Worldwide Locations

U.S.A
Sumitomo Machinery Corporation of America (SMA)
4200 Holland Blvd. Chesapeake,VA 23323,U.S.A.
TEL (1)757-485-3355 FAX (1)757-485-7490

Canada
SM Cyclo of Canada, Ltd. (SMC)
1453 Cornwall Road,Oakville, Canada ON L6J 7T5
TEL (1)905-469-1050 FAX (1)905-469-1055

Mexico
SM Cyclo de Mexico, S.A. de C.V. (SMME)
Av. Desarrollo 541, Col. Finsa, Guadalupe,
Nuevo León, México, CP67132
TEL (52)81-8144-5130 FAX (52)81-8144-5130

Brazil
Sumitomo Industrias Pesadas do Brasil Ltda. (SHIB)
Rodovia do Acucar (SP-075) Km 26
Itu, Sao Paulo, Brasil
TEL (55)11-4886-1000 FAX (55)11-4886-1000

Chile
SM Cyclo de Chile, Ltda. (SMCH)
San Pablo 3507, Quinta Normal, Santiago, Chile
TEL (56)2-892-7000 FAX (56)2-892-7001

Argentina
SM Cyclo de Argentina S.A. (SMAR)
Ing. Delpini, 2236Area de Promocion el Triangulo,
Partido Malvinas Argentinas Grand Bourg,
Buenos Aires, Argentina B1615KGB
TEL (54)3327-45-4095 FAX (54)3327-45-4099

Guatemala
SM Cyclo de Guatemala Ensambladora, Ltda. (SMGT)
Parque Industrial Unisur, 0 Calle B 19-50 Zona 3,
Bodega D-1 Delta Bárcenas en Villa Nueva, Guatemala
TEL (502)6648-0500 FAX (502)6631-9171

Colombia
SM Cyclo Colombia, S.A.S.
Carrera 11, No.93A-53, Office 203, Bogotá, Colombia
TEL (57)1-3000673

Germany
Sumitomo (SHI) Cyclo Drive Germany GmbH (SCG)
Cyclostraße 92, 85229 Markt Indersdorf, Germany
TEL (49)8136-66-0 FAX (49)8136-5771

Austria
Sumitomo (SHI) Cyclo Drive Germany GmbH (SCG)
SCG Branch Austria Office
Gruentalerstraße 30A, 4020 Linz, Austria
TEL (43)732-330958 FAX (43)732-331978

Belgium
Belgium, Netherlands, Luxemburg
Hansen Industrial Transmissions NV
Leonardo da Vincilaan 1-3
2650 Edegem, Belgium
TEL (32)3-450-12-11

France
SM-Cyclo France SAS (SMFR)
8 Avenue Christian Doppler, 77700 Serris, France
TEL (33)164171717 FAX (33)164171718

Italy
SM-Cyclo Italy Srl (SMIT)
Via dell' Artigianato 23, 20010 Cornaredo (MI), Italy
TEL (39)293-481101 FAX (39)293-481103

Spain
SM-Cyclo Iberia, S.L.U.
C/Gran Via n° 63 bis
planta primera, oficina 1B
48011 Bilbao - Vizcaya, Spain
TEL (34)944-805389

United Kingdom
SM-Cyclo UK Ltd. (SMUK)
Unit 29, Bergen Way, Sutton Fields Industrial Estate,
Kingston upon Hull, HU7 0YQ, East Yorkshire,
United Kingdom
TEL (44)1482-790340 FAX (44)1482-790321

Turkey
SM Cyclo Turkey Güç Aktarım Sis. Tic. Ltd. Sti. (SMTR)
Büyükdere Çayırbaşı Cd. Dede Yusuf Sk. No:11,
34453 Sarıyer Istanbul, Turkey
TEL (90)216-384-4482 FAX (90)216-384-4482

China
Sumitomo (SHI) Cyclo Drive China, Ltd. (SCT)
11F,SMEG Plaza, No.1386 Hongqiao Road,
Changning District, Shanghai, China (P.C.200336)
TEL (86)21-3462-7877 FAX (86)21-3462-7922

Hong Kong
SM-Cyclo of Hong Kong Co.,Ltd. (SMHK)
Rm 1301, CEO Tower, 77 Wing Hong Street,
Cheung Sha Wan, Kowloon, Hong Kong
TEL (852)2460-1881 FAX (852)2460-1882

Korea
Sumitomo (SHI) Cyclo Drive Korea, Ltd. (SCK)
Royal Bldg. 9F Rm.913, 5 Danju-Dong, Chongro-Ku,
Seoul, Korea 110-721
TEL (82)2-730-0151 FAX (82)2-730-0156

Taiwan
Tatung SM-Cyclo Co., Ltd. (TSC)
22 Chungshan N. Road 3rd., Sec. Taipei, Taiwan 104,
R.O.C.
TEL (886)2-2595-7275 FAX (886)2-2595-5594

Singapore
Sumitomo (SHI) Cyclo Drive Asia Pacific Pte. Ltd. (SCA)
15 Kwong Min Road, Singapore 628718
TEL (65)6591-7800 FAX (65)6863-4238

Philippines
Sumitomo (SHI) Cyclo Drive Asia Pacific Pte. Ltd. (SMPH)
C4 & C5 Bldg. Granville Industrial Complex
Governor's Drive, Bo. Bancal,
Carmona, Cavite 4116
Philippines
TEL (63)2-584-4921 FAX (63)2-584-4922
TEL (63)46-430-3591
TEL (63)46-482-0580
TEL (63)46-482-0581

Vietnam
SM-Cyclo (Vietnam) Co., Ltd. (SMVN)
Factory 2B, Lot K1-2-5,Road No.: 2-3-5A,
Le Minh Xuan Industrial Park, Binh Chanh Dist.,
HCMC, Vietnam.
TEL (84)8-37-663-709 FAX (84)8-37-663-710

Malaysia
SM-Cyclo of Malaysia Sdn. Bhd. (SMMA)
No.7C, Jalan Anggerik Mokara 31/56, Kota Kemuning,
Seksyen 31, 40460 Shah Alam, Selangor D.E., Malaysia
TEL (60)3-51210455 FAX (60)3-51210578

Indonesia
PT. SM-Cyclo Indonesia (SMID)
Cikarang Jalan Sungkai Blok F 25 No.09 K,
Delta Silicon III, Lippo Cikarang, Bekasi, Indonesia
TEL (62)21-2961-2100 FAX (62)21-2961-2211

Thailand
SM-Cyclo (Thailand) Co., Ltd. (SMTH)
195 Empire Tower, 21st Fl., Unit 2103-4, South Sathorn Rd.,
Yannawa Sathorn, Bangkok 10120, Thailand
TEL (66)2-670-0998 FAX (66)2-670-0999

Australia
Sumitomo (SHI) Hansen Australia Pty. Ltd. (SHAU)
181 Power Street Glendenning NSW 2761, Australia
TEL (61)2-9208-3000 FAX (61)2-9208-3050

India
Sumi-Cyclo Drive India Pvt. Ltd. (SMIN)
Survey No.130, Hissa No.02, Jeevan Nagar, Off Mumbai-Bangalore bypass, Tathawade, Pune-411 033, India
TEL (91)20-6674-2900 FAX (91)20-6674-2901

Japan
Sumitomo Heavy Industries, Ltd.
ThinkPark Tower, 1-1 Osaki 2-chome, Shinagawa-ku,
Tokyo 141-6025, Japan
TEL (81)3-6737-2511 FAX (81)3-6866-5160

Specifications, dimensions, and other items are subject to change without prior notice.

Sumitomo Heavy Industries, Ltd.
Power Transmission & Controls Group
Headquarter ThinkPark Tower, 1-1 Osaki 2-chome, Shinagawa-ku, Tokyo 141-6025, Japan

No.G2020E-2
EA03 Printed 2018.09

Sumitomo Drive Technologies

PARAMAX® 9000 Series

Industrial Gearbox

Sumitomo Drive Technologies

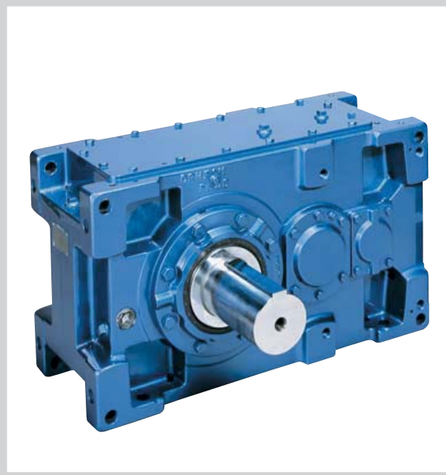

PARAMAX®
9000 Series
Industrial Gearbox

Sumitomo Heavy Industries, Ltd.

No.G2020E-2

A Features ··· A- 2

Available Combination ··· A- 4
Introduction of Application ··· A- 5
Introduction of Applied Product ··· A- 6

B Reducer

Standard Specifications ··· B- 2
Construction Drawing ··· B- 3
Nomenclature ··· B- 4
Selection ··· B- 6
Service Factor SF ··· B- 8
Selection Tables and Dimension Tables
Right Angle Shaft ··· B- 11
Parallel Shaft ··· B-101

C Technical Data

Lubricant and Installation ··· C- 2
Painting Specifications and Rust Proof Standard ··· C- 3
Moment of Inertia ··· C- 4
Supplementary Dimension Drawing ··· C- 12
Supplementary Matters to Hollow Shaft ··· C- 17
Hollow Shaft Related Dimensions ··· C- 18
Cooling Fan Dimension ··· C- 20
Option Dimension ··· C- 24

Features

JUST FIT SIZE

26 sizes variation for most accurate economical selection.

Prepared full range 26 sizes variation.
Fitness size selection available for every requested torque.
Customer's wide design availability with most accurate economical selection.

Size	Output Torque
9015	2.6
9025	4.2
9030	6.4
9035	8.5
9040	10.1
9045	13.2
9050	15.3
9055	19.9
9060	24.4

Size	Output Torque
9065	31.4
9070	38.2
9075	47.8
9080	58.5
9085	73.1
9090	85.9
9095	101
9100	122
9105	144

Size	Output Torque
9110	174
9115	207
9118	260
9121	301
9126	351
9128	420
9131	473
9136	552

【kNm】

LARGER THERMAL CAPACITY

Advanced thermal capacity by new designed fan cooling system. (Option)

New designed fan and conducted air cowling gain larger thermal capacity.
This system benefits for severe situation like continuous operation, even if compact size.

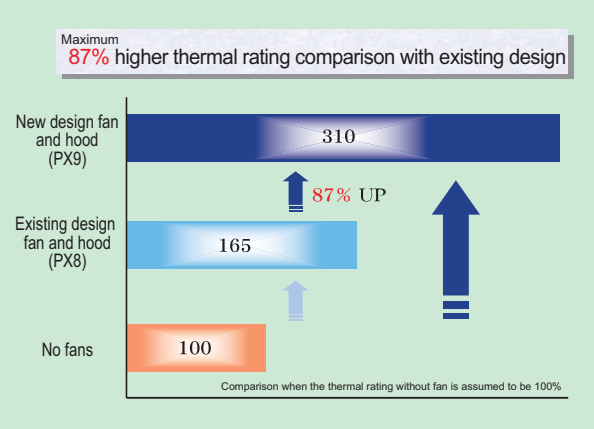

LOW NOISE

Low noise resulting from optimized gear tooth profile modification and rigid housing design.

FEM analysis used to maximize housing strength and rigidity, so maintaining correct gear alignment and bearing loading.

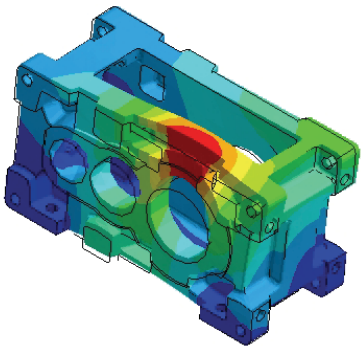

FEM Analysis

HIGH TOOTH STRENGTH

25 deg Pressure angle

In comparison with ordinary pressure angle (20 deg), 25 deg pressure angle permits a tooth form with thicker dedendum.
This translates into higher tooth strength rating, an essential feature for shock load applications.

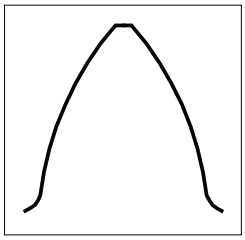

25 deg Pressure Angle

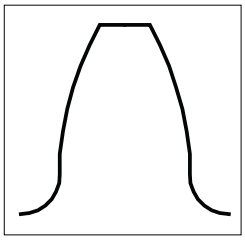

20 deg Pressure Angle

UNIVERSAL HOUSING

Horizontal, vertical or upright mounting - All use the same housing.

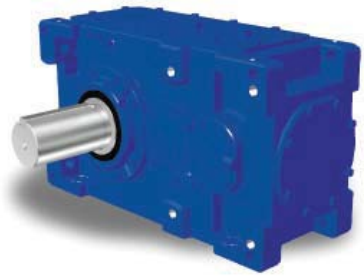

Horizontal mounting

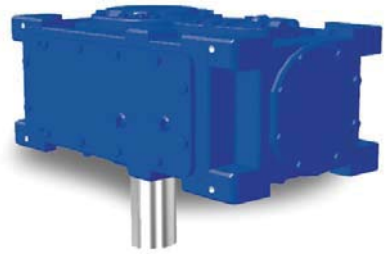

Vertical mounting

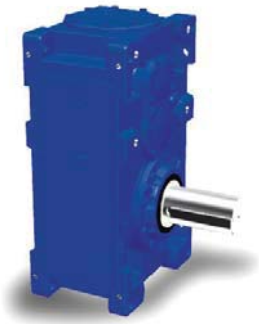

Upright mounting

AVAILABLE COMBINATION

Reducer

Size	Ratio	6.3	7.1	8	9	10	11.2	12.5	14	16	18	20	22.4	25	28	31.5	35.5	40	45	50	56	63	71
	9015	●	●	●	●	●	●	●	●	●	●	●	●	●	●	●	●	●	●				
	9025	●	●	●	●	●	●	●	●	●	●	●	●	●	●	●	●	●	●				
	9030	●	●	●	●	●	●	●	●	●	●	●	●	●	●	●	●	●	●	●	●	●	●
	9035			●	●	●	●	●	●	●	●	●	●	●	●	●	●	●	●	●	●	●	●
	9040	●	●	●	●	●	●	●	●	●	●	●	●	●	●	●	●	●	●	●	●	●	●
	9045			●	●	●	●	●	●	●	●	●	●	●	●	●	●	●	●	●	●	●	●
	9050	●	●	●	●	●	●	●	●	●	●	●	●	●	●	●	●	●	●	●	●	●	●
	9055			●	●	●	●	●	●	●	●	●	●	●	●	●	●	●	●	●	●	●	●
	9060	●	●	●	●	●	●	●	●	●	●	●	●	●	●	●	●	●	●	●	●	●	●
	9065			●	●	●	●	●	●	●	●	●	●	●	●	●	●	●	●	●	●	●	●
	9070	●	●	●	●	●	●	●	●	●	●	●	●	●	●	●	●	●	●	●	●	●	●
	9075			●	●	●	●	●	●	●	●	●	●	●	●	●	●	●	●	●	●	●	●
	9080	●	●	●	●	●	●	●	●	●	●	●	●	●	●	●	●	●	●	●	●	●	●
	9085			●	●	●	●	●	●	●	●	●	●	●	●	●	●	●	●	●	●	●	●
	9090	●	●	●	●	●	●	●	●	●	●	●	●	●	●	●	●	●	●	●	●	●	●
	9095		●	●	●	●	●	●	●	●	●	●	●	●	●	●	●	●	●	●	●	●	●
	9100	●	●	●	●	●	●	●	●	●	●	●	●	●	●	●	●	●	●	●	●	●	●
	9105		●	●	●	●	●	●	●	●	●	●	●	●	●	●	●	●	●	●	●	●	●
	9110	●	●	●	●	●	●	●	●	●	●	●	●	●	●	●	●	●	●	●	●	●	●
	9115		●	●	●	●	●	●	●	●	●	●	●	●	●	●	●	●	●	●	●	●	●
	9118													●		●	●	●	●	●	●	●	●
	9121														●	●	●	●	●	●	●	●	●
	9126														●	●	●	●	●	●	●	●	●
	9128														●	●	●	●	●	●	●	●	●
	9131												●	●	●	●	●	●	●	●	●	●	●
	9136												●	●	●	●	●	●	●	●	●	●	●

Size	Ratio	80	90	100	112	125	140	160	180	200	224	250	280	315	355	400	450	500
	9015																	
	9025																	
	9030	●	●	●	●	●	●	●	●	●	●							
	9035	●	●	●	●	●	●	●	●	●	●	●	●					
	9040	●	●	●	●	●	●	●	●	●	●							
	9045	●	●	●	●	●	●	●	●	●	●	●	●					
	9050	●	●	●	●	●	●	●	●	●	●	●	●	●	●	●		
	9055	●	●	●	●	●	●	●	●	●	●	●	●	●	●	●	●	●
	9060	●	●	●	●	●	●	●	●	●	●	●	●	●	●	●		
	9065	●	●	●	●	●	●	●	●	●	●	●	●	●	●	●	●	●
	9070	●	●	●	●	●	●	●	●	●	●	●	●	●	●	●		
	9075	●	●	●	●	●	●	●	●	●	●	●	●	●	●	●	●	●
	9080	●	●	●	●	●	●	●	●	●	●	●	●	●	●	●		
	9085	●	●	●	●	●	●	●	●	●	●	●	●	●	●	●	●	●
	9090	●	●	●	●	●	●	●	●	●	●	●	●	●	●	●		
	9095	●	●	●	●	●	●	●	●	●	●	●	●	●	●	●	●	
	9100	●	●	●	●	●	●	●	●	●	●	●	●	●	●	●		
	9105	●	●	●	●	●	●	●	●	●	●	●	●	●	●	●	●	
	9110	●	●	●	●	●	●	●	●	●	●	●	●	●	●	●		
	9115	●	●	●	●	●	●	●	●	●	●	●	●	●	●	●	●	
	9118	●	●	●	●	●	●	●	●	●	●	●	●	●	●	●	●	
	9121	●	●	●	●	●	●	●	●	●	●	●	●	●	●	●		
	9126	●	●	●	●	●	●	●	●	●	●	●	●	●	●	●		
	9128	●	●	●	●	●	●	●	●	●	●	●	●	●	●	●		
	9131	●	●	●	●	●	●	●	●	●	●	●	●	●				
	9136	●	●	●	●	●	●	●	●	●	●	●	●	●				

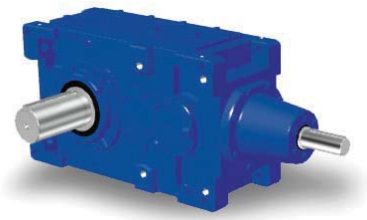

Reducer: Right Angle

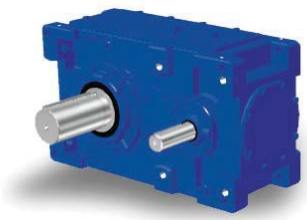

Reducer: Parallel

INTRODUCTION OF APPLICATION

With Motor

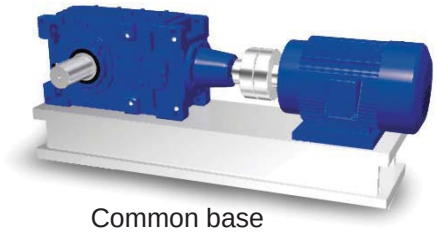

Common base

Drive unit right angle

Drive unit parallel

Double Stack

Top mount

Single stage

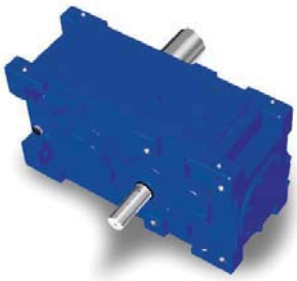

Reducer

Steel housing

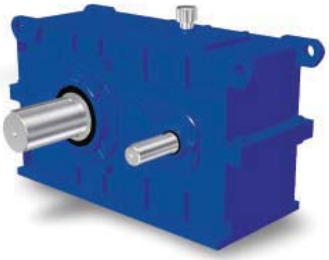

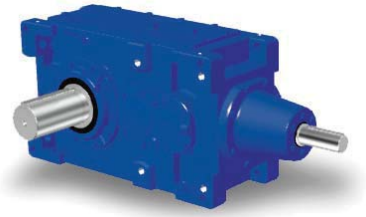

Right angle

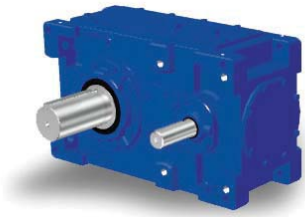

Parallel

Mounting

Upright mount

Upright wall mount

Special slow speed shaft

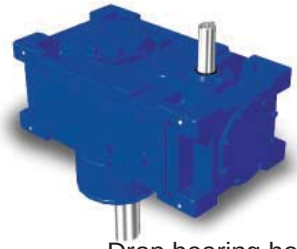

Drop bearing housing

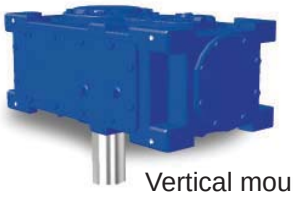

Vertical mount

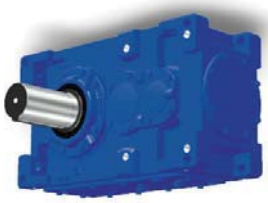

Ceiling mount

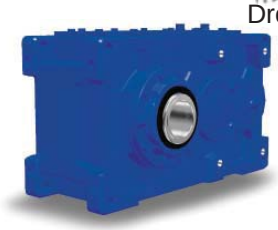

Hollow shaft

Introduction of Applied Product

M Series

●Output Torque
1.0～76.5kNm

Drive Units

●Output Torque
0.9～75.2kNm

SCC Series

●Output Torque
6.7～207kNm

SGD Series

●Output Torque
1.7～278kNm

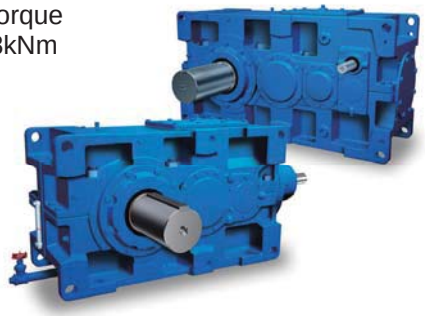

SEB Series

●Output Torque
1.3～36.3kNm

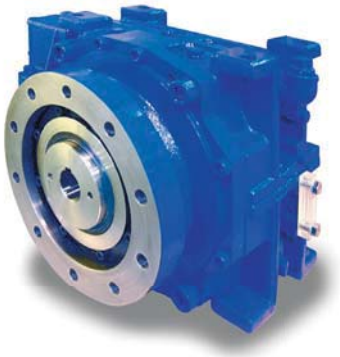

SAF Series

●Output Torque
1.5～39.2kNm

●Catalogue
No.H0156E

SFC Series

●Output Torque
10～44kNm

●Catalogue
No.G2201E

HEDCON

＜Standard＞

●Output Torque
0.8～77.4kNm

●Catalogue
No.W0101E

＜precision type＞

●Output Torque
0.8～20kNm

HEDCON with Cyclo

●Output Torque
2.8～20kNm

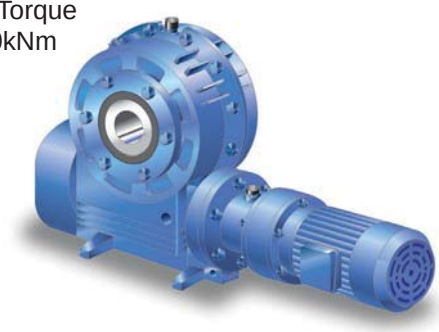

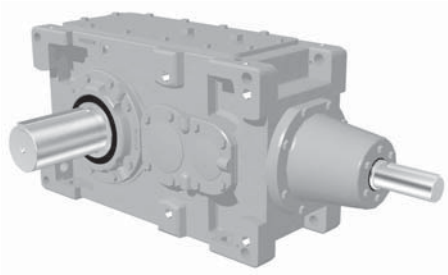

<Reducer: Right Angle Shaft Horizontal Mounting>

B

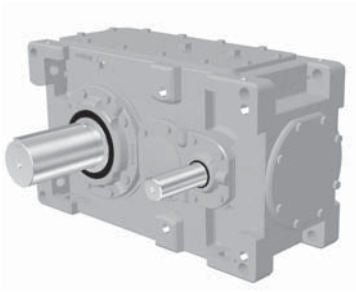

<Reducer: Parallel Shaft-Horizontal Mounting>

Reducer

Standard Specifications ··· B- 2
Construction Drawing ··· B- 3
Nomenclature ··· B- 4
Selection Flowchart and Formula for Selection ··· B- 6
Service Factor ··· B- 8
Right Angle Shaft ··· B- 11
Parallel Shaft ··· B-101

Reducer Standard Specifications

Item		Standard Specification		
		Mounting	High Speed Shaft Speed	
Reducer	Lubrication Method	Horizontal Shaft	750 ～ 1800r/min	Oil bath lubrication In case of high speed shaft speed is less than 750r/min, electric pump lubrication may be used. Consult SUMITOMO for details.
		Vertical Shaft	400 ～ 1800r/min	Pump lubrication (Two different pump lubrication systems are available; shaft connected pump lubrication and electric pump lubrication. For details, refer to the outline dimension drawing.)
		Upright Shaft	750 ～ 1800r/min	Oil bath lubrication Grease lubrication for right angle input shaft.
	Lubricant	Refer to the page C-2.		
	Gear Type	Involute external gear		
Ambient Conditions	Installation Location	Indoor (Minimal dust and humidity)		
	Ambient Temperature	－ 10℃～ 40℃ A cooling fan may be required depending on the usage (Note)		
	Ambient Humidity	Under 85%		
	Elevation	Under 1,000 meters		
	Atmosphere	Well ventilated location, free of corrosive gases, explosive gases, vapors and dust.		
Installation		Horizontal installation Refer to the page C-2		
Method of Coupling with Driven Machine		Coupling, gears, chain sprocket or belt.		
Painting		Surface preparation: Shot blasting after washing before machining Inside painting: UNI GROUND PTC primer is sprayed once Outside painting: For primer coating, UNI GROUND PTC primer is sprayed once. For final coating, NEORON #2000 is sprayed once. Painting color: Donau Blue (equivalent Munsell color: 6.5PB 3.6/8.2), Refer to the page C-3.		

Note : In general, a heating or cooling system is necessary when ambient temperature is lower than −10℃ or higher than 50℃.
e.g. High temperature gas or liquid passes through the hollow shaft.
Consult us when substances lower than –10℃ or higher than 50℃ will be in contact with PARAMAX DRIVES.

Reducer Construction Drawing

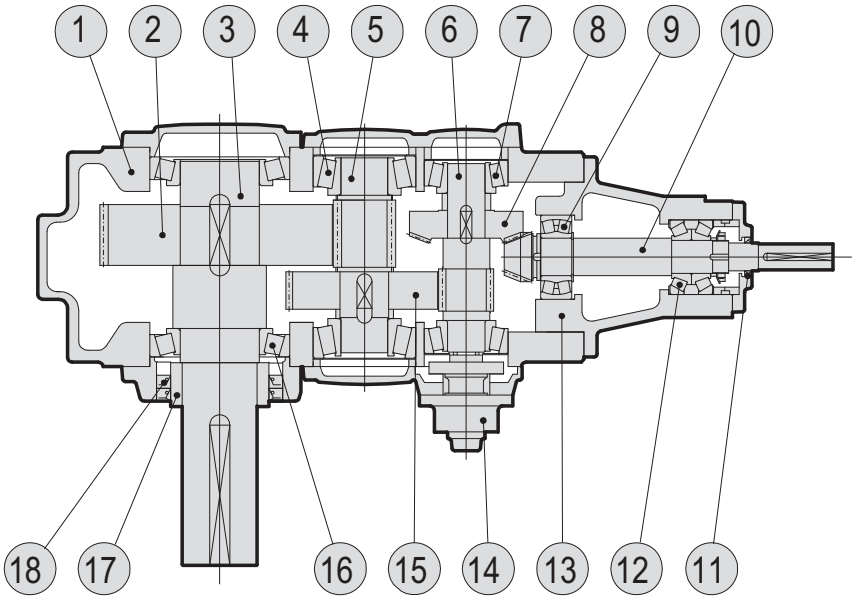

<Reducer: Right Angle Triple Reduction>

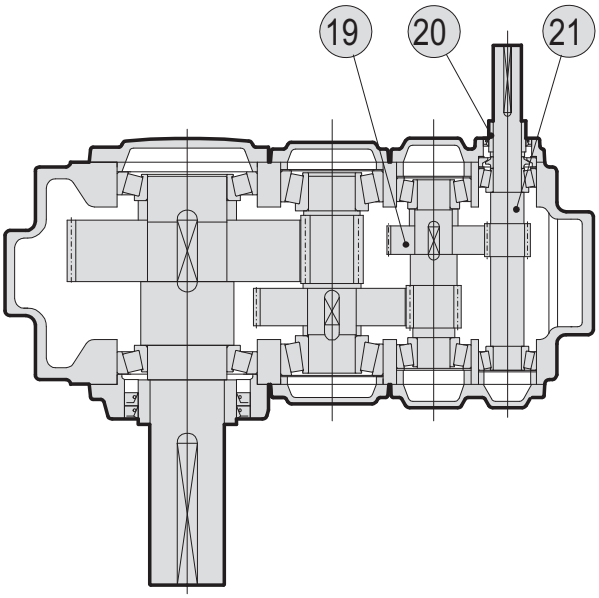

<Reducer: Parallel Shaft Triple Reduction>

Ref.No.	Part Name	Ref.No.	Part Name	Ref.No.	Part Name	Ref.No.	Part Name
1	Housing	7	Taper roller bearing	13	Bearing housing	19	Helical gear
2	Helical gear	8	Bevel gear	14	Oil pump	20	Collar
3	Slow speed shaft	9	Spherical roller bearing	15	Helical gear	21	Helical pinion shaft
4	Taper roller bearing	10	Bevel pinion shaft	16	Taper roller bearing		
5	Helical pinion shaft	11	Oil seal	17	Collar		
6	Helical pinion shaft	12	Taper roller bearing	18	Oil seal		

Reducer Nomenclature

P	H	D	9075	R	3
Series	Mounting	Housing	Size	Shaft Position	Number of Gear Stages

Series	Mounting	Housing	Size	Torque kNm	Shaft Position	Number of Gear Stages
P Paramax	H 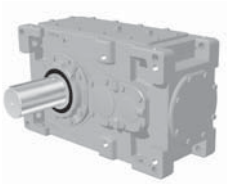 Horizontal	A Monoblock	9015	2.6	R 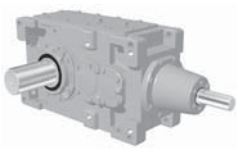 Right Angle	2 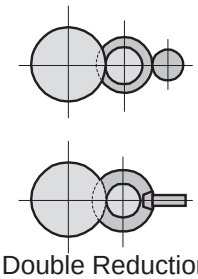 Double Reduction
			9025	4.2		
			9030	6.4		
			9035	8.5		
			9040	10.1		
			9045	13.2		
			9050	15.3		
			9055	19.9		
	V 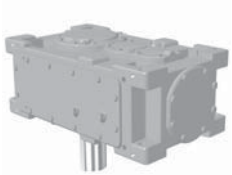 Vertical	D Split	9060	24.4		3 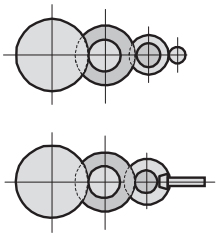 Triple Reduction
			9065	31.4		
			9070	38.2		
			9075	47.8		
			9080	58.5		
			9085	73.1	P 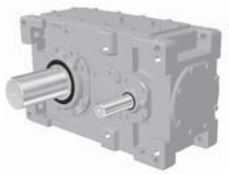 Parallel	
			9090	85.9		
			9095	101		
			9100	122		
			9105	144		4 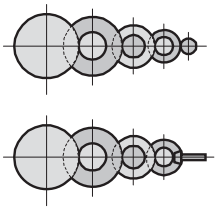 Quadruple Reduction
	W 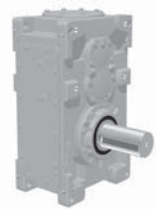 Upright		9110	174		
			9115	207		
			9118	260		
			9121	301		
			9126	351		
			9128	420		
			9131	473		
			9136	552		

1. For shaft arrangement, refer to the dimension sheets.
2. Consult us for reduction ratios smaller than 6.3.

[ ] — [RL] [K] [F] — [35.5]

Mounting for Upright	Shaft Arrangement	Slow Speed Shaft	Option	Nominal Ratio
(Blank) 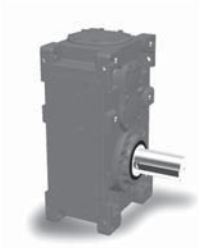	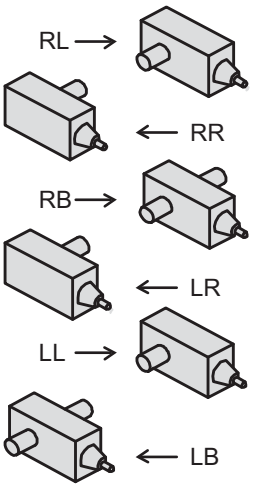	(Blank) 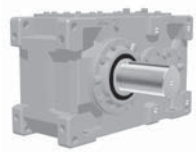 Solid Shaft	(Blank) 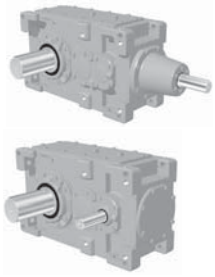 Without option	Right Angle Shaft: 6.3, 7.1, 8, 9, 10, 11.2, 12.5, 14, 16, 18, 20, 22.4, 25, 28, 31.5, 35.5, 40, 45, 50 / 56, 63, 71, 80, 90, 100, 112, 125, 140, 160, 180, 200, 224, 250, 280, 315, 355, 400, 450
		T 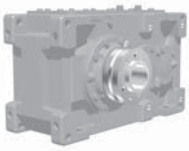 Hollow Shaft (Shrink Disk Type)	F 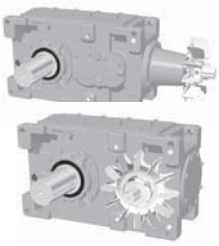 With fan	
W 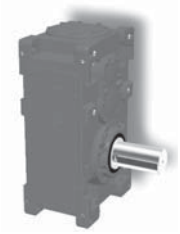 Wall Mount (Upright Mounting)	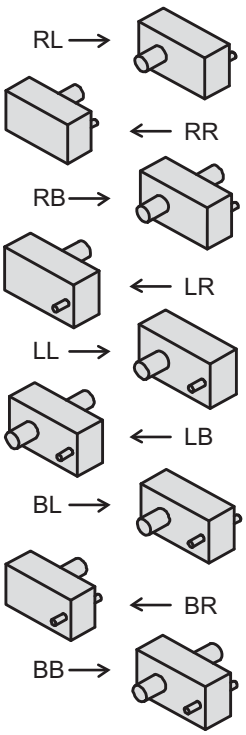	K 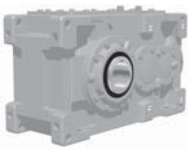 Hollow Shaft (Key Type)	B 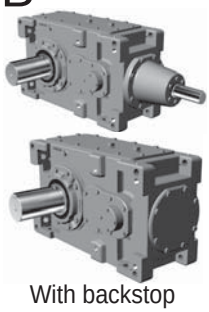 With backstop	Parallel Shaft: 6.3, 7.1, 8, 9, 10, 11.2, 12.5, 14, 16, 18, 20, 22.4, 25, 28, 31.5, 35.5, 40, 45, 50 / 56, 63, 71, 80, 90, 100, 112, 125, 140, 160, 180, 200, 224, 250, 280, 315, 355, 400, 450, 500
			FB 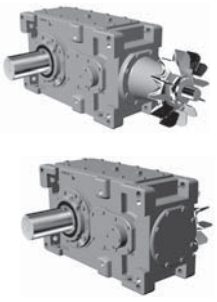 With fan & backstop	

Reducer Selection

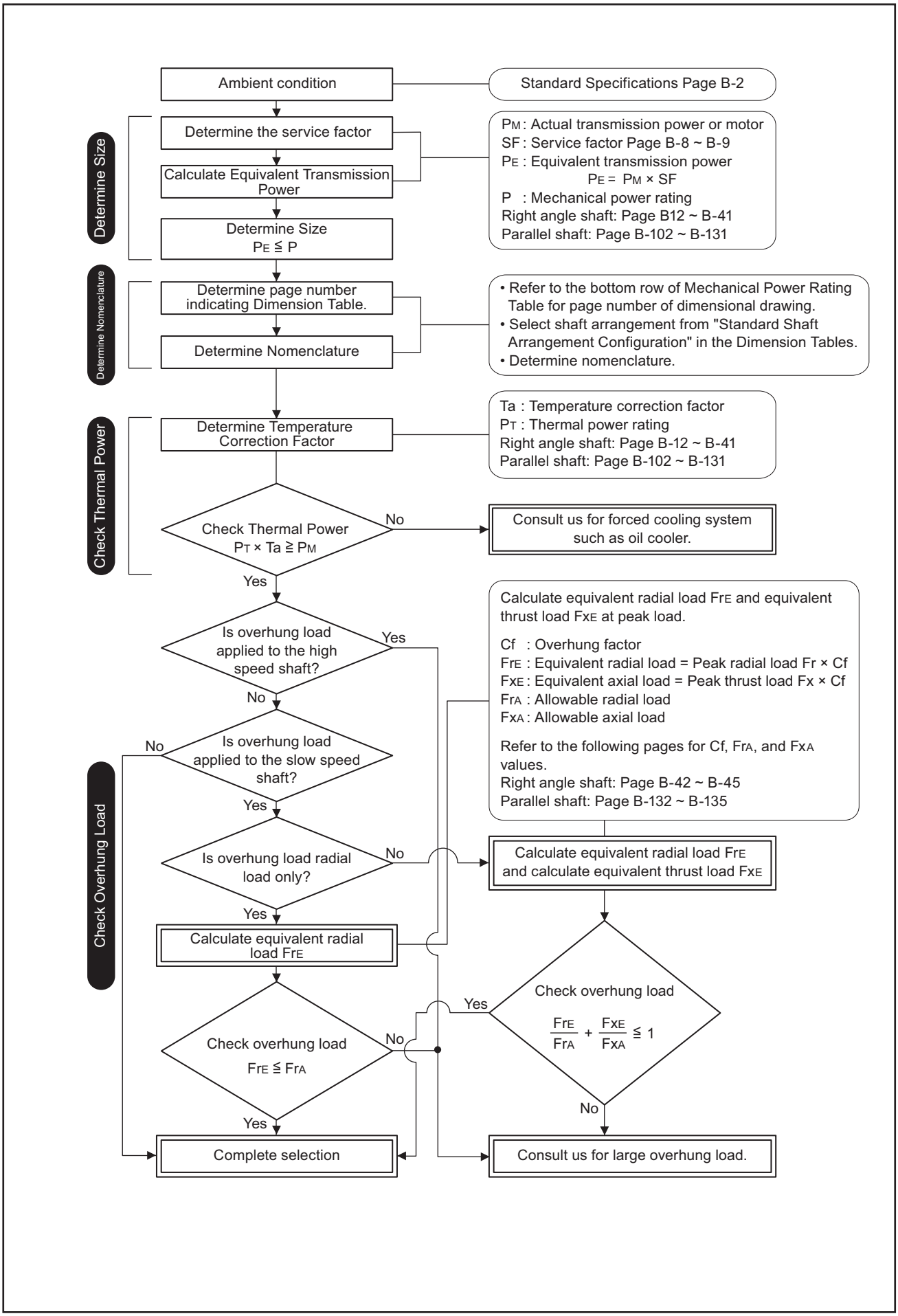

Reducer Selection Example

○ : Conditions ■ : Selected item		
○ Ambient condition ■ Check ambient condition	: Indoor, Ambient temperature 40℃ → OK	B-2 Standard Specifications
○ Motor power ○ High speed shaft speed ○ Shaft and mounting positions	: 55 kW : 1500 r/min : Right Angle Shaft・Horizontal Mounting	
Load Condition ○ Type of load, Operating hours ■ Determine service factor	: Uniform load・14 hours/day → SF = 1.25	B-8 Service Factor
■ Calculate equivalent transmission power	→ PE = 55 × 1.25 = 68.75 kW	
○ Slow speed shaft speed ■ Reduction ratio Select nominal reduction ratio	: 85 r/min → 1500/85 =17.6 → 17.6 → 18	B-4 ～B-5 Nomenclature
■ Determine size	→ Size 9035, Nominal Reduction Ratio 18 Mechanical power rating P = 72 kW PE ≦ P → OK	B-18 Selection Tables
■ Check dimension ■ Check shaft arrangement	→ RL	B-50 *1 Dimension Tables Standard shaft arrangement configuration in Dimension Tables
■ Check nomenclature	→ PHA9035R2-RLF-18	Nomenclature in Dimension Tables
○ Ambient temperature ■ Temperature correction factor without fan Ta ■ Thermal rating without fan PT	: 40℃ → Ta = 0.70 → P_T = 48kW → P_T × Ta = 33.6 < 55 = PM → OUT	B-18 Selection Tables B-18 Selection Tables Standard Specifications
■ Temperature correction factor with fan Ta ■ Thermal rating with fan PT	→ Ta = 0.73 → P_T = 120kW → P_T × Ta = 87.6 > 55 = PM → OK → With fan	B-18 Selection Tables
Check overhung load ○ Overhung load to high speed shaft ○ Overhung member ■ Overhang factor Cf ○ Radial load position and direction ○ Peark radial load Fr ○ Peark thrust load Fx ■ Equivalent radial load F_{rE} ■ Allowable radial load	: No load : Sprocket (Single row) → Cf = 1.0 : Center of solid shaft, Downward : 10.6 kN : 0 kN → F_{rE} = 10.6 × 1.0 = 10.6 → 29.4 kN	B-42 Allowable External Load B-42 Allowable External Load
10.6 ≦ 29.4	→ OK	
■ Complete selection Selected model	→ PHA9035R2-RLF-18	

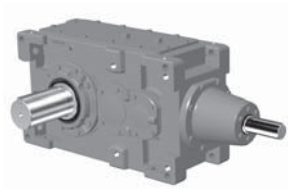

*1 Page number of the relevant Dimension Table is indicated in the Selection Table.

Service Factor SF

Driven Machine	Operating Hours (hours/day) 3 hrs	10 hrs	24 hrs
CRANES			
Classification of Crane / Hoisting / Traverse Motion / Travel Motion / Slewing Motion / Boom Hoisting			
Group Ⅰ / 1.00 / 1.50 / 1.25 / 1.00			
Group Ⅱ / 1.25 / 1.50 / 1.00			
Group Ⅲ / 1.50 / 1.75 / 1.25			
Group Ⅳ / 1.75 / 2.00 / 1.50			
The crane classification is based on JIS B8821-1976 "Calculation standard for the structure of crane."			
CONVEYORS (General purpose)			
Uniformly load or fed	1.00	1.00	1.25
Heavy load			
Not uniformly fed	1.00	1.25	1.50
Reciprocating or shaker	1.50	1.75	2.00
ELEVATORS			
Elevators	1.50	1.50	1.50
Escalators	1.25	1.25	1.25
METAL MILLS			
Draw bench carriage and main drive	1.50	1.50	1.50
Runout table			
Non reversing			
Group drives	1.50	1.50	1.50
Individual drivers	2.00	2.00	2.00
Reversing	2.00	2.00	2.00
Slab pushers	1.50	1.50	1.50
Shears	2.00	2.00	2.00
Wire drawing	1.25	1.25	1.25
Wire winding machine	1.25	1.50	1.50
METAL STRIP PROCESSING MACHINERY			
Bridles	1.50	1.50	1.50
Coilers & uncoilers	1.00	1.25	1.50
Edge trimmers	1.00	1.25	1.50
Flatteners	1.25	1.25	1.50
Loopers (Accumulators)	1.50	1.50	2.00
Pinch rolls	1.25	1.25	1.50
Scrap choppers	2.00	2.00	2.00
Shears	2.00	2.00	2.00
Slitters	1.00	1.25	1.50
MILL, ROTARY TYPE			
Ball and rod	2.00	2.00	2.00
Cement Kilns	2.00	2.00	2.00
Kilns (Except cement kilns)	1.50	1.50	1.50
Dryers and coolers	1.50	1.50	1.50
SEWAGE DISPOSAL EQUIPMENT			
Aerators	2.00	2.00	2.00
Bar screens	1.25	1.25	1.25
Chemical feeders	1.25	1.25	1.25
Dewatering screens	1.50	1.50	1.50
Scum breakers	1.50	1.50	1.50
Slow or rapid mixers	1.50	1.50	1.50
Sludge collectors	1.25	1.25	1.25
Thickeners	1.50	1.50	1.50
Vacuum filters	1.50	1.50	1.50
EXTRUDERS			
Plastics	1.25	1.25	1.25
Rubber	1.50	1.50	1.50
FEEDERS			
Apron	1.00	1.25	1.50
Belt	1.00	1.25	1.50
Disk	1.00	1.00	1.25
Reciprocating	1.50	1.75	2.00
Screw	1.00	1.25	1.50

Driven Machine	Operating Hours (hours/day) 3 hrs	10 hrs	24 hrs
RUBBER INDUSTRY			
Mixers	1.75	1.75	2.00
Mixing mill -2 smooth rolls	1.50	1.50	1.75
Batch drop mill -2 smooth rolls	1.50	1.50	1.50
Cracker warmer			
-2 roll: 1 corrugated roll	1.75	1.75	1.75
Cracker -2 corrugated rolls	2.00	2.00	2.00
Holding, feed and blend mill			
-2 rolls	1.25	1.25	1.25
Refiner -2 rolls	1.50	1.50	1.50
Calenders	1.50	1.50	1.50
PAPER MILL			
All types incl. Paper making machine	2.00	2.00	2.00
AGITATORS AND MIXERS			
Pure liquids	1.00	1.00	1.25
Liquids and solids	1.00	1.25	1.50
Liquids variable density	1.00	1.25	1.50
MIXERS			
Concrete	1.25	1.25	1.50
CRUSHER			
Stone or ore	2.50	2.50	2.50
BLOWERS			
Centrifugal	1.00	1.00	1.25
Lobe	1.00	1.25	1.50
Vane	1.00	1.25	1.50
COMPRESSORS			
Centrifugal	1.00	1.00	1.25
Lobe	1.00	1.25	1.50
Reciprocating: multi cylinder	1.50	1.50	1.75
Reciprocating: single cylinder	1.75	1.75	2.00
FANS			
Centrifugal	1.00	1.00	1.25
Cooling towers	※	※	※
Forced draft	1.25	1.25	1.25
Suction draft	1.50	1.50	1.50
Industrial and mine	1.50	1.50	1.50
PUMPS			
Centrifugal	1.00	1.00	1.25
Screw pump	1.25	1.25	1.50
Gear pump	1.25	1.25	1.50
DREDGES			
Cable reels	1.25	1.25	1.50
Conveyors	1.25	1.25	1.50
Cutter head drive	2.00	2.00	2.00
Pumps	2.00	2.00	2.00
Screen drives	1.75	1.75	2.00
Stackers	1.25	1.25	1.50
Winches	1.25	1.25	1.50
GENERATORS AND EXCITERS	1.00	1.00	1.25
HAMMER MILLS	1.75	1.75	2.00
SUGAR INDUSTRY			
Beet slicer	2.00	2.00	2.00
Cane knives	1.50	1.50	1.50
Crushers	1.50	1.50	1.50
Mills (Slow speed end)	1.75	1.75	1.75

Notes:
(1) Values in the above table are based on AGMA standards and SUMITOMO's experience.
(2) Values in the above table apply for electric motors as prime movers - if prime mover is a multi cylinder combustion engine, 0.25 has to be added to the SF.
(3) Consult us for special duty or when special safety specifications are needed.
(4) ※ : For SF, consult us.

Reducer Service Factor SF

Refer to the following for driven machines not shown on the left page.

Prime Mover	Operating Hours	Type of Load		
		Uniform Load	Moderate Shock Load	Heavy Shock Load
		U	M	H
Electric Motor	3 hours/day	1.00	1.00	1.50
	10 hours/day	1.00	1.25	1.75
	24 hours/day	1.25	1.50	2.00
Internal Combustion Engine (multi cylinder)	3 hours/day	1.00	1.25	1.75
	10 hours/day	1.25	1.50	2.00
	24 hours/day	1.50	1.75	2.25

Note: Consult us when the operating hours are less than 3 hours/day or when an internal combustion engine (single cylinder) is used.

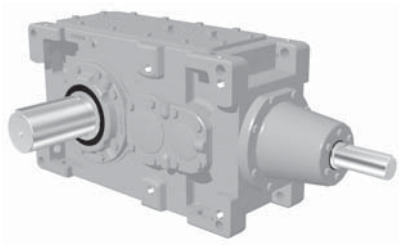

<Reducer: Right Angle Shaft-Horizontal Mounting>

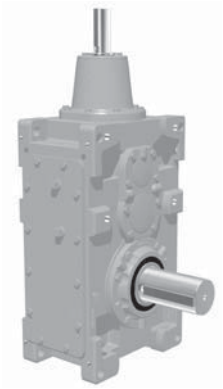

<Reducer: Right Angle Shaft Upright Mounting>

B

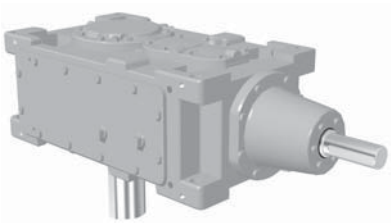

<Reducer: Right Angle Shaft Vertical Mounting>

Reducer: Right Angle

Selection Tables ··· B- 12
Allowable Loads ··· B- 42
Dimension Sheets ··· B- 46

SELECTION Right Angle Shaft Double Reduction Nominal Reduction Ratio 6.3 ▶ 8

MECHANICAL POWER RATING (kW)

Nominal Reduction Ratio	H.Speed Shaft Speed r/min	L.Speed Shaft Speed r/min	Size of Reducer 9015	9025	9030	9035	9040	9045	9050	9055	9060	9065	9070	9075	9080	9085	9090
6.3	Exact Reduction Ratio		6.265	6.049	6.539		6.405		6.384		6.188		6.188		6.286		
	1800	**286**	74	98	152		236		334		568		798		1020※		
	1500	**238**	62	81	127		197		279		475		667		857		
	1200	**190**	49	65	102		158		224		381		535		688		
	1000	**159**	41	54	85		132		187		318		447		575		
	900	**143**	37	49	76		119		168		287		403		518		
	750	**119**	31	41	64		99		141		240		337		433		
7.1	Exact Reduction Ratio		7.246	6.903	7.049		7.309		7.268		7.210		6.933		6.933		
	1800	**254**	62	98	152		228		334		559		798		1020※		
	1500	**211**	52	81	127		191		279		469		667		857		
	1200	**169**	42	65	102		153		224		377		535		688		
	1000	**141**	35	54	85		128		187		316		447		575		
	900	**127**	31	49	76		116		168		285		403		518		
	750	**106**	26.5	41	64		97		141		238		337		433		
8	Exact Reduction Ratio		7.889	8.056	8.118	8.150	7.778	8.144	8.125		7.875	7.759	8.082		8.190		
	1800	**225**	57	76	140	152	217	236	340		544	568	810		1150※		
	1500	**188**	47	63	117	127	181	197	285		467	475	705		1010		
	1200	**150**	38	51	94	102	145	158	229		374	381	568		834		
	1000	**125**	31	42	78	85	120	132	191		312	318	476		699		
	900	**113**	28.6	38	71	76	108	119	173		280	287	429		630		
	750	**94**	23.8	31	59	64	90	99	144		234	240	359		528		
Dimension Tables		Horizontal	B-46	B-46	B-46	B-46	B-46	B-46	B-46		B-48	B-48	B-48		B-48		
		Vertical	B-72	B-72	B-72	B-72	B-72	B-72	B-72		B-74	B-74	B-74		B-74		
		Upright	B-88	B-88	B-88	B-88	B-88	B-88	B-88		B-90	B-90	B-90		B-90		

THERMAL POWER RATING (kW)

Nominal Reduction Ratio	H.Speed Shaft Speed r/min	Number of Cooling Fans	Size of Reducer 9015	9025	9030	9035	9040	9045	9050	9055	9060	9065	9070	9075	9080	9085	9090
Double Reduction Horizontal Type 6.3 ▼ 8	**1800**	-	30	39	46	61	73	88	79		108	134	138		160		
		1	75	105	124	171	217	261	233		332	414	372		561		
	1500	-	31	40	49	64	77	92	86		118	146	154		183		
		1	68	95	117	160	203	243	224		326	402	369		574		
	1200	-	31	40	50	66	79	95	90		126	154	165		200		
		1	60	84	106	145	184	223	208		307	376	351		557		
	1000	-	30	39	50	65	78	95	91		128	156	169		207		
		1	52	73	94	128	163	198	186		276	337	319		511		
	900	-	29	39	50	65	78	94	91		128	156	169		209		
		1	48	69	89	121	154	187	178		265	323	306		493		
	750	-	28	37	48	63	76	92	89		127	154	169		209		
		1	42	60	79	107	137	167	159		239	290	278		449		
Double Reduction Vertical Type 6.3 ▼ 8	**1800**	-	30	39	46	61	73	88	79		108	134	138		160		
		1	75	105	124	171	217	261	233		332	414	372		561		
	1500	-	31	40	49	64	77	92	86		118	146	154		183		
		1	68	95	117	160	203	243	224		326	402	369		574		
	1200	-	31	40	50	66	79	95	90		126	154	165		200		
		1	60	84	106	145	184	223	208		307	376	351		557		
	1000	-	30	39	50	65	78	95	91		128	156	169		207		
		1	52	73	94	128	163	198	186		276	337	319		511		
	900	-	29	39	50	65	78	94	91		128	156	169		209		
		1	48	69	89	121	154	187	178		265	323	306		493		
	750	-	28	37	48	63	76	92	89		127	154	169		409		
		1	42	60	79	107	137	167	159		239	290	278		449		
Double Reduction Upright Type 6.3 ▼ 8	**1800**	-	24	31	37	49	58	70	64		86	107	110		128		
		1	60	84	99	137	174	209	186		266	331	297		449		
	1500	-	25	32	39	51	61	74	69		95	117	123		146		
		1	54	76	93	128	162	195	179		260	321	295		459		
	1200	-	24	32	40	52	63	76	72		100	123	132		160		
		1	48	67	85	116	147	178	166		245	301	281		446		
	1000	-	24	31	40	52	63	76	73		102	125	135		166		
		1	41	58	75	102	130	158	149		221	270	255		408		
	900	-	23	31	40	52	62	75	72		102	125	136		167		
		1	39	55	71	97	124	150	142		212	258	245		395		
	750	-	23	30	39	50	61	74	71		101	123	135		167		
		1	34	48	63	86	110	133	128		191	232	222		360		

SELECTION Right Angle Shaft Double Reduction Nominal Reduction Ratio 6.3 ▶ 8

Size of Reducer 9095 9100 9105 9110 9115 9118 9121 9126 9128 9131 9136	L.Speed Shaft Speed r/min	H.Speed Shaft Speed r/min	Nominal Reduction Ratio
	Exact Reduction Ratio		
	286	**1800**	**6.3**
	238	**1500**	
	190	**1200**	
	159	**1000**	
	143	**900**	
	119	**750**	
	Exact Reduction Ratio		
	254	**1800**	**7.1**
	211	**1500**	
	169	**1200**	
	141	**1000**	
	127	**900**	
	106	**750**	
	Exact Reduction Ratio		
	225	**1800**	**8**
	188	**1500**	
	150	**1200**	
	125	**1000**	
	113	**900**	
	94	**750**	
	Horizontal Vertical Upright	Dimension Tables	

Notes

1. For ※ marked values, the forced oil lubrication is required at continuous operation.

2. Consult us when the high speed shaft speed is over 1800r/min.

3. When the high speed shaft speed is not shown in the table, find it by the interpolation method.

4. When the high speed shaft speed (N) is lower than 750r/min, find the mechanical power rating (P_N) according to the following formula.

$$P_N = P_{750} \times \frac{N}{750}$$

5. Shown in the table are the ratings for the slow speed shaft.

6. Refer to B42-B45 for the allowable radial and axial load on each shaft.

Size of Reducer 9095 9100 9105 9110 9115 9118 9121 9126 9128 9131 9136	Number of Cooling Fans	H.Speed Shaft Speed r/min	Nominal Reduction Ratio
	-	**1800**	Double Reduction Horizontal Type 6.3 ▼ 8
	1		
	-	**1500**	
	1		
	-	**1200**	
	1		
	-	**1000**	
	1		
	-	**900**	
	1		
	-	**750**	
	1		
	-	**1800**	Double Reduction Vertical Type 6.3 ▼ 8
	1		
	-	**1500**	
	1		
	-	**1200**	
	1		
	-	**1000**	
	1		
	-	**900**	
	1		
	-	**750**	
	1		
	-	**1800**	Double Reduction Upright Type 6.3 ▼ 8
	1		
	-	**1500**	
	1		
	-	**1200**	
	1		
	-	**1000**	
	1		
	-	**900**	
	1		
	-	**750**	
	1		

Ambient Temperature °C	Temperature Correction Factor	
	Without Fan	With Fan
20	1.00	1.00
30	0.85	0.87
40	0.70	0.73
50	0.55	0.60

Notes

1. Shown in the table are the ratings for models without a fan cooling unit and those with a fan. (-: none fan, 1: with a fan)

2. The values are applicable to continuous operation at ambient temperatures of 20 °C or less. When the temperature is out of the range, refer to the temperature correction factor shown above.

3. When the high speed shaft speed is not shown in the table, find it by interpolation method.

SELECTION Right Angle Shaft Double Reduction Nominal Reduction Ratio 9 ▶ 11.2

MECHANICAL POWER RATING (kW)

Nominal Reduction Ratio	H.Speed Shaft Speed r/min	L.Speed Shaft Speed r/min	Size of Reducer 9015	9025	9030	9035	9040	9045	9050	9055	9060	9065	9070	9075	9080	9085	9090
9	Exact Reduction Ratio		9.125	9.192	8.750	8.861	8.875	9.265	9.250	8.938	9.176	8.874	9.056	8.597	9.034		
	1800	200	49	76	126	152	188	236	280	334	443	568	704	798	1070※		
	1500	167	41	63	105	127	158	197	234	279	371	475	590	667	897		
	1200	133	33	51	85	102	127	158	188	224	298	381	474	535	722		
	1000	111	28.0	42	71	85	106	132	158	187	250	318	397	447	605		
	900	100	25.3	38	64	76	95	119	142	168	225	287	358	403	546		
	750	83	21.1	31	53	64	80	99	119	141	188	240	300	337	457		
10	Exact Reduction Ratio		10.040	9.899	10.303	10.118	10.171	9.889	10.000	10.125	9.995	9.875	10.125	10.007	9.882	9.982	
	1800	180	43	72	111	143	161	217	278	351	434	546	677	810	1000※	1150※	
	1500	150	36	60	92	119	134	181	232	297	362	469	567	713	863	1010	
	1200	120	29.1	48	74	95	107	145	187	237	289	375	456	577	695	867	
	1000	100	24.3	40	62	79	89	120	156	198	241	313	382	482	582	736	
	900	90	21.9	36	55	71	80	108	141	178	217	281	344	435	525	663	
	750	75	18.2	30	46	59	67	90	118	148	181	234	288	363	439	553	
11.2	Exact Reduction Ratio		11.614	11.295	11.106	11.000	11.606	11.250	11.385	11.375	11.647	11.294	11.345	11.229	10.900	10.961	
	1800	161	39	63	100	133	145	198	229	293	351	462	565	747	892※	1120※	
	1500	134	33	52	83	111	121	166	191	245	294	387	473	626	748	938	
	1200	107	26.5	42	67	89	97	133	154	197	236	311	381	504	602	756	
	1000	89	22.1	35	56	75	81	111	129	165	198	260	319	421	504	633	
	900	80	19.9	31	50	67	73	100	116	149	178	235	287	380	454	571	
	750	67	16.7	26.6	42	56	61	84	97	124	149	196	240	318	380	478	
Dimension Tables		Horizontal	B-46	B-46	B-46	B-46	B-46	B-46	B-46	B-46	B-48	B-48	B-48	B-48	B-48	B-48	
		Vertical	B-72	B-72	B-72	B-72	B-72	B-72	B-72	B-72	B-74	B-74	B-74	B-74	B-74	B-74	
		Upright	B-88	B-88	B-88	B-88	B-88	B-88	B-88	B-88	B-90	B-90	B-90	B-90	B-90	B-90	

THERMAL POWER RATING (kW)

Speed Reducer

Selection Tables

Dimension Tables

Nominal Reduction Ratio	H.Speed Shaft Speed r/min	Number of Cooling Fans	Size of Reducer 9015	9025	9030	9035	9040	9045	9050	9055	9060	9065	9070	9075	9080	9085	9090
Double Reduction Horizontal Type 9 ▼ 11.2	1800	-	27	36	44	56	69	82	78	99	109	130	142	173	164	203	
		1	67	96	118	156	205	244	227	290	337	402	382	467	577	715	
	1500	-	27	36	46	58	71	85	82	105	116	141	153	188	183	226	
		1	59	86	109	144	187	225	214	274	319	388	368	452	575	708	
	1200	-	26	36	46	59	71	86	84	108	120	147	160	198	195	242	
		1	52	76	98	129	166	202	195	250	292	359	341	422	543	673	
	1000	-	26	35	46	58	70	85	84	108	120	148	161	200	199	248	
		1	44	66	85	113	145	177	173	222	260	320	305	379	491	610	
	900	-	25	34	45	57	69	84	84	108	119	148	161	200	200	249	
		1	41	62	81	107	137	167	164	211	247	306	291	363	471	586	
	750	-	24	33	44	56	66	82	82	105	117	146	158	198	198	247	
		1	36	54	71	95	120	149	146	188	221	275	261	326	425	531	
Double Reduction Vertical Type 9 ▼ 11.2	1800	-	27	36	44	56	69	82	78	99	109	130	142	173	164	203	
		1	67	96	118	156	205	244	227	290	337	402	382	467	577	715	
	1500	-	27	36	46	58	71	85	82	105	116	141	153	188	183	226	
		1	59	86	109	144	187	225	214	274	319	388	368	452	575	708	
	1200	-	26	36	46	59	71	86	84	108	120	147	160	198	195	242	
		1	52	76	98	129	166	202	195	250	292	359	341	422	543	673	
	1000	-	26	35	46	58	70	85	84	108	120	148	161	200	199	248	
		1	44	66	85	113	145	177	173	222	260	320	305	379	491	610	
	900	-	25	34	45	57	69	84	84	108	119	148	161	200	200	249	
		1	41	62	81	107	137	167	164	211	247	306	291	363	471	586	
	750	-	24	33	44	56	66	82	82	105	117	146	158	198	198	247	
		1	36	54	71	95	120	149	146	188	221	275	261	326	425	531	
Double Reduction Upright Type 9 ▼ 11.2	1800	-	22	29	35	45	55	66	62	79	87	104	113	138	131	163	
		1	53	76	95	125	164	195	182	232	270	321	306	373	461	572	
	1500	-	22	29	37	46	57	68	66	84	93	113	123	151	147	181	
		1	47	69	87	115	150	180	171	219	255	310	295	362	460	567	
	1200	-	21	29	37	47	57	69	68	86	96	118	128	158	156	194	
		1	41	61	78	104	133	161	156	200	234	287	273	338	434	538	
	1000	-	20	28	36	46	56	68	67	87	96	118	129	160	159	198	
		1	35	52	68	91	116	141	138	178	208	256	244	303	392	488	
	900	-	20	28	36	46	55	67	67	86	96	118	129	160	160	199	
		1	33	49	64	86	109	134	131	169	198	245	233	290	377	469	
	750	-	19	26	35	45	53	66	65	84	94	117	127	158	158	198	
		1	29	43	57	76	96	119	117	151	176	220	209	261	340	425	

SELECTION Right Angle Shaft Double Reduction Nominal Reduction Ratio 9 ▶ 11.2

Size of Reducer 9095	9100	9105	9110	9115	9118	9121	9126	9128	9131	9136	L.Speed Shaft Speed r/min	H.Speed Shaft Speed r/min	Nominal Reduction Ratio
9.000		9.000		8.947							Exact Reduction Ratio		9
1550※		1880※		2800※							**200**	**1800**	
1350※		1660※		2460※							**167**	**1500**	
1120※		1420※		2110※							**133**	**1200**	
964※		1250※		1850※							**111**	**1000**	
882※		1160※		1720※							**100**	**900**	
756※		998※		1500※							**83**	**750**	
9.765		9.765		10.235							Exact Reduction Ratio		10
1460※		1880※		2800※							**180**	**1800**	
1280※		1660※		2460※							**150**	**1500**	
1060※		1420※		2060※							**120**	**1200**	
911※		1250※		1770※							**100**	**1000**	
834※		1160※		1620※							**90**	**900**	
716※		998※		1390※							**75**	**750**	
11.382		11.382		11.302							Exact Reduction Ratio		11.2
1230※		1570※		2430※							**161**	**1800**	
1050※		1380※		2140※							**134**	**1500**	
877※		1180※		1780※							**107**	**1200**	
752※		1040※		1520※							**89**	**1000**	
688※		971※		1390※							**80**	**900**	
590※		833※		1200※							**67**	**750**	
B-50		B-50		B-50							Horizontal Vertical Upright	Dimension Tables	

Notes

1. For ※ marked values, the forced oil lubrication is required at continuous operation.
2. Consult us when the high speed shaft speed is over 1800r/min.
3. When the high speed shaft speed is not shown in the table, find it by the interpolation method.
4. When the high speed shaft speed (N) is lower than 750r/min, find the mechanical power rating (P_N) according to the following formula.

$$P_N = P_{750} \times \frac{N}{750}$$

5. Shown in the table are the ratings for the slow speed shaft.
6. Refer to B42-B45 for the allowable radial and axial load on each shaft.

Size of Reducer 9095	9100	9105	9110	9115	9118	9121	9126	9128	9131	9136	Number of Cooling Fans	H.Speed Shaft Speed r/min	Nominal Reduction Ratio
490											-	**1800**	Double Reduction Horizontal Type 9 ▼ 11.2
200 538		560		570							1 -	**1500**	
220 525		270 599		590							1 -	**1200**	
210 444		280 551		320 600							1 -	**1000**	
210 425		270 508		330 593							1 -	**900**	
190 350		250 429		320 523							1 -	**750**	
											-	**1800**	Double Reduction Vertical Type 9 ▼ 11.2
											1 -	**1500**	
											1 -	**1200**	
											1 -	**1000**	
											1 -	**900**	
											1 -	**750**	
											-	**1800**	Double Reduction Upright Type 9 ▼ 11.2
											1 -	**1500**	
											1 -	**1200**	
											1 -	**1000**	
											1 -	**900**	
											1 -	**750**	

Ambient Temperature ℃	Temperature Correction Factor Without Fan	With Fan
20	1.00	1.00
30	0.85	0.87
40	0.70	0.73
50	0.55	0.60

Notes

1. Shown in the table are the ratings for models without a fan cooling unit and those with a fan. (-: none fan, 1: with a fan)
2. The values are applicable to continuous operation at ambient temperatures of 20 °C or less. When the temperature is out of the range, refer to the temperature correction factor shown above.
3. When the high speed shaft speed is not shown in the table, find it by interpolation method.

SELECTION Right Angle Shaft Double Reduction Nominal Reduction Ratio 12.5 ▶ 16

MECHANICAL POWER RATING (kW)

Nominal Reduction Ratio	H.Speed Shaft Speed r/min	L.Speed Shaft Speed r/min	Size of Reducer 9015	9025	9030	9035	9040	9045	9050	9055	9060	9065	9070	9075	9080	9085	9090
12.5	Exact Reduction Ratio		12.162	12.020	12.545	12.842	12.727	12.932	12.188	12.462	12.469	12.534	12.797	12.536	12.923	12.044	
	1800	**144**	36	58	89	111	122	161	225	284	322	435	512	700	732※	1000※	
	1500	**120**	30	48	74	93	102	134	188	237	269	362	428	598	612	863	
	1200	**96**	24.2	39	59	74	82	107	150	189	216	290	343	482	491	715	
	1000	**80**	20.1	32	49	62	68	89	125	158	180	242	286	403	410	600	
	900	**72**	18.1	29.3	44	55	61	80	112	142	162	217	258	364	369	540	
	750	**60**	15.1	24.4	37	46	51	67	94	118	136	181	215	304	308	450	
14	Exact Reduction Ratio		14.068	13.716	13.523	13.962	14.523	14.712	13.875	14.000	14.529	14.335	14.338	14.067	14.253	13.225	
	1800	**129**	32	51	82	105	116	152	188	239	283	366	450	600	688※	933※	
	1500	**107**	27.3	43	69	88	97	126	158	200	237	306	377	502	576	782	
	1200	**86**	21.9	34	55	71	78	101	127	161	190	246	303	404	463	629	
	1000	**71**	18.3	28.7	46	59	65	84	106	134	159	206	253	338	388	527	
	900	**64**	16.5	25.8	41	53	58	76	95	121	143	186	228	305	350	475	
	750	**54**	13.8	21.5	34	44	49	63	80	101	120	155	191	255	292	398	
16	Exact Reduction Ratio		15.778	15.988	16.235	15.636	15.556	16.182	15.881	15.188	15.392	15.635	15.750	15.844	16.000	15.750	
	1800	**113**	27.1	42	67	89	96	122	169	226	261	322	373	512	545※	732※	
	1500	**94**	22.6	35	56	74	80	102	141	188	218	269	311	428	455	612	
	1200	**75**	18.1	28.5	45	59	64	82	113	150	175	216	250	343	365	491	
	1000	**63**	15.1	23.7	37	49	54	68	94	125	146	180	208	286	305	410	
	900	**56**	13.5	21.4	33	44	48	61	84	113	131	162	188	258	275	369	
	750	**47**	11.3	17.8	28.2	37	40	51	70	94	109	136	157	215	229	308	
Dimension Tables		Horizontal	B-46	B-46	B-46	B-46	B-46	B-46	B-46	B-46	B-48	B-48	B-48	B-48	B-48	B-48	
		Vertical	B-72	B-72	B-72	B-72	B-72	B-72	B-72	B-72	B-74	B-74	B-74	B-74	B-74	B-74	
		Upright	B-88	B-88	B-88	B-88	B-88	B-88	B-88	B-88	B-90	B-90	B-90	B-90	B-90	B-90	

THERMAL POWER RATING (kW)

Nominal Reduction Ratio	H.Speed Shaft Speed r/min	Number of Cooling Fans	Size of Reducer 9015	9025	9030	9035	9040	9045	9050	9055	9060	9065	9070	9075	9080	9085	9090
Double Reduction Horizontal Type 12.5 ▼ 16	**1800**	-	23	33	41	54	63	79	73	96	101	130	137	175	172	208	
		1	57	88	110	150	187	235	214	282	312	402	369	472	607	731	
	1500	-	23	33	41	55	63	79	74	98	103	133	140	180	178	224	
		1	50	77	98	137	166	209	192	256	283	366	336	433	558	702	
	1200	-	22	31	40	55	61	78	73	98	103	134	140	181	180	230	
		1	42	66	85	121	144	183	169	227	250	327	298	387	500	641	
	1000	-	21	30	39	54	59	76	71	96	101	132	138	179	178	229	
		1	36	56	73	105	123	158	146	198	218	286	260	339	438	565	
	900	-	20	29	38	53	58	74	70	95	99	130	136	177	176	227	
		1	33	52	68	99	115	147	137	186	205	269	245	321	414	535	
	750	-	19	28	36	51	55	71	67	92	95	126	131	172	171	221	
		1	28	45	59	86	100	129	120	164	180	237	216	284	367	475	
Double Reduction Vertical Type 12.5 ▼ 16	**1800**	-	23	33	41	54	63	79	73	96	101	130	137	175	172	208	
		1	57	88	110	150	187	235	214	282	312	402	369	472	607	731	
	1500	-	23	33	41	55	63	79	74	98	103	133	140	180	178	224	
		1	50	77	98	137	166	209	192	256	283	366	336	433	558	702	
	1200	-	22	31	40	55	61	78	73	98	103	134	140	181	180	230	
		1	42	66	85	121	144	183	169	227	250	327	298	387	500	641	
	1000	-	21	30	39	54	59	76	71	96	101	132	138	179	178	229	
		1	36	56	73	105	123	158	146	198	218	286	260	339	438	565	
	900	-	20	29	38	53	58	74	70	95	99	130	136	177	176	227	
		1	33	52	68	99	115	147	137	186	205	269	245	321	414	535	
	750	-	19	28	36	51	55	71	67	92	95	126	131	172	171	221	
		1	28	45	59	86	100	129	120	164	180	237	216	284	367	475	
Double Reduction Upright Type 12.5 ▼ 16	**1800**	-	18	26	33	43	50	63	58	77	81	104	109	140	138	166	
		1	46	70	88	120	150	188	171	225	250	321	295	378	485	585	
	1500	-	18	26	33	44	50	63	59	79	82	106	112	144	142	179	
		1	40	62	79	109	133	167	154	205	227	293	269	346	446	562	
	1200	-	17	25	32	44	49	62	58	79	82	107	112	145	144	184	
		1	34	53	68	97	115	146	135	182	200	262	239	310	400	513	
	1000	-	17	24	31	43	47	61	57	77	80	106	110	144	142	183	
		1	29	45	58	84	99	126	117	158	174	228	208	271	350	452	
	900	-	16	23	30	42	46	59	56	76	79	104	108	142	141	182	
		1	27	42	55	79	92	118	110	149	164	215	196	257	331	428	
	750	-	15	22	29	40	44	57	54	73	76	101	105	138	137	177	
		1	23	36	47	69	80	103	96	131	144	190	173	227	293	380	

SELECTION Right Angle Shaft Double Reduction Nominal Reduction Ratio 12.5 ▶ 16

Size of Reducer											L.Speed Shaft Speed r/min	H.Speed Shaft Speed r/min	Nominal Reduction Ratio
9095	9100	9105	9110	9115	9118	9121	9126	9128	9131	9136			
12.349		12.349		12.929							Exact Reduction Ratio		
1180※		1570※		2310※							**144**	**1800**	
1010※		1380※		1980※							**120**	**1500**	
840※		1180※		1640※							**96**	**1200**	**12.5**
721※		1040※		1410※							**80**	**1000**	
660※		971※		1290※							**72**	**900**	
566※		830※		1110※							**60**	**750**	
14.143		14.344		14.260							Exact Reduction Ratio		
993※		1280※		1980※							**129**	**1800**	
852※		1130※		1700※							**107**	**1500**	
706※		966※		1410※							**86**	**1200**	**14**
605※		850※		1210※							**71**	**1000**	
554※		790※		1110※							**64**	**900**	
475※		678※		952※							**54**	**750**	
15.345		15.562		16.312							Exact Reduction Ratio		
953※		1280※		1840※							**113**	**1800**	
817※		1130※		1580※							**94**	**1500**	
678※		966※		1310※							**75**	**1200**	**16**
581※		850※		1120※							**63**	**1000**	
532※		790※		1020※							**56**	**900**	
456※		662※		883※							**47**	**750**	
B-50		B-50		B-50							Horizontal Vertical Upright	Dimension Tables	

Notes

1. For ※ marked values, the forced oil lubrication is required at continuous operation.
2. Consult us when the high speed shaft speed is over 1800r/min.
3. When the high speed shaft speed is not shown in the table, find it by the interpolation method.
4. When the high speed shaft speed (N) is lower than 750r/min, find the mechanical power rating (P_N) according to the following formula.

$$P_N = P_{750} \times \frac{N}{750}$$

5. Shown in the table are the ratings for the slow speed shaft.
6. Refer to B42-B45 for the allowable radial and axial load on each shaft.

Size of Reducer											Number of Cooling Fans	H.Speed Shaft Speed r/min	Nominal Reduction Ratio
9095	9100	9105	9110	9115	9118	9121	9126	9128	9131	9136			
490											- 1	**1800**	Double Reduction Horizontal Type 12.5 ▼ 16
200 538		560		570							- 1	**1500**	
220 525		270 599		590							- 1	**1200**	
210 444		280 551		320 600							- 1	**1000**	
210 425		270 508		330 593							- 1	**900**	
190 350		250 429		320 523							- 1	**750**	
											- 1	**1800**	Double Reduction Vertical Type 12.5 ▼ 16
											- 1	**1500**	
											- 1	**1200**	
											- 1	**1000**	
											- 1	**900**	
											- 1	**750**	
											- 1	**1800**	Double Reduction Upright Type 12.5 ▼ 16
											- 1	**1500**	
											- 1	**1200**	
											- 1	**1000**	
											- 1	**900**	
											- 1	**750**	

Ambient Temperature ℃	Temperature Correction Factor	
	Without Fan	With Fan
20	1.00	1.00
30	0.85	0.87
40	0.70	0.73
50	0.55	0.60

Notes

1. Shown in the table are the ratings for models without a fan cooling unit and those with a fan. (-: none fan, 1: with a fan)
2. The values are applicable to continuous operation at ambient temperatures of 20 °C or less. When the temperature is out of the range, refer to the temperature correction factor shown above.
3. When the high speed shaft speed is not shown in the table, find it by interpolation method.

SELECTION Right Angle Shaft Double Reduction Nominal Reduction Ratio 18 ▶ 22.4

MECHANICAL POWER RATING (kW)

Nominal Reduction Ratio	H.Speed Shaft Speed r/min	L.Speed Shaft Speed r/min	Size of Reducer 9015	9025	9030	9035	9040	9045	9050	9055	9060	9065	9070	9075	9080	9085	9090
18	Exact Reduction Ratio		18.250	18.243	17.500	17.000	17.750	18.409	18.080	17.063	17.936	17.882	17.647	17.779	17.647	17.294	
	1800	100	25.3	37	64	86	95	117	145	197	230	295	368	478	545※	719※	
	1500	83	21.1	31	53	72	79	98	122	165	193	247	308	400	455	602	
	1200	67	17.0	25.1	43	57	63	78	98	132	155	198	247	321	365	484	
	1000	56	14.2	20.9	36	48	53	65	81	111	129	166	207	269	305	405	
	900	50	12.8	18.9	32	43	47	58	73	100	116	149	186	242	275	366	
	750	42	10.7	15.7	27.1	36	39	49	61	83	97	125	156	203	229	306	
20	Exact Reduction Ratio					20.235		19.778		19.790		19.301		19.500		19.500	
	1800	90			*	67	*	96	*	170	*	261	*	373	*	545※	
	1500	75			*	56	*	80	*	141	*	218	*	311	*	455	
	1200	60			*	45	*	64	*	113	*	175	*	250	*	365	
	1000	50			*	37	*	54	*	94	*	146	*	208	*	305	
	900	45			*	33	*	48	*	85	*	131	*	188	*	275	
	750	38			*	28.2	*	40	*	70	*	109	*	157	*	229	
22.4	Exact Reduction Ratio					22.000		22.500		22.233		22.075		21.882		21.412	
	1800	80			*	65	*	95	*	152	*	240	*	373	*	545※	
	1500	67			*	54	*	79	*	127	*	201	*	311	*	455	
	1200	54			*	43	*	63	*	102	*	161	*	250	*	365	
	1000	45			*	36	*	53	*	85	*	135	*	208	*	305	
	900	40			*	32	*	47	*	77	*	121	*	188	*	275	
	750	33			*	27.4	*	39	*	64	*	101	*	157	*	229	
Dimension Tables		Horizontal	B-46	B-46	B-46	B-46	B-46	B-46	B-46	B-46	B-48	B-48	B-48	B-48	B-48	B-48	
		Vertical	B-72	B-72	B-72	B-72	B-72	B-72	B-72	B-72	B-74	B-74	B-74	B-74	B-74	B-74	
		Upright	B-88	B-88	B-88	B-88	B-88	B-88	B-88	B-88	B-90	B-90	B-90	B-90	B-90	B-90	

THERMAL POWER RATING (kW)

Speed Reducer

Selection Tables

Dimension Tables

Nominal Reduction Ratio	H.Speed Shaft Speed r/min	Number of Cooling Fans	Size of Reducer 9015	9025	9030	9035	9040	9045	9050	9055	9060	9065	9070	9075	9080	9085	9090
Double Reduction Horizontal Type 18 ▼ 22.4	1800	-	22	32	40	49	56	69	73	89	103	119	139	165	175	209	
		1	55	85	108	136	165	205	213	259	317	368	375	445	617	736	
	1500	-	22	31	40	48	55	69	74	89	104	120	142	167	181	213	
		1	48	74	96	120	146	182	192	231	287	330	341	401	567	668	
	1200	-	21	30	39	47	54	67	73	87	104	119	142	165	183	213	
		1	41	64	83	103	127	157	169	201	254	290	303	353	507	593	
	1000	-	20	29	38	45	53	64	71	84	102	116	140	162	181	210	
		1	35	54	71	88	110	133	146	173	220	251	264	306	445	517	
	900	-	19	28	37	44	52	63	70	83	100	114	138	159	178	207	
		1	32	50	67	82	103	125	137	162	207	236	249	288	421	487	
	750	-	18	27	35	42	50	60	67	79	97	109	133	154	173	200	
		1	27	43	58	71	90	109	120	141	182	205	219	253	372	430	
Double Reduction Vertical Type 18 ▼ 22.4	1800	-	22	32	40	49	53	69	73	89	103	119	139	165	175	209	
		1	55	85	108	136	157	205	213	259	317	368	375	445	617	736	
	1500	-	22	31	40	48	53	69	74	89	104	120	142	167	181	213	
		1	48	74	96	120	141	182	192	231	287	330	341	401	567	668	
	1200	-	21	30	39	47	53	67	73	87	104	119	142	165	183	213	
		1	41	64	83	103	124	157	169	201	254	290	303	353	507	593	
	1000	-	20	29	38	45	52	64	71	84	102	116	140	162	181	210	
		1	35	54	71	88	107	133	146	173	220	251	264	306	445	517	
	900	-	19	28	37	44	51	63	70	83	100	114	138	159	178	207	
		1	32	50	67	82	101	125	137	162	207	236	249	288	421	487	
	750	-	18	27	35	42	49	60	67	79	97	109	133	154	173	200	
		1	27	43	58	71	88	109	120	141	182	205	219	253	372	430	
Double Reduction Upright Type 18 ▼ 22.4	1800	-	18	25	32	39	44	55	58	71	82	95	111	132	140	167	
		1	44	68	87	109	132	164	171	207	254	294	300	356	494	589	
	1500	-	17	25	32	39	44	55	59	71	84	96	114	133	145	171	
		1	38	60	77	96	117	146	154	185	230	264	273	321	453	535	
	1200	-	17	24	32	37	43	54	58	70	83	95	114	132	146	170	
		1	33	51	67	82	102	126	135	161	203	232	242	282	406	474	
	1000	-	16	23	30	36	42	51	57	68	82	93	112	130	144	168	
		1	28	43	57	70	88	106	116	138	176	201	211	245	356	413	
	900	-	15	23	30	35	41	50	56	66	80	91	110	127	143	165	
		1	26	40	53	66	82	100	109	130	166	189	199	230	336	390	
	750	-	15	21	28	33	40	48	54	63	77	87	107	123	139	160	
		1	22	35	46	57	72	87	96	113	146	164	176	202	298	344	

SELECTION Right Angle Shaft Double Reduction Nominal Reduction Ratio 18 ▶ 22.4

Size of Reducer											L.Speed Shaft Speed r/min	H.Speed Shaft Speed r/min	Nominal Reduction Ratio
9095	9100	9105	9110	9115	9118	9121	9126	9128	9131	9136			
17.625		18.000		17.895							Exact Reduction Ratio		
803※		1040※		1590※							**100**	**1800**	
689※		918※		1370※							**83**	**1500**	
571※		785※		1130※							**67**	**1200**	**18**
490※		691※		975※							**56**	**1000**	
448※		642※		892※							**50**	**900**	
384※		551※		765※							**42**	**750**	
19.123		19.529		20.471							Exact Reduction Ratio		
771※		1040※		1480※							**90**	**1800**	
662※		918※		1270※							**75**	**1500**	
548※		785※		1050※							**60**	**1200**	**20**
470※		691※		905※							**50**	**1000**	
431※		634※		829※							**45**	**900**	
369※		530※		711※							**38**	**750**	
											Exact Reduction Ratio		
*		*		*							**80**	**1800**	
*		*		*							**67**	**1500**	
*		*		*							**54**	**1200**	**22.4**
*		*		*							**45**	**1000**	
*		*		*							**40**	**900**	
*		*		*							**33**	**750**	
B-50		B-50		B-50							Horizontal Vertical Upright	Dimension Tables	

*Marked models are triple reduction units. Refer to B-20 and B-21.

Notes

1. For ※ marked values, the forced oil lubrication is required at continuous operation.

2. Consult us when the high speed shaft speed is over 1800r/min.

3. When the high speed shaft speed is not shown in the table, find it by the interpolation method.

4. When the high speed shaft speed (N) is lower than 750r/min, find the mechanical power rating (P_N) according to the following formula.

$$P_N = P_{750} \times \frac{N}{750}$$

5. Shown in the table are the ratings for the slow speed shaft.

6. Refer to B42-B45 for the allowable radial and axial load on each shaft.

Size of Reducer											Number of Cooling Fans	H.Speed Shaft Speed r/min	Nominal Reduction Ratio
9095	9100	9105	9110	9115	9118	9121	9126	9128	9131	9136			
490											-	**1800**	Double Reduction Horizontal Type 18 ▼ 22.4
200											1		
538		560		570							-	**1500**	
220		270									1		
525		599		590							-	**1200**	
210		280		320							1		
444		551		600							-	**1000**	
210		270		330							1		
425		508		593							-	**900**	
190		250		320							1		
350		429		523							-	**750**	
											1		
											-	**1800**	Double Reduction Vertical Type 18 ▼ 22.4
											1		
											-	**1500**	
											1		
											-	**1200**	
											1		
											-	**1000**	
											1		
											-	**900**	
											1		
											-	**750**	
											1		
											-	**1800**	Double Reduction Upright Type 18 ▼ 22.4
											1		
											-	**1500**	
											1		
											-	**1200**	
											1		
											-	**1000**	
											1		
											-	**900**	
											1		
											-	**750**	
											1		

Ambient Temperature ℃	Temperature Correction Factor	
	Without Fan	With Fan
20	1.00	1.00
30	0.85	0.87
40	0.70	0.73
50	0.55	0.60

Notes

1. Shown in the table are the ratings for models without a fan cooling unit and those with a fan. (-: none fan, 1: with a fan)

2. The values are applicable to continuous operation at ambient temperatures of 20 °C or less. When the temperature is out of the range, refer to the temperature correction factor shown above.

3. When the high speed shaft speed is not shown in the table, find it by interpolation method.

SELECTION Right Angle Shaft Triple Reduction Nominal Reduction Ratio 20 ▶ 25

MECHANICAL POWER RATING (kW)

Nominal Reduction Ratio	H.Speed Shaft Speed r/min	L.Speed Shaft Speed r/min	Size of Reducer 9015	9025	9030	9035	9040	9045	9050	9055	9060	9065	9070	9075	9080	9085	9090
20	Exact Reduction Ratio				20.091		19.620		19.790		19.181		19.950		20.206		20.548
	1800	90			61	*	81	*	124	*	194	*	295	*	516	*	735
	1500	75			51	*	67	*	103	*	162	*	246	*	431	*	616
	1200	60			41	*	54	*	83	*	130	*	198	*	346	*	495
	1000	50			34	*	45	*	69	*	108	*	165	*	289	*	413
	900	45			31	*	40	*	62	*	97	*	149	*	261	*	373
	750	38			26.1	*	34	*	52	*	81	*	124	*	218	*	311
22.4	Exact Reduction Ratio				21.656		22.388		22.530		22.351		22.353		22.286		22.353
	1800	80			55	*	81	*	124	*	194	*	295	*	476	*	696
	1500	67			46	*	67	*	103	*	162	*	246	*	398	*	582
	1200	54			37	*	54	*	83	*	130	*	198	*	320	*	468
	1000	45			31	*	45	*	69	*	108	*	165	*	268	*	391
	900	40			28.1	*	40	*	62	*	97	*	149	*	241	*	353
	750	33			23.5	*	34	*	52	*	81	*	124	*	202	*	295
25	Exact Reduction Ratio				25.137	25.041	24.444		25.935	24.662	25.137		24.938		24.630	24.626	25.685
	1800	72			49	64	80		117	124	193		295		453	516	625
	1500	60			41	54	67		98	103	162		246		379	431	528
	1200	48			33	43	53		78	83	130		198		304	346	424
	1000	40			27.8	36	45		65	69	108		165		254	289	355
	900	36			25.0	32	40		59	62	97		149		229	261	320
	750	30			20.9	27.3	33		49	52	81		124		192	218	267
Dimension Tables		Horizontal			B-52	B-52	B-52		B-52	B-52	B-54		B-54		B-54	B-54	B-56
		Vertical			B-76	B-76	B-76		B-76	B-76	B-78		B-78		B-78	B-78	B-80
		Upright			B-92	B-92	B-92		B-92	B-92	B-94		B-94		B-94	B-94	

THERMAL POWER RATING (kW)

Nominal Reduction Ratio	H.Speed Shaft Speed r/min	Number of Cooling Fans	Size of Reducer 9015	9025	9030	9035	9040	9045	9050	9055	9060	9065	9070	9075	9080	9085	9090
Triple Reduction Horizontal Type 20 ▼ 25	1800	-			34	43	53		61	77	84		113		138	172	213
		1			65	86	93		141	178	177		214		368	459	510
	1500	-			34	43	53		61	77	85		115		144	178	220
		1			58	77	83		126	159	160		195		340	421	468
	1200	-			33	43	52		60	76	85		115		146	180	222
		1			51	67	72		111	139	141		173		307	377	419
	1000	-			33	42	50		59	74	83		114		145	178	220
		1			44	58	62		96	120	122		151		271	332	369
	900	-			32	41	49		58	73	82		112		144	176	218
		1			42	54	58		90	113	115		143		257	314	350
	750	-			31	39	47		56	70	79		109		141	172	213
		1			36	47	50		79	99	102		126		229	279	311
Triple Reduction Vertical Type 20 ▼ 25	1800	-			31	41	51		57	73	79		105		126	159	181
		1			61	81	89		133	169	166		200		336	422	433
	1500	-			32	42	51		59	74	81		109		135	168	195
		1			55	74	80		121	153	152		185		319	397	416
	1200	-			32	41	51		59	74	82		111		140	172	205
		1			49	65	70		107	135	136		167		293	362	386
	1000	-			32	41	49		58	72	81		111		141	173	207
		1			43	56	60		93	117	119		147		262	321	346
	900	-			31	40	48		57	71	80		110		140	172	207
		1			40	53	57		88	110	113		139		250	306	331
	750	-			30	38	46		55	69	78		107		138	169	205
		1			36	47	50		78	97	100		124		224	273	298
Triple Reduction Upright Type 20 ▼ 25	1800	-			34	43	55		61	77	84		113		138	172	
		1			65	86	96		141	178	177		214		368	459	
	1500	-			34	43	55		61	77	85		115		144	178	
		1			58	77	85		126	159	160		195		340	421	
	1200	-			33	43	54		60	76	85		115		146	180	
		1			51	67	74		111	139	141		173		307	377	
	1000	-			33	42	52		59	74	83		114		145	178	
		1			44	58	64		96	120	122		151		271	332	
	900	-			32	41	51		58	73	82		112		144	176	
		1			42	54	60		90	113	115		143		257	314	
	750	-			31	39	49		56	70	79		109		141	172	
		1			36	47	52		79	99	102		126		229	279	

SELECTION Right Angle Shaft Triple Reduction Nominal Reduction Ratio 20 ▶ 25

Size of Reducer 9095	9100	9105	9110	9115	9118	9121	9126	9128	9131	9136	L.Speed Shaft Speed r/min	H.Speed Shaft Speed r/min	Nominal Reduction Ratio
	20.504		19.608								Exact Reduction Ratio		
*	992※	*	1520※	*							**90**	**1800**	
*	829	*	1270	*							**75**	**1500**	
*	666	*	1020	*							**60**	**1200**	**20**
*	556	*	856	*							**50**	**1000**	
*	501	*	772	*							**45**	**900**	
*	419	*	645	*							**38**	**750**	
22.800	22.004	22.444	22.499	22.222							Exact Reduction Ratio		
735	992※	992※	1360※	1520※							**80**	**1800**	
616	829	829	1160	1270							**67**	**1500**	
495	666	666	936	1020							**54**	**1200**	**22.4**
413	556	556	783	856							**45**	**1000**	
373	501	501	706	772							**40**	**900**	
311	419	419	591	645							**33**	**750**	
24.737	25.271	24.351	24.166	25.421	24.837						Exact Reduction Ratio		
714	912※	992※	1270※	1360※	1520※						**72**	**1800**	
613	763	829	1090	1170	1270						**60**	**1500**	
495	613	666	910	970	1020						**48**	**1200**	**25**
413	513	556	771	827	856						**40**	**1000**	
373	462	501	696	746	772						**36**	**900**	
311	386	419	582	624	645						**30**	**750**	
B-56	B-56	B-56	B-56	B-56	B-58						Horizontal	Dimension Tables	
B-80	B-80	B-80	B-80	B-80							Vertical		
											Upright		

*marked models are double reduction units. Refer to B-18 and B-19.

Notes

1. For ※ marked values, the forced oil lubrication is required at continuous operation.

2. Consult us when the high speed shaft speed is over 1800r/min.

3. When the high speed shaft speed is not shown in the table, find it by the interpolation method.

4. When the high speed shaft speed (N) is lower than 750r/min, find the mechanical power rating (P_N) according to the following formula.

$$P_N = P_{750} \times \frac{N}{750}$$

5. Shown in the table are the ratings for the slow speed shaft.

6. Refer to B42-B45 for the allowable radial and axial load on each shaft.

Size of Reducer 9095	9100	9105	9110	9115	9118	9121	9126	9128	9131	9136	Number of Cooling Fans	H.Speed Shaft Speed r/min	Nominal Reduction Ratio
239	273	306	348	385	426						-	**1800**	Triple Reduction Horizontal Type 20 ▼ 25
572	767	860	933	1031	703						1		
246	282	317	366	402	443						-	**1500**	
524	705	792	874	958	730						1		
249	286	321	375	410	450						-	**1200**	
469	634	711	794	869	743						1		
247	284	319	375	410	449						-	**1000**	
413	558	627	703	769	741						1		
244	281	316	373	408	446						-	**900**	
391	530	595	669	732	736						1		
239	275	309	366	400	437						-	**750**	
348	472	530	599	654	722						1		
203	230	258	280	316							-	**1800**	Triple Reduction Vertical Type 20 ▼ 25
485	646	724	750	847							1		
219	249	280	315	350							-	**1500**	
466	624	700	751	834							1		
229	262	294	340	373							-	**1200**	
433	582	653	719	791							1		
232	266	299	349	382							-	**1000**	
388	524	588	655	717							1		
232	266	299	351	384							-	**900**	
371	502	563	630	689							1		
229	264	296	350	382							-	**750**	
334	453	508	571	625							1		
											-	**1800**	Triple Reduction Upright Type 20 ▼ 25
											1		
											-	**1500**	
											1		
											-	**1200**	
											1		
											-	**1000**	
											1		
											-	**900**	
											1		
											-	**750**	
											1		

Ambient Temperature ℃	Temperature Correction Factor Without Fan	With Fan
20	1.00	1.00
30	0.85	0.87
40	0.70	0.73
50	0.55	0.60

Notes

1. Shown in the table are the ratings for models without a fan cooling unit and those with a fan. (-: none fan, 1: with a fan)

2. The values are applicable to continuous operation at ambient temperatures of 20 °C or less. When the temperature is out of the range, refer to the temperature correction factor shown above.

3. When the high speed shaft speed is not shown in the table, find it by interpolation method.

SELECTION Right Angle Shaft Triple Reduction Nominal Reduction Ratio 28 ▶ 35.5

MECHANICAL POWER RATING (kW)

Nominal Reduction Ratio	H.Speed Shaft Speed r/min	L.Speed Shaft Speed r/min	Size of Reducer 9015	9025	9030	9035	9040	9045	9050	9055	9060	9065	9070	9075	9080	9085	9090
28	Exact Reduction Ratio				27.096	27.225	27.893	28.379	29.526	27.706	29.291	27.509	27.941	27.718	27.165	27.041	27.941
	1800	65			44	58	65	81	96	124	152	194	251	295	392	498	559
	1500	54			37	49	55	67	80	103	127	162	210	246	328	417	468
	1200	43			29.9	39	44	54	64	83	102	130	168	198	263	335	376
	1000	36			25.0	33	36	45	54	69	85	108	141	165	220	280	314
	900	32			22.5	29.7	33	40	48	62	77	97	127	149	198	252	283
	750	27			18.8	24.8	28	34	40	52	64	81	106	124	166	211	237
31.5	Exact Reduction Ratio				32.455	31.331	31.694	31.079	31.969	32.319	30.157	31.521	31.129	30.875	32.280	30.017	32.063
	1800	57			32	51	57	81	92	124	140	194	225	295	331	473	508
	1500	48			26.9	43	48	67	79	103	117	162	190	246	280	399	425
	1200	38			21.5	34	38	54	64	83	94	130	152	198	224	321	341
	1000	32			18.0	29.1	32	45	53	69	78	108	127	165	187	268	285
	900	29			16.2	26.2	29	40	48	62	70	97	114	149	169	242	257
	750	24			13.5	21.9	24.1	34	40	52	59	81	95	124	141	202	215
35.5	Exact Reduction Ratio				34.983	34.063	36.165	35.357	36.395	36.309	35.140	36.050	34.879	34.647	35.603	32.960	34.879
	1800	51			32	47	51	69	78	100	127	159	202	266	301	410	450
	1500	42			26.9	39	42	57	65	84	106	133	169	223	251	343	376
	1200	34			21.5	31	34	46	52	67	85	106	135	179	202	276	302
	1000	28			18.0	26.4	29	38	44	56	71	89	113	149	169	230	253
	900	25			16.2	23.8	25.7	34	39	50	64	80	102	134	152	208	228
	750	21			13.5	19.9	21.5	29.2	33	42	53	67	85	112	127	173	190
Dimension Tables		Horizontal			B-52	B-52	B-52	B-52	B-52	B-52	B-54	B-54	B-54	B-54	B-54	B-54	B-56
		Vertical			B-76	B-76	B-76	B-76	B-76	B-76	B-78	B-78	B-78	B-78	B-78	B-78	B-80
		Upright			B-92	B-92	B-92	B-92	B-92	B-92	B-94	B-94	B-94	B-94	B-94	B-94	

THERMAL POWER RATING (kW)

Nominal Reduction Ratio	H.Speed Shaft Speed r/min	Number of Cooling Fans	Size of Reducer 9015	9025	9030	9035	9040	9045	9050	9055	9060	9065	9070	9075	9080	9085	9090
Triple Reduction Horizontal Type 28 ▼ 35.5	1800	-			31	40	49	59	58	74	81	99	109	136	137	168	210
		1			59	79	85	103	135	171	172	209	208	259	364	447	502
	1500	-			30	40	48	58	58	73	81	100	110	138	139	172	212
		1			52	71	75	90	120	152	153	188	186	233	328	408	452
	1200	-			29	39	46	57	57	72	80	98	108	136	138	173	211
		1			44	61	64	79	104	132	133	163	162	205	289	364	398
	1000	-			28	38	44	55	55	70	78	96	106	134	135	172	207
		1			38	53	54	67	89	114	115	142	140	178	251	319	346
	900	-			27	37	43	54	53	69	76	94	104	132	133	170	204
		1			35	50	51	63	83	106	108	133	132	168	236	302	327
	750	-			26	36	41	51	51	66	73	91	100	128	128	165	198
		1			30	43	44	54	72	93	94	117	116	148	208	268	288
Triple Reduction Vertical Type 28 ▼ 35.5	1800	-			30	38	47	56	56	70	77	94	103	128	128	156	180
		1			57	75	82	98	129	163	162	198	196	244	341	415	430
	1500	-			29	38	47	56	56	71	78	96	105	132	132	163	194
		1			50	68	72	87	115	146	147	180	178	222	313	386	412
	1200	-			28	38	45	55	55	70	78	95	105	132	133	167	198
		1			43	60	62	76	101	128	129	158	157	198	279	351	373
	1000	-			27	37	44	54	54	69	76	94	103	131	131	167	197
		1			37	52	54	66	87	111	112	139	137	174	244	310	330
	900	-			27	37	43	53	52	67	75	92	102	129	130	165	196
		1			34	49	50	62	81	105	105	130	129	164	231	295	313
	750	-			25	35	41	51	50	65	72	89	98	126	126	162	191
		1			30	43	43	54	71	92	92	115	114	146	204	263	279
Triple Reduction Upright Type 28 ▼ 35.5	1800	-			31	40	51	59	58	74	81	99	109	136	137	168	
		1			59	79	90	103	135	171	172	209	208	259	364	447	
	1500	-			30	40	50	58	58	73	81	100	110	138	139	172	
		1			52	71	78	90	120	152	153	188	186	233	328	408	
	1200	-			29	39	49	57	57	72	80	98	108	136	138	173	
		1			44	61	67	79	104	132	133	163	162	205	289	364	
	1000	-			28	38	47	55	55	70	78	96	106	134	135	172	
		1			38	53	57	67	89	114	115	142	140	178	251	319	
	900	-			27	37	45	54	53	69	76	94	104	132	133	170	
		1			35	50	53	63	83	106	108	133	132	168	236	302	
	750	-			26	36	43	51	51	66	73	91	100	128	128	165	
		1			30	43	46	54	72	93	94	117	116	148	208	268	

SELECTION Right Angle Shaft Triple Reduction Nominal Reduction Ratio 28 ▶ 35.5

Size of Reducer 9095	9100	9105	9110	9115	9118	9121	9126	9128	9131	9136	L.Speed Shaft Speed r/min	H.Speed Shaft Speed r/min	Nominal Reduction Ratio
28.500	27.119	27.662	27.730	27.389		28.500	28.500		27.737	27.737	Exact Reduction Ratio		
625	812※	970※	1130※	1280※		1930※	2060※		3110※	3260※	**65**	**1800**	
536	679	825	949	1090		1610※	1770※		2600※	2800※	**54**	**1500**	
444	546	663	763	910		1300	1460		2090※	2320※	**43**	**1200**	**28**
379	456	554	638	781		1080	1250		1750	1990	**36**	**1000**	
341	411	500	575	715		982	1140		1580	1820	**32**	**900**	
285	344	418	481	612		821	955		1320	1560	**27**	**750**	
30.922	32.716	30.012	31.413	31.331	31.500	30.922	30.922		31.729	31.729	Exact Reduction Ratio		
589	708※	877※	988※	1140※	1380※	1780※	1920※		2730※	2910※	**57**	**1800**	
498	592	734	823	978	1150	1490※	1640※		2280※	2500※	**48**	**1500**	
400	476	590	658	806	923	1200	1360		1840※	2070※	**38**	**1200**	**31.5**
335	398	493	548	674	769	1000	1160		1530	1770	**32**	**1000**	
302	359	445	494	608	692	906	1050		1380	1620	**29**	**900**	
252	300	372	411	508	576	758	882		1160	1360	**24**	**750**	
35.576	35.108	35.811	36.045	35.601	36.176	36.000	36.000	36.500	35.036	35.036	Exact Reduction Ratio		
522	630※	766※	878※	988※	1330※	1530※	1690※	2110※	2480※	2680※	**51**	**1800**	
448	527	640	734	823	1110	1280※	1450※	1760※	2070※	2300※	**42**	**1500**	
364	424	514	590	658	895	1030	1200	1420※	1670※	1910※	**34**	**1200**	**35.5**
304	354	430	493	548	748	866	1000	1180	1390	1630	**28**	**1000**	
274	319	388	445	494	675	780	908	1070	1260	1480	**25**	**900**	
229	267	324	372	411	564	652	759	895	1050	1240	**21**	**750**	
B-56	B-56	B-56	B-56	B-56	B-58	B-58	B-58	B-60	B-60	B-60	Horizontal	Dimension Tables	
B-80	B-80	B-80	B-80	B-80							Vertical		
											Upright		

Notes

1. For ※ marked values, the forced oil lubrication is required at continuous operation.
2. Consult us when the high speed shaft speed is over 1800r/min.
3. When the high speed shaft speed is not shown in the table, find it by the interpolation method.
4. When the high speed shaft speed (N) is lower than 750r/min, find the mechanical power rating (P_N) according to the following formula.

$$P_N = P_{750} \times \frac{N}{750}$$

5. Shown in the table are the ratings for the slow speed shaft.
6. Refer to B42-B45 for the allowable radial and axial load on each shaft.

Size of Reducer 9095	9100	9105	9110	9115	9118	9121	9126	9128	9131	9136	Number of Cooling Fans	H.Speed Shaft Speed r/min	Nominal Reduction Ratio
229	272	298	340	376	417	500	500	455	537	537	-	**1800**	Triple Reduction Horizontal Type 28 ▼ 35.5
547	764	839	912	1007	688	824	824	751	886	886	1		
230	275	303	348	389	428	529	529	488	586	586	-	**1500**	
490	688	758	830	929	706	872	872	805	966	966	1		
228	274	300	348	390	431	546	546	509	619	619	-	**1200**	
430	607	666	736	825	712	901	901	841	1021	1021	1		
223	269	294	343	383	428	543	543	516	630	630	-	**1000**	
373	529	579	643	719	706	895	895	851	1040	1040	1		
220	265	290	338	378	424	538	538	516	629	629	-	**900**	
352	499	546	607	679	700	888	888	851	1038	1038	1		
213	257	281	329	367	415	526	526	511	622	622	-	**750**	
310	441	481	538	600	684	868	868	843	1026	1026	1		
200	232	255	280	315							-	**1800**	Triple Reduction Vertical Type 28 ▼ 35.5
477	651	717	750	844							1		
212	251	274	310	343							-	**1500**	
450	627	685	738	819							1		
215	256	282	324	363							-	**1200**	
405	569	627	686	768							1		
213	256	281	325	365							-	**1000**	
357	503	552	609	684							1		
211	254	278	323	362							-	**900**	
338	478	524	580	651							1		
206	248	272	317	355							-	**750**	
300	426	466	519	581							1		
											-	**1800**	Triple Reduction Upright Type 28 ▼ 35.5
											1		
											-	**1500**	
											1		
											-	**1200**	
											1		
											-	**1000**	
											1		
											-	**900**	
											1		
											-	**750**	
											1		

Ambient Temperature ℃	Temperature Correction Factor Without Fan	With Fan
20	1.00	1.00
30	0.85	0.87
40	0.70	0.73
50	0.55	0.60

Notes

1. Shown in the table are the ratings for models without a fan cooling unit and those with a fan. (-: none fan, 1: with a fan)
2. The values are applicable to continuous operation at ambient temperatures of 20 °C or less. When the temperature is out of the range, refer to the temperature correction factor shown above.
3. When the high speed shaft speed is not shown in the table, find it by interpolation method.

SELECTION Right Angle Shaft Triple Reduction Nominal Reduction Ratio 40 ▶ 50

MECHANICAL POWER RATING (kW)

Nominal Reduction Ratio	H.Speed Shaft Speed r/min	L.Speed Shaft Speed r/min	Size of Reducer 9015	9025	9030	9035	9040	9045	9050	9055	9060	9065	9070	9075	9080	9085	9090
40	Exact Reduction Ratio				40.607	40.451	39.487	40.296	41.895	39.838	39.520	37.815	38.912	38.541	39.346	39.341	40.078
	1800	45			30	32	50	57	73	92	124	140	194	225	286	331	408
	1500	38			25.8	26.9	41	48	61	79	103	117	162	190	239	280	341
	1200	30			20.7	21.5	33	38	49	65	83	94	130	152	192	224	274
	1000	25			17.3	18.0	28.0	32	40	56	69	78	109	127	160	187	229
	900	23			15.6	16.2	25.3	28.9	36	51	62	70	98	114	144	169	206
	750	19			13.0	13.5	21.1	24.1	30	42	52	59	82	95	121	141	172
45	Exact Reduction Ratio				43.770	43.979	45.058	45.843	47.695	44.756	46.051	43.250	43.599	43.250	43.397	43.198	43.599
	1800	40			27.8	32	41	53	60	82	97	133	162	214	248	315	362
	1500	33			23.2	26.9	34	44	50	68	81	111	135	179	207	263	302
	1200	27			18.6	21.5	28	35	40	55	65	89	108	144	166	211	243
	1000	22			15.6	18.0	23.0	30	33	46	54	74	91	120	139	176	203
	900	20			14.0	16.2	20.7	27.0	30	41	49	67	82	108	125	159	183
	750	17			11.7	13.5	17.3	22.6	25.3	34	41	56	68	90	104	133	152
50	Exact Reduction Ratio				51.141	50.611		50.205	51.869	52.207	50.273	49.557	49.500	48.176	48.889	47.953	50.984
	1800	36			19.3	32		51	59	78	97	130	153	199	231	295	322
	1500	30			16.1	26.9		42	49	65	81	110	128	170	193	252	269
	1200	24			12.9	21.5		34	39	52	65	88	102	137	155	202	216
	1000	20			10.8	18.0		28.6	33	43	54	73	86	115	129	169	180
	900	18			9.7	16.2		25.7	39.9	39	49	66	77	103	116	152	162
	750	15			8.1	13.5		21.4	24.9	32	41	55	64	86	97	127	136
Dimension Tables		Horizontal			B-52	B-52	B-52	B-52	B-52	B-52	B-54	B-54	B-54	B-54	B-54	B-54	B-56
		Vertical			B-76	B-76	B-76	B-76	B-76	B-76	B-78	B-78	B-78	B-78	B-78	B-78	B-80
		Upright			B-92	B-92	B-92	B-92	B-92	B-92	B-92	B-92	B-92	B-92	B-92	B-92	

THERMAL POWER RATING (kW)

Nominal Reduction Ratio	H.Speed Shaft Speed r/min	Number of Cooling Fans	Size of Reducer 9015	9025	9030	9035	9040	9045	9050	9055	9060	9065	9070	9075	9080	9085	9090
Triple Reduction Horizontal Type 40 ▼ 50	1800	-			26	37	44	54	53	67	74	91	102	126	129	159	196
		1			51	73	76	94	123	155	155	192	194	240	342	422	468
	1500	-			26	36	42	53	52	66	73	90	101	125	128	159	195
		1			44	63	66	83	108	136	136	169	171	212	304	376	415
	1200	-			24	34	40	51	50	64	70	87	98	122	126	156	191
		1			37	54	55	70	92	117	117	145	147	184	264	328	360
	1000	-			23	33	38	49	48	61	68	85	95	119	122	152	186
		1			31	46	46	60	78	100	100	126	126	158	227	283	310
	900	-			22	32	37	48	47	60	66	83	93	117	120	149	182
		1			29	42	43	57	73	93	93	117	118	148	213	266	291
	750	-			21	30	34	45	45	57	63	79	89	112	115	144	175
		1			24	36	37	48	63	81	81	102	103	130	186	233	255
Triple Reduction Vertical Type 40 ▼ 50	1800	-			26	36	43	53	51	64	71	87	98	121	123	151	179
		1			49	71	74	93	119	149	149	184	186	229	326	401	427
	1500	-			25	35	41	52	51	64	70	87	98	121	124	153	182
		1			43	62	64	81	105	132	132	163	165	205	293	362	387
	1200	-			24	34	39	50	49	62	69	85	96	119	122	152	182
		1			36	53	54	69	90	114	115	142	144	179	257	319	343
	1000	-			23	32	37	48	48	60	67	83	93	117	120	149	179
		1			30	45	46	59	77	98	98	123	124	155	223	277	299
	900	-			22	31	36	47	46	59	65	81	91	115	117	147	176
		1			28	42	42	55	72	92	92	115	116	146	209	261	282
	750	-			20	30	34	45	44	56	62	78	87	110	113	142	170
		1			24	36	36	48	62	80	80	100	101	128	184	230	248
Triple Reduction Upright Type 40 ▼ 50	1800	-			26	37	47	54	53	67	74	91	102	126	129	159	
		1			51	73	83	95	123	155	155	192	194	240	342	422	
	1500	-			26	36	47	53	52	66	73	90	101	125	128	159	
		1			44	63	72	83	108	136	136	169	171	212	304	376	
	1200	-			24	34	45	51	50	64	70	87	98	122	126	156	
		1			37	54	62	71	92	117	117	145	147	184	264	328	
	1000	-			23	33	43	49	48	61	68	85	95	119	122	152	
		1			31	46	53	60	78	100	100	126	126	158	227	283	
	900	-			22	32	42	48	47	60	66	83	93	117	120	149	
		1			29	42	49	56	73	93	93	117	118	148	213	266	
	750	-			21	30	40	45	45	57	63	79	89	112	115	144	
		1			24	36	42	48	63	81	81	102	103	130	186	233	

SELECTION Right Angle Shaft Triple Reduction Nominal Reduction Ratio 40 ▶ 50

Size of Reducer 9095	9100	9105	9110	9115	9118	9121	9126	9128	9131	9136	L.Speed Shaft Speed r/min	H.Speed Shaft Speed r/min	Nominal Reduction Ratio
38.599	40.322	38.853	38.716	40.726	38.824	39.059	39.059	39.601	40.079	40.079	Exact Reduction Ratio		
479	577※	682※	861※	917※	1240※	1420※	1570※	1940※	2170※	2390※	**45**	**1800**	
401	483	570	723	775	1030	1180※	1350※	1630※	1820※	2050※	**38**	**1500**	
322	388	458	581	623	835	955	1110	1310※	1460※	1700※	**30**	**1200**	**40**
269	324	383	486	521	698	799	930	1090	1220	1440	**25**	**1000**	
242	292	345	438	469	630	720	839	988	1100	1300	**23**	**900**	
202	244	288	366	392	526	602	701	826	923	1080	**19**	**750**	
44.471	43.271	44.136	44.425	43.878	45.882	45.529	45.529	46.162	44.206	44.206	Exact Reduction Ratio		
430	514※	624※	715※	861※	1050※	1220※	1390※	1670※	1970※	2200※	**40**	**1800**	
364	429	522	598	739	882	1020※	1190※	1400※	1650※	1890※	**33**	**1500**	
292	345	419	480	610	709	822	957	1120※	1330※	1560※	**27**	**1200**	**45**
244	288	350	402	508	593	687	800	943	1110	1310	**22**	**1000**	
220	260	315	362	457	534	620	721	850	1000	1180	**20**	**900**	
184	217	264	302	381	446	518	603	710	838	988	**17**	**750**	
48.249	50.875	47.886	48.680	50.194	49.040	49.398	49.398	50.084	50.569	50.569	Exact Reduction Ratio		
385	459※	555※	691※	755※	988※	1120※	1290※	1540※	1730※	1970※	**36**	**1800**	
322	384	464	578	632	827	945※	1090※	1290※	1450※	1690※	**30**	**1500**	
258	308	373	464	507	664	759	883	1040※	1160※	1370※	**24**	**1200**	**50**
216	257	312	388	424	555	634	738	870	974	1140	**20**	**1000**	
194	232	281	349	382	500	572	666	785	878	1030	**18**	**900**	
162	194	234	292	319	416	478	556	656	734	866	**15**	**750**	
B-56	B-56	B-56	B-56	B-56	B-58	B-58	B-58	B-60	B-60	B-60	Horizontal	Dimension Tables	
B-80	B-80	B-80	B-80	B-80							Vertical		
											Upright		

Notes

1. For ※ marked values, the forced oil lubrication is required at continuous operation.

2. Consult us when the high speed shaft speed is over 1800r/min.

3. When the high speed shaft speed is not shown in the table, find it by the interpolation method.

4. When the high speed shaft speed (N) is lower than 750r/min, find the mechanical power rating (P_N) according to the following formula.

$$P_N = P_{750} \times \frac{N}{750}$$

5. Shown in the table are the ratings for the slow speed shaft.

6. Refer to B42-B45 for the allowable radial and axial load on each shaft.

Size of Reducer 9095	9100	9105	9110	9115	9118	9121	9126	9128	9131	9136	Number of Cooling Fans	H.Speed Shaft Speed r/min	Nominal Reduction Ratio
219	258	285	330	362	399	524	524	450	552	552	-	**1800**	Triple Reduction Horizontal Type 40 ▼ 50
524	724	801	885	969	658	864	864	743	911	911	1		
220	257	287	335	365	401	529	529	481	586	586	-	**1500**	
468	642	717	798	870	662	872	872	793	966	966	1		
217	252	283	330	362	397	525	525	490	593	593	-	**1200**	
410	558	629	700	767	655	866	866	809	978	978	1		
213	245	277	323	356	389	516	516	490	590	590	-	**1000**	
356	482	545	606	667	642	852	852	808	973	973	1		
209	240	273	317	351	383	509	509	487	585	585	-	**900**	
335	453	514	570	630	633	840	840	803	965	965	1		
202	232	264	306	340	372	495	495	478	573	573	-	**750**	
295	397	453	501	556	613	817	817	788	945	945	1		
197	233	256	291	322							-	**1800**	Triple Reduction Vertical Type 40 ▼ 50
471	656	720	779	862							1		
203	239	265	305	335							-	**1500**	
432	599	661	727	799							1		
205	239	268	312	341							-	**1200**	
387	531	594	661	721							1		
203	236	265	310	340							-	**1000**	
340	463	522	581	637							1		
201	232	263	306	337							-	**900**	
322	438	495	550	605							1		
196	225	256	298	330							-	**750**	
286	386	439	487	539							1		
											-	**1800**	Triple Reduction Upright Type 40 ▼ 50
											1		
											-	**1500**	
											1		
											-	**1200**	
											1		
											-	**1000**	
											1		
											-	**900**	
											1		
											-	**750**	
											1		

Ambient Temperature ℃	Temperature Correction Factor Without Fan	With Fan
20	1.00	1.00
30	0.85	0.87
40	0.70	0.73
50	0.55	0.60

Notes

1. Shown in the table are the ratings for models without a fan cooling unit and those with a fan. (-: none fan, 1: with a fan)

2. The values are applicable to continuous operation at ambient temperatures of 20 °C or less. When the temperature is out of the range, refer to the temperature correction factor shown above.

3. When the high speed shaft speed is not shown in the table, find it by interpolation method.

SELECTION Right Angle Shaft Triple Reduction Nominal Reduction Ratio 56 ▶ 71

MECHANICAL POWER RATING (kW)

Nominal Reduction Ratio	H.Speed Shaft Speed r/min	L.Speed Shaft Speed r/min	Size of Reducer 9015	9025	9030	9035	9040	9045	9050	9055	9060	9065	9070	9075	9080	9085	9090
56	Exact Reduction Ratio				55.125	55.025	56.987	57.115	59.051	58.652	58.582	56.678	55.462	54.062	53.922	52.655	55.462
	1800	32			19.3	29.4	31	43	48	62	77	102	128	172	200	259	285
	1500	27			16.1	24.6	26.1	36	40	52	64	85	107	144	167	216	238
	1200	21			12.9	19.7	20.9	28.9	32	42	51	68	85	115	134	174	191
	1000	18			10.8	16.5	17.5	24.1	27.3	35	43	57	71	96	112	145	160
	900	16			9.7	14.8	15.7	21.7	24.6	31	38	51	64	87	101	131	144
	750	13			8.1	12.4	13.1	18.1	20.5	26.5	32	43	54	72	84	109	120
63	Exact Reduction Ratio				63.986		62.222		64.640	64.637	63.984	63.041	63.000	61.286	62.222	59.583	64.889
	1800	29			19.3		31		47	63	75	97	111	156	172	238	254
	1500	24			16.1		26.1		39	52	63	81	92	132	143	202	212
	1200	19			12.9		20.9		31	42	50	65	74	106	115	162	170
	1000	16			10.8		17.5		26.6	35	42	54	62	88	96	135	142
	900	14			9.7		15.7		24.0	31	38	49	55	80	86	122	128
	750	12			8.1		13.1		20.0	26.6	31	41	46	66	72	102	107
71	Exact Reduction Ratio				68.971	69.300	71.000	72.237	73.590	72.617	74.559	72.101	70.588	68.773	68.627	65.425	70.588
	1800	25			17.7	19.3	26	31	39	50	60	80	101	135	158	209	225
	1500	21			14.8	16.1	21.9	26.1	32	42	50	67	84	113	132	175	188
	1200	17			11.9	12.9	17.5	20.9	26.3	34	40	53	67	91	105	140	151
	1000	14			9.9	10.8	14.6	17.5	21.9	28.5	34	45	56	76	88	117	126
	900	13			8.9	9.7	13.2	15.7	19.7	25.6	30	40	50	68	79	105	113
	750	11			7.4	8.1	11.0	13.1	16.5	21.4	25.6	33	42	57	66	88	95
Dimension Tables		Horizontal			B-52	B-52	B-52	B-52	B-52	B-52	B-54	B-54	B-54	B-54	B-54	B-54	B-56
		Vertical			B-76	B-76	B-76	B-76	B-76	B-76	B-78	B-78	B-78	B-78	B-78	B-78	B-80
		Upright			B-92	B-92	B-92	B-92	B-92	B-92	B-94	B-94	B-94	B-94	B-94	B-94	

THERMAL POWER RATING (kW)

Nominal Reduction Ratio	H.Speed Shaft Speed r/min	Number of Cooling Fans	Size of Reducer 9015	9025	9030	9035	9040	9045	9050	9055	9060	9065	9070	9075	9080	9085	9090
Triple Reduction Horizontal Type 56 ▼ 71	1800	-			25	31	41	48	49	64	68	86	93	121	118	153	182
		1			48	62	71	84	114	148	143	181	177	230	314	408	436
	1500	-			24	30	39	46	48	62	66	84	91	119	116	152	180
		1			41	53	61	72	98	129	124	158	154	202	276	359	382
	1200	-			23	28	37	44	46	60	63	81	88	115	113	148	174
		1			35	44	51	61	83	109	106	135	132	173	237	310	328
	1000	-			22	27	35	41	43	57	61	78	84	111	109	143	168
		1			29	37	43	50	70	93	89	115	112	148	202	266	281
	900	-			21	26	34	40	42	56	59	76	82	109	106	140	164
		1			27	34	40	47	65	86	83	107	104	138	189	249	262
	750	-			19	24	32	37	40	53	56	72	78	103	101	134	156
		1			23	29	34	39	56	74	72	93	90	120	164	217	228
Triple Reduction Vertical Type 56 ▼ 71	1800	-			24	30	40	47	47	62	65	83	90	117	113	147	169
		1			47	60	69	82	110	143	138	175	171	222	301	391	405
	1500	-			24	29	38	45	46	61	64	82	89	116	113	147	170
		1			40	52	60	70	96	125	121	154	150	196	267	348	361
	1200	-			22	28	37	43	45	59	62	80	86	113	110	144	167
		1			34	43	50	59	82	107	103	133	129	170	232	303	315
	1000	-			21	26	35	41	43	56	60	77	83	109	107	140	162
		1			29	36	43	50	69	91	88	114	110	146	199	261	272
	900	-			21	25	34	39	42	55	58	75	81	107	104	138	159
		1			27	34	39	46	65	85	82	106	103	136	186	245	255
	750	-			19	24	32	37	39	52	55	72	77	102	100	132	153
		1			23	29	34	39	55	74	71	93	89	119	162	215	223
Triple Reduction Upright Type 56 ▼ 71	1800	-			25	31	43	48	49	64	68	86	93	121	118	153	
		1			48	62	74	84	114	148	143	181	177	230	314	408	
	1500	-			24	30	41	46	48	62	66	84	91	119	116	152	
		1			41	53	64	72	98	129	124	158	154	202	276	359	
	1200	-			23	28	39	44	46	60	63	81	88	115	113	148	
		1			35	44	54	61	83	109	106	135	132	173	237	310	
	1000	-			22	27	37	41	43	57	61	78	84	111	109	143	
		1			29	37	45	50	70	93	89	115	112	148	202	266	
	900	-			21	26	36	40	42	56	59	76	82	109	106	140	
		1			27	34	42	47	65	86	83	107	104	138	189	249	
	750	-			19	24	33	37	40	53	56	72	78	103	101	134	
		1			23	29	36	39	56	74	72	93	90	120	164	217	

SELECTION Right Angle Shaft Triple Reduction Nominal Reduction Ratio 56 ▶ 71

Size of Reducer 9095	9100	9105	9110	9115	9118	9121	9126	9128	9131	9136	L.Speed Shaft Speed r/min	H.Speed Shaft Speed r/min	Nominal Reduction Ratio
56.571	54.596	55.688	55.858	55.170	57.957	56.571	56.571	58.172	55.474	55.474	Exact Reduction Ratio		
344	409※	497※	571※	706※	839※	989※	1150※	1330※	1580※	1820※	**32**	**1800**	
287	342	415	478	588	702	827※	962※	1110※	1320※	1560※	**27**	**1500**	
231	274	333	383	470	563	664	773	899※	1060※	1250※	**21**	**1200**	**56**
193	229	278	320	392	471	555	646	751	889	1040	**18**	**1000**	
173	206	251	289	353	424	500	582	677	802	946	**16**	**900**	
145	172	209	241	294	354	418	487	566	670	790	**13**	**750**	
61.378	63.843	60419	61.300	63.112	61.661	61.378	61.378	63.115	63.459	63.459	Exact Reduction Ratio		
304	367※	442※	548※	603※	763※	913※	1060※	1230※	1380※	1620※	**29**	**1800**	
254	307	369	456	504	638	763※	888※	1030※	1160※	1360※	**24**	**1500**	
204	246	296	365	405	512	613	713	829※	932※	1100※	**19**	**1200**	**63**
170	206	248	304	338	427	512	596	693	779	919	**16**	**1000**	
153	185	223	274	305	384	462	537	625	702	828	**14**	**900**	
128	155	186	228	255	320	386	449	522	587	692	**12**	**750**	
72.000	68.512	69.882	70.339	69.474	72.872	70.500	70.500	73.000			Exact Reduction Ratio		
271	327※	397※	456※	548※	660※	797※	927※	1070※	*	*	**25**	**1800**	
226	273	332	381	456	550	666※	775※	895※	*	*	**21**	**1500**	
182	219	266	305	365	440	535	622	719※	*	*	**17**	**1200**	**71**
152	183	222	255	304	367	447	520	601	*	*	**14**	**1000**	
137	165	200	230	274	330	403	469	541	*	*	**13**	**900**	
114	138	167	192	228	275	336	391	452	*	*	**11**	**750**	
B-56	B-56	B-56	B-56	B-56	B-58	B-58	B-58	B-60	B-60	B-60	Horizontal	Dimension Tables	
B-80	B-80	B-80	B-80	B-80							Vertical		
											Upright		

* marked models are quadruple reduction units. Refer to B-30 and B-31.

Notes

1. For ※ marked values, the forced oil lubrication is required at continuous operation.

2. Consult us when the high speed shaft speed is over 1800r/min.

3. When the high speed shaft speed is not shown in the table, find it by the interpolation method.

4. When the high speed shaft speed (N) is lower than 750r/min, find the mechanical power rating (P_N) according to the following formula.

$$P_N = P_{750} \times \frac{N}{750}$$

5. Shown in the table are the ratings for the slow speed shaft.

6. Refer to B42-B45 for the allowable radial and axial load on each shaft.

Size of Reducer 9095	9100	9105	9110	9115	9118	9121	9126	9128	9131	9136	Number of Cooling Fans	H.Speed Shaft Speed r/min	Nominal Reduction Ratio
197	243	267	306	344	387	489	489	454	554	554	-	**1800**	Triple Reduction Horizontal Type 56 ▼ 71
472	683	750	821	921	639	806	806	748	914	914	1		
194	240	263	303	339	385	483	483	457	562	562	-	**1500**	
412	600	657	723	810	634	797	797	754	928	928	1		
187	233	255	296	330	376	470	470	452	561	561	-	**1200**	
353	517	565	626	698	621	776	776	746	925	925	1		
180	225	246	287	319	366	456	456	443	553	553	-	**1000**	
302	443	483	537	599	604	752	752	731	912	912	1		
176	220	240	281	313	359	447	447	437	546	546	-	**900**	
282	415	452	504	561	593	737	737	720	900	900	1		
168	211	230	269	300	346	430	430	423	530	530	-	**750**	
245	361	394	440	490	571	709	709	697	875	875	1		
184	225	249	283	319							-	**1800**	Triple Reduction Vertical Type 56 ▼ 71
441	633	699	757	855							1		
184	226	249	285	321							-	**1500**	
391	566	623	680	765							1		
180	223	245	283	317							-	**1200**	
340	495	543	598	670							1		
175	218	238	277	309							-	**1000**	
293	429	469	519	580							1		
172	214	234	272	304							-	**900**	
275	403	440	489	546							1		
164	206	225	263	293							-	**750**	
240	353	386	430	479							1		
											-	**1800**	Triple Reduction Upright Type 56 ▼ 71
											1		
											-	**1500**	
											1		
											-	**1200**	
											1		
											-	**1000**	
											1		
											-	**900**	
											1		
											-	**750**	
											1		

Ambient Temperature ℃	Temperature Correction Factor Without Fan	With Fan
20	1.00	1.00
30	0.85	0.87
40	0.70	0.73
50	0.55	0.60

Notes

1. Shown in the table are the ratings for models without a fan cooling unit and those with a fan. (-: none fan, 1: with a fan)

2. The values are applicable to continuous operation at ambient temperatures of 20 °C or less. When the temperature is out of the range, refer to the temperature correction factor shown above.

3. When the high speed shaft speed is not shown in the table, find it by interpolation method.

SELECTION Right Angle Shaft Triple Reduction Nominal Reduction Ratio 80 ▶ 90

MECHANICAL POWER RATING (kW)

Nominal Reduction Ratio	H.Speed Shaft Speed r/min	L.Speed Shaft Speed r/min	Size of Reducer 9015	9025	9030	9035	9040	9045	9050	9055	9060	9065	9070	9075	9080	9085	9090
80	Exact Reduction Ratio					79.751		79.111		80.552		80.234		78.000		75.833	77.090
	1800	**23**				19.3	*	31	*	51	*	75	*	111	*	172	206
	1500	**19**				16.1	*	26.1	*	42	*	63	*	92	*	143	172
	1200	**15**				12.9	*	20.9	*	34	*	50	*	74	*	115	138
	1000	**13**				10.8	*	17.5	*	28.5	*	42	*	62	*	96	115
	900	**11**				9.7	*	15.7	*	25.7	*	38	*	55	*	86	104
	750	**9.4**				8.1	*	13.1	*	21.4	*	31	*	46	*	72	87
90	Exact Reduction Ratio					86.706		90.000		90.496		91.765		87.529		83.268	
	1800	**20**				18.8	*	27.5	*	41	*	63	*	107	*	165	*
	1500	**17**				15.7	*	23.0	*	34	*	53	*	89	*	138	*
	1200	**13**				12.6	*	18.4	*	27.4	*	42	*	71	*	110	*
	1000	**11**				10.5	*	15.4	*	22.9	*	35	*	59	*	92	*
	900	**10**				9.4	*	13.8	*	20.6	*	32	*	54	*	83	*
	750	**8.3**				7.9	*	11.6	*	17.2	*	26.7	*	45	*	69	*
Dimension Tables		Horizontal				B-52		B-52		B-52		B-54		B-54		B-54	B-56
		Vertical				B-76		B-76		B-76		B-78		B-78		B-78	B-80
		Upright				B-92		B-92		B-92		B-94		B-94		B-94	

THERMAL POWER RATING (kW)

Nominal Reduction Ratio	H.Speed Shaft Speed r/min	Number of Cooling Fans	Size of Reducer 9015	9025	9030	9035	9040	9045	9050	9055	9060	9065	9070	9075	9080	9085	9090
Triple Reduction Horizontal Type 80 ▼ 90	**1800**	-				30		46		59		79		110		140	185
		1				59		81		136		167		210		372	443
	1500	-				29		44		57		77		108		137	183
		1				51		69		117		145		182		325	388
	1200	-				27		42		54		73		103		132	177
		1				42		58		99		122		155		278	334
	1000	-				25		39		51		70		99		127	171
		1				35		48		83		103		131		237	285
	900	-				24		38		50		68		96		124	167
		1				33		45		77		96		122		221	267
	750	-				23		36		47		64		91		118	159
		1				28		38		66		82		105		191	232
Triple Reduction Vertical Type 80 ▼ 90	**1800**	-				29		45		57		76		107		135	173
		1				58		79		132		160		203		359	412
	1500	-				28		43		56		75		105		134	173
		1				50		67		115		141		178		316	367
	1200	-				27		41		53		72		101		130	170
		1				42		57		97		120		152		272	320
	1000	-				25		39		51		69		97		125	165
		1				35		48		82		102		129		233	276
	900	-				24		38		49		67		95		122	162
		1				32		45		76		95		121		218	259
	750	-				23		35		46		63		90		117	156
		1				27		37		66		81		104		189	227
Triple Reduction Upright Type 80 ▼ 90	**1800**	-				30		46		59		79		110		140	
		1				59		81		136		167		210		372	
	1500	-				29		44		57		77		108		137	
		1				51		69		117		145		182		325	
	1200	-				27		42		54		73		103		132	
		1				42		58		99		122		155		278	
	1000	-				25		39		51		70		99		127	
		1				35		48		83		103		131		237	
	900	-				24		38		50		68		96		124	
		1				33		45		77		96		122		221	
	750	-				23		36		47		64		91		118	
		1				28		38		66		82		105		191	

SELECTION Right Angle Shaft Triple Reduction Nominal Reduction Ratio 80 ▶ 90

Size of Reducer 9095	9100	9105	9110	9115	9118	9121	9126	9128	9131	9136	L.Speed Shaft Speed r/min	H.Speed Shaft Speed r/min	Nominal Reduction Ratio
78.118	77.451	75.820	83.128	79.474	77.647	76.490	76.490	79.203			Exact Reduction Ratio		
240	290※	353※	386※	481※	587※	735※	856※	988※	*	*	**23**	**1800**	
200	242	295	323	402	490	615※	716※	826※	*	*	**19**	**1500**	
160	194	237	259	323	393	493	574	663※	*	*	**15**	**1200**	**80**
134	162	198	216	269	328	412	480	554	*	*	**13**	**1000**	
121	146	178	195	243	296	372	432	499	*	*	**11**	**900**	
101	122	149	163	203	247	310	361	417	*	*	**9.4**	**750**	
85.313		85.712		93.924	91.765						Exact Reduction Ratio		
220	*	313※	*	408※	512※	*	*	*	*	*	**20**	**1800**	
183	*	262	*	341	427	*	*	*	*	*	**17**	**1500**	
147	*	210	*	273	341	*	*	*	*	*	**13**	**1200**	**90**
123	*	175	*	228	284	*	*	*	*	*	**11**	**1000**	
111	*	158	*	206	256	*	*	*	*	*	**10**	**900**	
92	*	132	*	172	213	*	*	*	*	*	**8.3**	**750**	
B-56	B-56	B-56	B-56	B-56	B-58	B-58	B-58	B-60			Horizontal	Dimension Tables	
B-80	B-80	B-80	B-80	B-80							Vertical		
											Upright		

* marked models are quadruple reduction units. Refer to B-30 and B-31.

Notes

1. For ※ marked values, the forced oil lubrication is required at continuous operation.

2. Consult us when the high speed shaft speed is over 1800r/min.

3. When the high speed shaft speed is not shown in the table, find it by the interpolation method.

4. When the high speed shaft speed (N) is lower than 750r/min, find the mechanical power rating (P_N) according to the following formula.

$$P_N = P_{750} \times \frac{N}{750}$$

5. Shown in the table are the ratings for the slow speed shaft.

6. Refer to B42-B45 for the allowable radial and axial load on each shaft.

Size of Reducer 9095	9100	9105	9110	9115	9118	9121	9126	9128	9131	9136	Number of Cooling Fans	H.Speed Shaft Speed r/min	Nominal Reduction Ratio
197	245	263	304	330	363	487	487	447			-	**1800**	Triple Reduction Horizontal Type 80 ▼ 90
471	689	738	814	885	599	803	803	737			1		
194	242	259	300	326	357	481	481	450			-	**1500**	
412	605	647	717	778	590	793	793	742			1		
187	235	251	293	317	346	468	468	445			-	**1200**	
353	521	556	619	671	571	772	772	734			1		
180	227	242	284	307	335	454	454	436			-	**1000**	
301	447	476	532	575	553	749	749	719			1		
176	222	237	278	300	328	445	445	429			-	**900**	
282	418	445	499	539	540	734	734	708			1		
168	213	226	267	288	314	427	427	416			-	**750**	
244	364	388	436	470	517	705	705	686			1		
184	228	245	281	308							-	**1800**	Triple Reduction Vertical Type 80 ▼ 90
440	640	689	753	825							1		
184	229	245	283	309							-	**1500**	
391	572	613	675	737							1		
180	225	241	280	304							-	**1200**	
340	500	535	593	644							1		
175	220	235	274	297							-	**1000**	
292	433	462	515	558							1		
171	216	230	270	292							-	**900**	
274	407	433	484	524							1		
164	208	221	261	282							-	**750**	
239	357	380	426	460							1		
											-	**1800**	Triple Reduction Upright Type 80 ▼ 90
											1		
											-	**1500**	
											1		
											-	**1200**	
											1		
											-	**1000**	
											1		
											-	**900**	
											1		
											-	**750**	
											1		

Ambient Temperature °C	Temperature Correction Factor Without Fan	With Fan
20	1.00	1.00
30	0.85	0.87
40	0.70	0.73
50	0.55	0.60

Notes

1. Shown in the table are the ratings for models without a fan cooling unit and those with a fan. (-: none fan, 1: with a fan)

2. The values are applicable to continuous operation at ambient temperatures of 20 °C or less. When the temperature is out of the range, refer to the temperature correction factor shown above.

3. When the high speed shaft speed is not shown in the table, find it by interpolation method.

SELECTION Right Angle Shaft Quadruple Reduction Nominal Reduction Ratio 71 ▶ 90

MECHANICAL POWER RATING (kW)

Nominal Reduction Ratio	H.Speed Shaft Speed r/min	L.Speed Shaft Speed r/min	Size of Reducer 9015	9025	9030	9035	9040	9045	9050	9055	9060	9065	9070	9075	9080	9085	9090
71	Exact Reduction Ratio																
	1800	25			*	*	*	*	*	*	*	*	*	*	*	*	*
	1500	21			*	*	*	*	*	*	*	*	*	*	*	*	*
	1200	17			*	*	*	*	*	*	*	*	*	*	*	*	*
	1000	14			*	*	*	*	*	*	*	*	*	*	*	*	*
	900	13			*	*	*	*	*	*	*	*	*	*	*	*	*
	750	11			*	*	*	*	*	*	*	*	*	*	*	*	*
80	Exact Reduction Ratio						77.989		79.341				78.120		79.124		
	1800	23				*	26	*	30	*		*	80	*	127	*	*
	1500	19				*	21	*	25.3	*		*	66	*	106	*	*
	1200	15				*	17	*	20.3	*		*	53	*	84	*	*
	1000	13				*	14	*	16.9	*		*	44	*	70	*	*
	900	11				*	13	*	15.2	*		*	40	*	63	*	*
	750	9.4				*	11	*	12.7	*		*	33	*	53	*	*
90	Exact Reduction Ratio						88.991		90.326		91.330		87.529		87.269		90.353
	1800	20				*	21.0	*	30	*	45	*	80	*	124	*	176
	1500	17				*	17.5	*	25.3	*	37	*	66	*	104	*	147
	1200	13				*	14.0	*	20.3	*	30	*	53	*	83	*	118
	1000	11				*	11.7	*	16.9	*	25.0	*	44	*	69	*	98
	900	10				*	10.5	*	15.2	*	22.5	*	40	*	62	*	89
	750	8.3				*	8.8	*	12.7	*	18.8	*	33	*	52	*	74
Dimension Tables		Horizontal					B-62		B-62		B-64		B-64		B-64		B-66
		Vertical					B-82		B-82		B-84		B-84		B-84		B-86
		Upright					B-96		B-96		B-98		B-98		B-98		

THERMAL POWER RATING (kW)

Nominal Reduction Ratio	H.Speed Shaft Speed r/min	Number of Cooling Fans	Size of Reducer 9015	9025	9030	9035	9040	9045	9050	9055	9060	9065	9070	9075	9080	9085	9090
Quadruple Reduction Horizontal Type 71 ▼ 90	1800	-					40		50		70		94		119		157
	1500	-					40		49		69		93		118		157
	1200	-					39		47		66		90		115		155
	1000	-					38		45		63		87		112		151
	900	-					37		44		62		85		109		149
	750	-					36		42		59		82		105		143
Quadruple Reduction Vertical Type 71 ▼ 90	1800	-					44		54		75		103		130		175
	1500	-					43		52		73		99		127		171
	1200	-					41		49		69		95		121		165
	1000	-					40		47		66		91		116		159
	900	-					39		45		64		88		113		155
	750	-					37		43		60		84		108		148
Quadruple Reduction Upright Type 71 ▼ 90	1800	-					43		50		70		94		118		
	1500	-					43		49		68		93		117		
	1200	-					42		47		66		90		115		
	1000	-					41		45		63		87		111		
	900	-					40		44		62		85		109		
	750	-					38		41		59		81		105		

SELECTION Right Angle Shaft Quadruple Reduction Nominal Reduction Ratio 71 ▶ 90

Size of Reducer 9095	9100	9105	9110	9115	9118	9121	9126	9128	9131	9136	L.Speed Shaft Speed r/min	H.Speed Shaft Speed r/min	Nominal Reduction Ratio
									68.889	68.889	Exact Reduction Ratio		
*	*	*	*	*	*	*	*	*	1280※	1510※	**25**	**1800**	
*	*	*	*	*	*	*	*	*	1070	1260	**21**	**1500**	
*	*	*	*	*	*	*	*	*	860	1010	**17**	**1200**	**71**
*	*	*	*	*	*	*	*	*	718	848	**14**	**1000**	
*	*	*	*	*	*	*	*	*	648	764	**13**	**900**	
*	*	*	*	*	*	*	*	*	541	638	**11**	**750**	
									78.568	78.568	Exact Reduction Ratio		
*	*	*	*	*	*	*	*	*	1120※	1320※	**23**	**1800**	
*	*	*	*	*	*	*	*	*	941	1110	**19**	**1500**	
*	*	*	*	*	*	*	*	*	755	891	**15**	**1200**	**80**
*	*	*	*	*	*	*	*	*	631	745	**13**	**1000**	
*	*	*	*	*	*	*	*	*	569	671	**11**	**900**	
*	*	*	*	*	*	*	*	*	475	560	**9.4**	**750**	
	88.676		89.695			91.800	91.800	91.022	87.371	87371	Exact Reduction Ratio		
*	254	*	379	*	*	615	715	862※	1010※	1190※	**20**	**1800**	
*	212	*	316	*	*	514	598	720	848	1000	**17**	**1500**	
*	170	*	254	*	*	412	480	578	680	803	**13**	**1200**	**90**
*	142	*	212	*	*	344	401	483	568	670	**11**	**1000**	
*	128	*	191	*	*	310	361	435	512	604	**10**	**900**	
*	106	*	159	*	*	259	301	363	428	505	**8.3**	**750**	
	B-66 B-86		B-66 B-86			B-68	B-68	B-70	B-70	B-70	Horizontal Vertical Upright	Dimension Tables	

* marked models are triple reduction units. Refer to B-28 ～ B-29.

Notes

1. For ※ marked values, the forced oil lubrication is required at continuous operation.

2. Consult us when the high speed shaft speed is over 1800r/min.

3. When the high speed shaft speed is not shown in the table, find it by the interpolation method.

4. When the high speed shaft speed (N) is lower than 750r/min, find the mechanical power rating (P_N) according to the following formula.

$$P_N = P_{750} \times \frac{N}{750}$$

5. Shown in the table are the ratings for the slow speed shaft.

6. Refer to B42-B45 for the allowable radial and axial load on each shaft.

Size of Reducer 9095	9100	9105	9110	9115	9118	9121	9126	9128	9131	9136	Number of Cooling Fans	H.Speed Shaft Speed r/min	Nominal Reduction Ratio
	202		259			359	359	386	472	472	-	**1800**	Quadruple Reduction Horizontal Type
	204		259			361	361	395	484	484	-	**1500**	
	202		255			356	356	397	488	488	-	**1200**	
	199		250			349	349	394	484	484	-	**1000**	71
	196		246			344	344	390	480	480	-	**900**	▼
	190		237			334	334	381	469	469	-	**750**	90
	228		288								-	**1800**	Quadruple Reduction Vertical Type
	224		281								-	**1500**	
	216		271								-	**1200**	
	209		262								-	**1000**	71
	205		256								-	**900**	▼
	197		245								-	**750**	90
											-	**1800**	Quadruple Reduction Upright Type
											-	**1500**	
											-	**1200**	
											-	**1000**	71
											-	**900**	▼
											-	**750**	90

Ambient Temperature ℃	Temperature Correction Factor Without Fan	With Fan
20	1.00	1.00
30	0.85	0.87
40	0.70	0.73
50	0.55	0.60

Notes

1. Shown in the table are the ratings for models without a fan cooling unit and those with a fan. (-: none fan, 1: with a fan)

2. The values are applicable to continuous operation at ambient temperatures of 20 °C or less. When the temperature is out of the range, refer to the temperature correction factor shown above.

3. When the high speed shaft speed is not shown in the table, find it by interpolation method.

SELECTION Right Angle Shaft Quadruple Reduction Nominal Reduction Ratio 100 ▶ 125

MECHANICAL POWER RATING (kW)

Nominal Reduction Ratio	H.Speed Shaft Speed r/min	L.Speed Shaft Speed r/min	Size of Reducer 9015	9025	9030	9035	9040	9045	9050	9055	9060	9065	9070	9075	9080	9085	9090
100	Exact Reduction Ratio						99.259	99.158	103.97	98.871	102.71		97.650	96.720	96.444	96.432	103.82
	1800	18					20.1	26.0	29.8	30	45		78	80	118	127	160
	1500	15					16.8	21.7	24.9	25.3	37		65	66	99	106	133
	1200	12					13.5	17.4	19.9	20.3	30		52	53	79	84	107
	1000	10					11.2	14.5	16.6	16.9	25.0		43	44	66	70	89
	900	9.0					10.1	13.0	15.0	15.2	22.5		39	40	59	63	80
	750	7.5					8.4	10.8	12.5	12.7	18.8		33	33	49	53	67
112	Exact Reduction Ratio						113.26	112.81	118.37	111.08	119.69	112.41	109.41	108.54	106.37	105.89	112.94
	1800	16					16.5	22.0	24.5	30	38	45	65	80	102	127	141
	1500	13					13.8	18.4	20.4	25.3	31	37	54	66	85	106	118
	1200	11					11.0	14.7	16.4	20.3	25.5	30	43	53	68	84	95
	1000	8.9					9.2	12.3	13.7	16.9	21.3	25.0	36	44	57	70	79
	900	8.0					8.3	11.1	12.3	15.2	19.2	22.5	33	40	51	63	71
	750	6.7					6.9	9.2	10.3	12.7	16.0	18.8	27.5	33	43	53	59
125	Exact Reduction Ratio						122.72	126.20	130.09	129.57	127.97	128.80	127.97	120.90	126.39	117.54	129.78
	1800	14					16.3	20.4	23.9	30	38	45	60	80	90	124	128
	1500	12					13.6	17.0	19.9	25.3	32	37	50	66	75	104	107
	1200	9.6					10.6	13.6	16.0	20.3	26.0	30	40	53	60	83	86
	1000	8.0					9.1	11.4	13.3	16.9	21.7	25.0	33	44	50	69	71
	900	7.2					8.2	10.2	12.0	15.2	19.6	22.5	30	40	45	62	64
	750	6.0					6.8	8.5	10.0	12.7	16.3	18.8	25.2	33	38	52	53
Dimension Tables		Horizontal					B-62	B-62	B-62	B-62	B-64	B-64	B-64	B-64	B-64	B-64	B-66
		Vertical					B-82	B-82	B-82	B-82	B-84	B-84	B-84	B-84	B-84	B-84	B-86
		Upright					B-96	B-96	B-96	B-96	B-98	B-98	B-98	B-98	B-98	B-98	

THERMAL POWER RATING (kW)

Nominal Reduction Ratio	H.Speed Shaft Speed r/min	Number of Cooling Fans	Size of Reducer 9015	9025	9030	9035	9040	9045	9050	9055	9060	9065	9070	9075	9080	9085	9090
Quadruple Reduction Horizontal Type 100 ▼ 125	1800	-					39	45	46	57	64	78	87	107	110	135	147
	1500	-					38	44	45	55	63	76	86	105	109	133	147
	1200	-					36	42	43	53	60	72	83	102	106	129	144
	1000	-					35	40	41	50	58	69	80	98	103	125	140
	900	-					34	39	40	49	56	68	78	96	100	122	138
	750	-					32	37	38	46	54	64	74	91	96	117	133
Quadruple Reduction Vertical Type 100 ▼ 125	1800	-					41	48	49	60	69	82	94	115	120	146	162
	1500	-					40	46	47	58	66	79	91	111	116	142	158
	1200	-					38	44	45	55	63	75	86	106	111	135	152
	1000	-					36	42	43	52	60	71	83	101	107	130	147
	900	-					35	40	41	50	58	69	80	98	104	126	143
	750	-					33	38	39	47	55	65	76	93	99	120	137
Quadruple Reduction Upright Type 100 ▼ 125	1800	-					41	45	46	56	64	78	87	107	110	135	
	1500	-					40	44	45	55	63	76	85	105	109	133	
	1200	-					38	42	43	53	60	72	83	101	106	129	
	1000	-					37	40	41	50	58	69	80	98	103	125	
	900	-					36	39	40	49	56	68	78	95	100	122	
	750	-					34	37	38	46	54	64	74	91	96	117	

SELECTION Right Angle Shaft Quadruple Reduction Nominal Reduction Ratio 100 ▶ 125

Size of Reducer 9095	9100	9105	9110	9115	9118	9121	9126	9128	9131	9136	L.Speed Shaft Speed r/min	H.Speed Shaft Speed r/min	Nominal Reduction Ratio
99.991	101.85	98.135	97.789	101.65	98.060	99.600	99.600	98.756	99.948	99.948	Exact Reduction Ratio		
188	232	274	348	401	500	567	660	796※	889※	1040※	**18**	**1800**	
157	194	229	290	335	418	474	552	665	742	876	**15**	**1500**	
126	155	184	233	269	335	380	443	534	596	703	**12**	**1200**	**100**
105	129	153	194	224	280	318	370	446	498	587	**10**	**1000**	
94	117	138	175	202	252	286	333	402	448	529	**9.0**	**900**	
79	97	115	146	169	210	239	278	335	374	442	**7.5**	**750**	
115.20	109.29	111.48	112.21	110.83	113.61	115.20	115.20	112.18	110.36	110.36	Exact Reduction Ratio		
170	206	251	287	368	433	492	572	702※	806※	951※	**16**	**1800**	
142	172	209	240	308	362	411	478	586	673	794	**13**	**1500**	
114	138	168	192	247	290	329	383	470	540	637	**11**	**1200**	**112**
95	115	140	161	206	242	275	320	393	451※	532※	**8.9**	**1000**	
86	104	126	145	186	218	248	288	354	406	480	**8.0**	**900**	
71	86	105	121	155	181	207	241	295	339	400	**6.7**	**750**	
124.99	124.14	120.95	119.20	126.78	123.87	124.99	124.99	121.72	126.25	126.25	Exact Reduction Ratio		
151	191	223	286	304	397	454	528	648※	706※	833※	**14**	**1800**	
126	159	186	239	253	332	349	441	541	590	696	**12**	**1500**	
101	127	149	191	203	266	304	354	434	473	558	**9.6**	**1200**	**125**
84	106	124	160	170	222	254	295	362	395	466	**8.0**	**1000**	
76	96	112	144	153	200	229	266	327	356	420	**7.0**	**900**	
63	80	94	120	127	167	191	222	273	297	350	**6.0**	**750**	
B-66	B-66	B-66	B-66	B-66	B-68	B-68	B-68	B-70	B-70	B-70	Horizontal	Dimension Tables	
B-86	B-86	B-86	B-86	B-86							Vertical		
											Upright		

Notes

1. For ※ marked values, the forced oil lubrication is required at continuous operation.

2. Consult us when the high speed shaft speed is over 1800r/min.

3. When the high speed shaft speed is not shown in the table, find it by the interpolation method.

4. When the high speed shaft speed (N) is lower than 750r/min, find the mechanical power rating (P_N) according to the following formula.

$$P_N = P_{750} \times \frac{N}{750}$$

5. Shown in the table are the ratings for the slow speed shaft.

6. Refer to B42-B45 for the allowable radial and axial load on each shaft.

Size of Reducer 9095	9100	9105	9110	9115	9118	9121	9126	9128	9131	9136	Number of Cooling Fans	H.Speed Shaft Speed r/min	Nominal Reduction Ratio
164	189	211	252	275	302	355	355	374	470	470	-	**1800**	Quadruple Reduction Horizontal Type
163	190	212	250	273	300	355	355	380	470	470	-	**1500**	
160	188	209	245	268	293	350	350	380	464	464	-	**1200**	
156	184	205	239	261	285	342	342	375	454	454	-	**1000**	100
153	181	202	235	256	280	337	337	371	447	447	-	**900**	▼
148	176	195	227	247	270	326	326	362	433	433	-	**750**	125
180	211	236	275	300							-	**1800**	Quadruple Reduction Vertical Type
176	207	230	268	293							-	**1500**	
169	200	223	258	282							-	**1200**	
163	193	215	249	272							-	**1000**	100
159	189	210	243	265							-	**900**	▼
152	181	202	233	254							-	**750**	125
											-	**1800**	Quadruple Reduction Upright Type
											-	**1500**	
											-	**1200**	
											-	**1000**	100
											-	**900**	▼
											-	**750**	125

Ambient Temperature ℃	Temperature Correction Factor Without Fan	With Fan
20	1.00	1.00
30	0.85	0.87
40	0.70	0.73
50	0.55	0.60

Notes

1. Shown in the table are the ratings for models without a fan cooling unit and those with a fan. (-: none fan, 1: with a fan)

2. The values are applicable to continuous operation at ambient temperatures of 20 °C or less. When the temperature is out of the range, refer to the temperature correction factor shown above.

3. When the high speed shaft speed is not shown in the table, find it by interpolation method.

SELECTION Right Angle Shaft Quadruple Reduction Nominal Reduction Ratio 140 ▶ 180

MECHANICAL POWER RATING (kW)

Nominal Reduction Ratio	H.Speed Shaft Speed r/min	L.Speed Shaft Speed r/min	Size of Reducer 9015	9025	9030	9035	9040	9045	9050	9055	9060	9065	9070	9075	9080	9085	9090
140	Exact Reduction Ratio						140.03	143.57	148.10	145.56	149.12	147.31	143.38	135.67	139.40	129.07	141.18
	1800	13					13.4	17.3	19.6	25.6	30	39	50	69	78	107	113
	1500	11					11.2	14.5	16.4	21.4	25.6	33	41	58	65	89	95
	1200	8.6					8.9	11.6	13.1	17.1	20.5	26.6	33	46	52	71	76
	1000	7.1					7.5	9.7	10.9	14.3	17.1	22.2	28.0	38	43	59	63
	900	6.4					6.7	8.7	9.9	12.9	15.4	20.0	25.2	35	39	54	57
	750	5.4					5.6	7.3	8.2	10.7	12.9	16.7	21.0	29.2	32	45	47
160	Exact Reduction Ratio							156.02	158.68	162.11	156.75	160.47		158.44	158.25	154.04	163.15
	1800	11						16.5	17.1	25.5	25.7	40		63	68	95	102
	1500	9.4						13.8	14.3	21.3	21.4	34		53	57	79	85
	1200	7.5						11.0	11.4	17.1	17.1	27.2		42	46	64	68
	1000	6.3						9.2	9.5	14.2	14.3	22.7		35	38	53	57
	900	5.6						8.3	8.6	12.8	12.8	20.4		31	34	48	51
	750	4.7						6.9	7.1	10.7	10.7	17.0		26.6	28.7	40	43
180	Exact Reduction Ratio							177.50	180.65	182.13	182.66	183.53	171.41	177.79	174.54	169.14	177.48
	1800	10						14.0	16.1	20.5	25.1	32	39	53	62	82	90
	1500	8.3						11.7	13.4	17.1	20.9	26.7	33	44	52	68	75
	1200	6.7						9.4	10.8	13.7	16.8	21.4	26.6	35	42	54	60
	1000	5.6						7.8	9.0	11.4	14.0	17.8	22.1	29.7	35	45	50
	900	5.0						7.1	8.1	10.3	12.6	16.1	19.9	26.7	31	41	45
	750	4.2						5.9	6.7	8.6	10.5	13.4	16.6	22.3	26.4	34	38
Dimension Tables		Horizontal					B-62	B-62	B-62	B-62	B-64	B-64	B-64	B-64	B-64	B-64	B-66
		Vertical					B-82	B-82	B-82	B-82	B-84	B-84	B-84	B-84	B-84	B-84	B-86
		Upright					B-96	B-96	B-96	B-96	B-98	B-98	B-98	B-98	B-98	B-98	

THERMAL POWER RATING (kW)

Nominal Reduction Ratio	H.Speed Shaft Speed r/min	Number of Cooling Fans	Size of Reducer 9015	9025	9030	9035	9040	9045	9050	9055	9060	9065	9070	9075	9080	9085	9090
Quadruple Reduction Horizontal Type 140 ▼ 180	1800	-					38	42	40	55	59	75	81	102	101	130	144
	1500	-					37	41	38	53	56	73	78	100	98	127	140
	1200	-					35	39	36	51	53	70	73	97	93	123	135
	1000	-					34	38	34	48	50	67	70	93	89	119	129
	900	-					33	37	32	47	48	65	67	91	86	117	126
	750	-					31	35	30	45	45	62	63	86	81	111	120
Quadruple Reduction Vertical Type 140 ▼ 180	1800	-					40	45	42	58	61	79	84	109	107	139	152
	1500	-					39	43	39	55	58	76	81	105	102	135	147
	1200	-					37	41	37	52	54	72	75	100	96	129	139
	1000	-					35	39	34	50	51	68	71	96	91	123	133
	900	-					34	38	33	48	49	66	69	93	88	120	129
	750	-					32	36	30	45	46	63	64	88	82	114	122
Quadruple Reduction Upright Type 140 ▼ 180	1800	-					39	42	40	54	59	75	81	102	101	129	
	1500	-					38	41	38	53	56	73	78	100	98	127	
	1200	-					37	39	36	51	53	70	73	96	93	123	
	1000	-					35	38	33	48	50	67	70	93	89	119	
	900	-					34	37	32	47	48	65	67	91	86	116	
	750	-					33	35	30	44	45	62	63	86	81	111	

SELECTION Right Angle Shaft Quadruple Reduction Nominal Reduction Ratio 140 ▶ 180

Size of Reducer 9095	9100	9105	9110	9115	9118	9121	9126	9128	9131	9136	L.Speed Shaft Speed r/min	H.Speed Shaft Speed r/min	Nominal Reduction Ratio
144.00	133.22	135.88	136.77	135.09	146.39	142.31	142.31	145.23	136.02	136.02	Exact Reduction Ratio		
137	170	206	236	303	337	399	464	544※	656※	774※	**13**	**1800**	
114	141	172	197	253	281	333	388	454	548	646	**11**	**1500**	
91	113	138	158	203	226	267	311	364	439	518	**8.6**	**1200**	**140**
76	95	115	132	169	188	223	260	304	367	433	**7.1**	**1000**	
69	85	104	119	152	170	201	234	274	330	390	**6.4**	**900**	
57	71	86	99	127	142	168	195	229	276	325	**5.4**	**750**	
156.24	158.28	147.43	153.67	154.53	150.98	154.40	154.40	157.57	155.60	155.60	Exact Reduction Ratio		
121	150	183	222	250	327	368	429	502※	574※	678※	**11**	**1800**	
101	125	153	186	208	273	307	358	419	480	566	**9.4**	**1500**	
81	100	123	149	167	219	246	287	336	385	454	**7.5**	**1200**	**160**
67	84	102	124	139	183	206	240	281	321	379	**6.3**	**1000**	
61	75	92	112	126	165	185	216	253	289	341	**5.6**	**900**	
50	63	77	93	105	137	155	180	211	241	285	**4.7**	**750**	
181.03	169.85	173.25	181.61	174.16	178.43	177.88	177.88	179.00	171.03	171.03	Exact Reduction Ratio		
109	133	162	189	236	277	320	373	443※	523※	617※	**10**	**1800**	
91	111	135	157	197	231	267	311	370	437	515	**8.3**	**1500**	
73	89	108	126	158	185	214	249	296	350	413	**6.7**	**1200**	**180**
61	74	90	105	131	155	179	208	247	292	345	**5.6**	**1000**	
55	67	81	95	118	139	161	187	223	263	311	**5.0**	**900**	
45	56	68	79	99	116	134	156	186	220	259	**4.2**	**750**	
B-66	B-66	B-66	B-66	B-66	B-68	B-68	B-68	B-70	B-70	B-70	Horizontal	Dimension Tables	
B-86	B-86	B-86	B-86	B-86							Vertical		
											Upright		

Notes

1. For ※ marked values, the forced oil lubrication is required at continuous operation.

2. Consult us when the high speed shaft speed is over 1800r/min.

3. When the high speed shaft speed is not shown in the table, find it by the interpolation method.

4. When the high speed shaft speed (N) is lower than 750r/min, find the mechanical power rating (P_N) according to the following formula.

$$P_N = P_{750} \times \frac{N}{750}$$

5. Shown in the table are the ratings for the slow speed shaft.

6. Refer to B42-B45 for the allowable radial and axial load on each shaft.

Size of Reducer 9095	9100	9105	9110	9115	9118	9121	9126	9128	9131	9136	Number of Cooling Fans	H.Speed Shaft Speed r/min	Nominal Reduction Ratio
155	188	205	242	265	291	339	339	372	457	457	-	**1800**	Quadruple Reduction Horizontal Type
151	184	201	237	258	288	334	334	369	456	456	-	**1500**	
145	178	194	228	248	281	325	325	361	444	444	-	**1200**	
139	171	186	219	238	273	316	316	352	431	431	-	**1000**	140
135	167	182	213	232	268	309	309	346	422	422	-	**900**	▼
129	160	174	204	221	258	298	298	334	406	406	-	**750**	180
164	200	218	256	279							-	**1800**	Quadruple Reduction Vertical Type
158	194	211	247	269							-	**1500**	
150	184	200	235	255							-	**1200**	
143	176	192	224	244							-	**1000**	140
138	172	186	218	237							-	**900**	▼
131	163	177	207	225							-	**750**	180
											-	**1800**	Quadruple Reduction Upright Type
											-	**1500**	
											-	**1200**	
											-	**1000**	140
											-	**900**	▼
											-	**750**	180

Ambient Temperature ℃	Temperature Correction Factor Without Fan	With Fan
20	1.00	1.00
30	0.85	0.87
40	0.70	0.73
50	0.55	0.60

Notes

1. Shown in the table are the ratings for models without a fan cooling unit and those with a fan. (-: none fan, 1: with a fan)

2. The values are applicable to continuous operation at ambient temperatures of 20 °C or less. When the temperature is out of the range, refer to the temperature correction factor shown above.

3. When the high speed shaft speed is not shown in the table, find it by interpolation method.

SELECTION Right Angle Shaft Quadruple Reduction Nominal Reduction Ratio 200 ▶ 250

MECHANICAL POWER RATING (kW)

Nominal Reduction Ratio	H.Speed Shaft Speed r/min	L.Speed Shaft Speed r/min	Size of Reducer 9015	9025	9030	9035	9040	9045	9050	9055	9060	9065	9070	9075	9080	9085	9090
200	Exact Reduction Ratio								207.95	197.74	205.42	196.56	191.23		192.89	192.86	207.64
	1800	9.0							15.0	17.1	24.3	25.7	39		59	68	80
	1500	7.5							12.5	14.3	20.3	21.4	33		49	57	67
	1200	6.0							10.0	11.4	16.3	17.1	26.6		39	46	53
	1000	5.0							8.4	9.5	13.6	14.3	22.1		33	38	45
	900	4.5							7.5	8.6	12.2	12.8	19.9		30	34	40
	750	3.8							6.3	7.1	10.2	10.7	16.6		25.0	28.7	33
224	Exact Reduction Ratio								236.74	222.15	239.37	224.81	214.26	212.55	212.75	211.77	225.88
	1800	8.0							12.3	16.8	19.2	25.7	33	39	51	65	71
	1500	6.7							10.3	14.0	16.0	21.4	28.1	33	43	54	59
	1200	5.4							8.2	11.3	12.8	17.1	22.5	26.6	34	44	47
	1000	4.5							6.9	9.4	10.7	14.3	18.8	22.1	28.8	36	39
	900	4.0							6.2	8.5	9.6	12.9	16.9	19.9	25.9	33	35
	750	3.3							5.2	7.1	8.0	10.7	14.1	16.6	21.6	27.6	30
250	Exact Reduction Ratio								260.18	259.14	255.94	257.59	250.61	236.76	252.78	235.08	259.56
	1800	7.2							12.0	16.0	19.6	25.5	30	39	45	62	64
	1500	6.0							10.0	13.4	16.3	21.2	25.8	33	38	52	53
	1200	4.8							8.0	10.7	13.1	17.0	20.6	26.6	30	42	43
	1000	4.0							6.7	8.9	10.9	14.1	17.2	22.2	25.5	35	36
	900	3.6							6.0	8.0	9.8	12.7	15.5	19.9	22.9	31	32
	750	3.0							5.0	6.7	8.2	10.6	12.9	16.6	19.1	26.4	27.1
Dimension Tables		Horizontal							B-62	B-62	B-64	B-64	B-64	B-64	B-64	B-64	B-66
		Vertical							B-82	B-82	B-84	B-84	B-84	B-84	B-84	B-84	B-86
		Upright							B-96	B-96	B-98	B-98	B-98	B-98	B-98	B-98	

THERMAL POWER RATING (kW)

Nominal Reduction Ratio	H.Speed Shaft Speed r/min	Number of Cooling Fans	Size of Reducer 9015	9025	9030	9035	9040	9045	9050	9055	9060	9065	9070	9075	9080	9085	9090
Quadruple Reduction Horizontal Type 200 ▼ 250	1800	-							37	45	54	65	74	91	94	114	128
	1500	-							35	43	52	62	71	87	91	110	124
	1200	-							33	40	48	58	67	82	86	104	118
	1000	-							31	38	46	55	64	78	82	99	112
	900	-							30	36	44	53	62	75	79	96	109
	750	-							28	34	41	49	58	71	75	90	103
Quadruple Reduction Vertical Type 200 ▼ 250	1800	-							38	47	56	67	77	94	98	119	134
	1500	-							36	44	53	63	74	90	94	114	129
	1200	-							34	41	50	59	69	84	88	107	121
	1000	-							31	38	47	55	65	79	84	101	115
	900	-							30	37	45	53	63	76	81	98	111
	750	-							28	34	42	50	59	72	76	92	105
Quadruple Reduction Upright Type 200 ▼ 250	1800	-							37	45	54	65	74	91	94	114	
	1500	-							35	43	52	62	71	87	91	110	
	1200	-							33	40	48	58	67	82	86	104	
	1000	-							31	38	46	55	64	78	82	99	
	900	-							30	36	44	53	62	75	79	96	
	750	-							28	34	41	49	58	71	75	90	

SELECTION Right Angle Shaft Quadruple Reduction Nominal Reduction Ratio 200 ▶ 250

Size of Reducer 9095	9100	9105	9110	9115	9118	9121	9126	9128	9131	9136	L.Speed Shaft Speed r/min	H.Speed Shaft Speed r/min	Nominal Reduction Ratio
196.41	203.69	187.97	195.58	205.82	190.95	193.00	193.00	194.21	195.65	195.65	Exact Reduction Ratio		
96	117	144	172	200	259	295	344	408※	458※	540※	**9.0**	**1800**	
80	97	120	143	167	216	246	287	341	382	451	**7.5**	**1500**	
64	78	96	115	133	173	198	230	273	307	362	**6.0**	**1200**	**200**
53	65	80	96	111	145	165	192	228	256	302	**5.0**	**1000**	
48	58	72	86	100	130	148	173	205	230	272	**4.5**	**900**	
40	49	60	72	84	109	124	144	171	192	227	**3.8**	**750**	
230.40	218.59	222.96	224.42	221.65	230.04	226.29	226.29	229.95	215.37	215.37	Exact Reduction Ratio		
86	104	126	145	172	215	252	294	345※	417※	491※	**8.0**	**1800**	
71	86	105	121	143	180	211	245	288	348	410	**6.7**	**1500**	
57	69	84	97	115	144	169	196	231	279	329	**5.4**	**1200**	**224**
48	58	70	81	96	120	141	164	193	233	274	**4.5**	**1000**	
43	52	63	73	86	108	127	148	174	209	247	**4.0**	**900**	
36	43	53	60	72	90	106	123	145	175	206	**3.3**	**750**	
249.98	248.28	241.90	238.39	253.56	237.26	245.51	245.51	249.49	246.37	246.37	Exact Reduction Ratio		
76	96	112	144	153	209	233	271	319※	365※	430※	**7.2**	**1800**	
63	80	94	120	127	174	194	226	266	304	359	**6.0**	**1500**	
50	64	75	96	102	140	156	181	213	244	288	**4.8**	**1200**	**250**
42	53	62	80	85	117	130	151	178	203	240	**4.0**	**1000**	
38	48	56	72	77	105	117	136	160	183	216	**3.6**	**900**	
31	40	47	60	64	87	97	113	134	153	180	**3.0**	**750**	
B-66 B-86	B-66 B-86	B-66 B-86	B-66 B-86	B-66 B-86	B-68	B-68	B-68	B-70	B-70	B-70	Horizontal Vertical Upright	Dimension Tables	

Notes

1. For ※ marked values, the forced oil lubrication is required at continuous operation.

2. Consult us when the high speed shaft speed is over 1800r/min.

3. When the high speed shaft speed is not shown in the table, find it by the interpolation method.

4. When the high speed shaft speed (N) is lower than 750r/min, find the mechanical power rating (P_N) according to the following formula.

$$P_N = P_{750} \times \frac{N}{750}$$

5. Shown in the table are the ratings for the slow speed shaft.

6. Refer to B42-B45 for the allowable radial and axial load on each shaft.

Size of Reducer 9095	9100	9105	9110	9115	9118	9121	9126	9128	9131	9136	Number of Cooling Fans	H.Speed Shaft Speed r/min	Nominal Reduction Ratio
142	167	186	217	237	273	325	325	352	426	426	-	**1800**	Quadruple Reduction Horizontal Type
137	162	180	210	229	265	317	317	344	417	417	-	**1500**	
131	155	173	200	218	254	306	306	331	402	402	-	**1200**	
125	149	165	191	208	244	294	294	318	388	388	-	**1000**	200
121	145	161	186	203	238	287	287	310	379	379	-	**900**	▼
114	137	152	176	192	226	275	275	296	362	362	-	**750**	250
149	176	196	226	247							-	**1800**	Quadruple Reduction Vertical Type
143	169	188	217	237							-	**1500**	
134	160	178	205	224							-	**1200**	
128	153	169	195	213							-	**1000**	200
123	148	164	189	206							-	**900**	▼
116	140	155	179	195							-	**750**	250
											-	**1800**	Quadruple Reduction Upright Type
											-	**1500**	
											-	**1200**	
											-	**1000**	200
											-	**900**	▼
											-	**750**	250

Ambient Temperature ℃	Temperature Correction Factor Without Fan	With Fan
20	1.00	1.00
30	0.85	0.87
40	0.70	0.73
50	0.55	0.60

Notes

1. Shown in the table are the ratings for models without a fan cooling unit and those with a fan. (-: none fan, 1: with a fan)

2. The values are applicable to continuous operation at ambient temperatures of 20 °C or less. When the temperature is out of the range, refer to the temperature correction factor shown above.

3. When the high speed shaft speed is not shown in the table, find it by interpolation method.

SELECTION Right Angle Shaft Quadruple Reduction Nominal Reduction Ratio 280 ▶ 355

MECHANICAL POWER RATING (kW)

Nominal Reduction Ratio	H.Speed Shaft Speed r/min	L.Speed Shaft Speed r/min	Size of Reducer 9015	9025	9030	9035	9040	9045	9050	9055	9060	9065	9070	9075	9080	9085	9090
280	Exact Reduction Ratio								296.20	291.13	298.24	294.61	280.79	265.69	278.80	258.13	282.35
	1800	6.4							9.9	12.9	15.4	20.0	25.7	35	39	54	57
	1500	5.4							8.2	10.7	12.9	16.7	21.5	29.8	32	45	47
	1200	4.3							6.6	8.6	10.3	13.4	17.2	23.9	26.4	36	38
	1000	3.6							5.5	7.2	8.6	11.1	14.4	19.9	22.0	30	31
	900	3.2							4.9	6.5	7.7	10.0	12.9	17.9	19.8	27.1	28.8
	750	2.7							4.1	5.4	6.4	8.4	10.8	15.0	16.5	22.6	24.0
315	Exact Reduction Ratio								315.95	324.22	332.51	320.94	322.08	310.27	318.63	308.07	308.36
	1800	5.7							9.2	12.8	13.8	20.4	22.5	32	34	48	52
	1500	4.8							7.7	10.7	11.5	17.0	18.7	27.2	28.9	40	43
	1200	3.8							6.2	8.6	9.2	13.6	15.0	21.8	23.1	32	35
	1000	3.2							5.2	7.1	7.7	11.4	12.5	18.2	19.3	26.8	29.3
	900	2.9							4.6	6.4	6.9	10.2	11.3	16.4	17.4	24.2	26.3
	750	2.4							3.9	5.4	5.8	8.5	9.4	13.6	14.5	20.2	22.0
355	Exact Reduction Ratio								367.08	364.25	369.46	367.06	343.56	348.18	355.25	338.28	353.71
	1800	5.1							8.0	10.3	12.5	16.1	21.1	27.3	31	41	45
	1500	4.2							6.6	8.6	10.4	13.4	17.6	22.8	25.9	34	38
	1200	3.4							5.3	6.9	8.3	10.7	14.1	18.3	20.7	27.6	30
	1000	2.8							4.4	5.7	6.9	9.0	11.7	15.2	17.3	23.0	25.5
	900	2.5							4.0	5.2	6.2	8.1	10.6	13.7	15.6	20.7	23.0
	750	2.1							3.3	4.3	5.2	6.7	8.8	11.4	13.0	17.3	19.2
Dimension Tables		Horizontal							B-62	B-62	B-64	B-64	B-64	B-64	B-64	B-64	B-66
		Vertical							B-82	B-82	B-84	B-84	B-84	B-84	B-84	B-84	B-86
		Upright							B-96	B-96	B-98	B-98	B-98	B-98	B-98	B-98	

THERMAL POWER RATING (kW)

Nominal Reduction Ratio	H.Speed Shaft Speed r/min	Number of Cooling Fans	Size of Reducer 9015	9025	9030	9035	9040	9045	9050	9055	9060	9065	9070	9075	9080	9085	9090
Quadruple Reduction Horizontal Type 280 ▼ 355	1800	-							37	43	54	62	75	87	94	109	127
	1500	-							35	41	52	59	72	83	91	105	123
	1200	-							33	39	49	56	68	78	86	100	117
	1000	-							31	36	46	52	64	74	82	94	112
	900	-							30	35	44	50	62	72	80	91	109
	750	-							28	32	42	47	58	67	75	86	103
Quadruple Reduction Vertical Type 280 ▼ 355	1800	-							38	45	56	64	78	90	99	114	133
	1500	-							36	42	54	61	74	85	95	109	128
	1200	-							34	39	50	57	70	80	89	102	121
	1000	-							31	37	47	53	66	75	84	96	114
	900	-							30	35	45	51	63	73	81	93	111
	750	-							28	33	42	48	59	68	76	87	104
Quadruple Reduction Upright Type 280 ▼ 355	1800	-							37	43	54	62	75	87	94	109	
	1500	-							35	41	52	59	72	83	91	105	
	1200	-							33	39	49	56	68	78	86	99	
	1000	-							31	36	46	52	64	74	82	94	
	900	-							30	35	44	50	62	71	80	91	
	750	-							28	32	42	47	58	67	75	86	

SELECTION Right Angle Shaft Quadruple Reduction Nominal Reduction Ratio 280 ▶ 355

Size of Reducer 9095	9100	9105	9110	9115	9118	9121	9126	9128	9131	9136	L.Speed Shaft Speed r/min	H.Speed Shaft Speed r/min	Nominal Reduction Ratio
288.00	266.44	271.77	273.54	270.18	280.39	288.00	288.00	283.41	291.16	291.16	Exact Reduction Ratio		
69	85	104	119	152	177	199	231	281※	309※	365※	**6.4**	**1800**	
57	71	86	99	127	148	166	193	234	258	304	**5.4**	**1500**	
46	57	69	79	102	118	133	155	188	207	244	**4.3**	**1200**	**280**
38	47	58	66	85	99	111	129	157	172	203	**3.6**	**1000**	
34	43	52	60	76	89	100	116	141	155	183	**3.2**	**900**	
28.9	35	43	50	64	74	83	97	118	129	153	**2.7**	**750**	
312.47	301.20	294.86	323.28	309.07	320.45	312.47	312.47	307.49			Exact Reduction Ratio		
61	75	92	101	126	155	183	213	259※			**5.7**	**1800**	
50	63	77	84	105	129	153	178	216			**4.8**	**1500**	
40	50	61	67	84	104	122	142	173			**3.8**	**1200**	**315**
34	42	51	56	70	86	102	119	144			**3.2**	**1000**	
30	38	46	50	63	78	92	107	130			**2.9**	**900**	
25.5	31	38	42	52	65	77	89	108			**2.4**	**750**	
341.25	344.23	333.33	369.46	365.26	356.86	341.25	341.25	347.61			Exact Reduction Ratio		
55	66	81	88	106	139	168	195	229※			**5.1**	**1800**	
46	55	68	73	89	116	140	163	191			**4.2**	**1500**	
37	44	54	59	71	93	112	131	153			**3.4**	**1200**	**355**
31	37	45	49	59	78	93	109	128			**2.8**	**1000**	
28.1	33	41	44	53	70	84	98	115			**2.5**	**900**	
23.4	27.8	34	37	44	58	70	82	96			**2.1**	**750**	
B-66	B-66	B-66	B-66	B-66	B-68	B-68	B-68	B-70	B-70	B-70	Horizontal	Dimension Tables	
B-86	B-86	B-86	B-86	B-86							Vertical		
											Upright		

Notes

1. For ※ marked values, the forced oil lubrication is required at continuous operation.

2. Consult us when the high speed shaft speed is over 1800r/min.

3. When the high speed shaft speed is not shown in the table, find it by the interpolation method.

4. When the high speed shaft speed (N) is lower than 750r/min, find the mechanical power rating (P_N) according to the following formula.

$$P_N = P_{750} \times \frac{N}{750}$$

5. Shown in the table are the ratings for the slow speed shaft.

6. Refer to B42-B45 for the allowable radial and axial load on each shaft.

Size of Reducer 9095	9100	9105	9110	9115	9118	9121	9126	9128	9131	9136	Number of Cooling Fans	H.Speed Shaft Speed r/min	Nominal Reduction Ratio
137	167	180	208	228	248	304	304	340	421	421	-	**1800**	Quadruple Reduction Horizontal Type
132	162	175	202	220	240	295	295	332	412	412	-	**1500**	
126	155	167	192	210	228	282	282	319	397	397	-	**1200**	
120	149	160	184	200	218	270	270	306	383	383	-	**1000**	280
116	145	155	179	195	212	263	263	299	374	374	-	**900**	▼
110	138	147	169	184	200	250	250	285	358	358	-	**750**	355
143	176	189	217	237							-	**1800**	Quadruple Reduction Vertical Type
137	169	182	208	227							-	**1500**	
129	160	172	197	215							-	**1200**	
123	153	164	188	204							-	**1000**	280
119	148	159	182	198							-	**900**	▼
112	140	150	172	187							-	**750**	355
											-	**1800**	Quadruple Reduction Upright Type
											-	**1500**	
											-	**1200**	
											-	**1000**	280
											-	**900**	▼
											-	**750**	355

Ambient Temperature ℃	Temperature Correction Factor Without Fan	With Fan
20	1.00	1.00
30	0.85	0.87
40	0.70	0.73
50	0.55	0.60

Notes

1. Shown in the table are the ratings for models without a fan cooling unit and those with a fan. (-: none fan, 1: with a fan)

2. The values are applicable to continuous operation at ambient temperatures of 20 °C or less. When the temperature is out of the range, refer to the temperature correction factor shown above.

3. When the high speed shaft speed is not shown in the table, find it by interpolation method.

SELECTION Right Angle Shaft Quadruple Reduction Nominal Reduction Ratio 400 ▶ 450

MECHANICAL POWER RATING (kW)

Nominal Reduction Ratio	H.Speed Shaft Speed r/min	L.Speed Shaft Speed r/min	Size of Reducer 9015	9025	9030	9035	9040	9045	9050	9055	9060	9065	9070	9075	9080	9085	9090
400	Exact Reduction Ratio									388.53		409.25		399.38		386.60	
	1800	4.5								9.7		14.4		23.8		36	
	1500	3.8								8.1		12.0		19.9		30	
	1200	3.0								6.5		9.6		15.9		24.2	
	1000	2.5								5.4		8.0		13.3		20.2	
	900	2.3								4.8		7.2		12.0		18.2	
	750	1.9								4.0		6.0		10.0		15.1	
450	Exact Reduction Ratio									451.41		454.72		426.01		431.03	
	1800	4.0								8.3		13.0		22.4		32	
	1500	3.3								6.9		10.8		18.6		27.1	
	1200	2.7								5.6		8.7		14.9		21.7	
	1000	2.2								4.6		7.2		12.5		18.1	
	900	2.0								4.2		6.5		11.2		16.3	
	750	1.7								3.5		5.4		9.4		13.6	
Dimension Tables		Horizontal								B-62		B-64		B-64		B-64	
		Vertical								B-82		B-84		B-84		B-84	
		Upright								B-96		B-98		B-98		B-98	

THERMAL POWER RATING (kW)

Nominal Reduction Ratio	H.Speed Shaft Speed r/min	Number of Cooling Fans	Size of Reducer 9015	9025	9030	9035	9040	9045	9050	9055	9060	9065	9070	9075	9080	9085	9090
Quadruple Reduction Horizontal Type 400 ▼ 450	1800	-								45		64		86		110	
	1500	-								43		61		83		106	
	1200	-								40		58		78		100	
	1000	-								37		54		74		95	
	900	-								36		52		71		92	
	750	-								33		49		67		87	
Quadruple Reduction Vertical Type 400 ▼ 450	1800	-								46		66		89		114	
	1500	-								44		63		85		109	
	1200	-								41		59		80		103	
	1000	-								38		55		75		97	
	900	-								36		53		72		94	
	750	-								34		49		68		88	
Quadruple Reduction Upright Type 400 ▼ 450	1800	-								45		64		86		110	
	1500	-								43		61		83		106	
	1200	-								40		58		78		100	
	1000	-								37		54		74		95	
	900	-								36		52		71		92	
	750	-								33		49		67		87	

SELECTION Right Angle Shaft Quadruple Reduction Nominal Reduction Ratio 400 ▶ 450

Size of Reducer 9095	9100	9105	9110	9115	9118	9121	9126	9128	9131	9136	L.Speed Shaft Speed r/min	H.Speed Shaft Speed r/min	Nominal Reduction Ratio
391.44		380.94		417.44	407.84						Exact Reduction Ratio		
48		71		93	122						**4.5**	**1800**	
40		59		78	102						**3.8**	**1500**	
32		48		62	81						**3.0**	**1200**	**400**
27.2		40		52	68						**2.5**	**1000**	
24.5		36		47	61						**2.3**	**900**	
20.4		30		39	51						**1.9**	**750**	
											Exact Reduction Ratio		
											4.0	**1800**	
											3.3	**1500**	
											2.7	**1200**	**450**
											2.2	**1000**	
											2.0	**900**	
											1.7	**750**	
B-66		B-66		B-66	B-68						Horizontal	Dimension Tables	
B-86		B-86		B-86							Vertical		
											Upright		

Notes

1. For ※ marked values, the forced oil lubrication is required at continuous operation.

2. Consult us when the high speed shaft speed is over 1800r/min.

3. When the high speed shaft speed is not shown in the table, find it by the interpolation method.

4. When the high speed shaft speed (N) is lower than 750r/min, find the mechanical power rating (P_N) according to the following formula.

$$P_N = P_{750} \times \frac{N}{750}$$

5. Shown in the table are the ratings for the slow speed shaft.

6. Refer to B42-B45 for the allowable radial and axial load on each shaft.

Size of Reducer 9095	9100	9105	9110	9115	9118	9121	9126	9128	9131	9136	Number of Cooling Fans	H.Speed Shaft Speed r/min	Nominal Reduction Ratio
137		179		225	246						-	**1800**	Quadruple Reduction Horizontal Type
133		174		218	238						-	**1500**	
127		166		208	226						-	**1200**	
121		159		198	216						-	**1000**	400
117		155		193	210						-	**900**	▼
111		147		183	198						-	**750**	450
144		188		234							-	**1800**	Quadruple Reduction Vertical Type
138		181		225							-	**1500**	
130		171		213							-	**1200**	
123		163		202							-	**1000**	400
119		158		196							-	**900**	▼
113		149		185							-	**750**	450
											-	**1800**	Quadruple Reduction Upright Type
											-	**1500**	
											-	**1200**	
											-	**1000**	400
											-	**900**	▼
											-	**750**	450

Ambient Temperature °C	Temperature Correction Factor Without Fan	With Fan
20	1.00	1.00
30	0.85	0.87
40	0.70	0.73
50	0.55	0.60

Notes

1. Shown in the table are the ratings for models without a fan cooling unit and those with a fan. (-: none fan, 1: with a fan)

2. The values are applicable to continuous operation at ambient temperatures of 20 °C or less. When the temperature is out of the range, refer to the temperature correction factor shown above.

3. When the high speed shaft speed is not shown in the table, find it by interpolation method.

SELECTION Allowable Radial and Axial Loads on Slow Speed Right Angle shaft

Allowable Radial Load (kN)

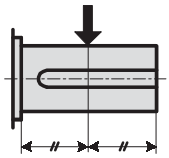

Sheet 1

Applicable to configurations: Double Reduction RR, LL/

	L.Speed Shaft Speed r/min	Size of Reducer																
		9015	9025	9030	9035	9040	9045	9050	9055	9060	9065	9070	9075	9080	9085	9090	9095	9100
Standard bearing model	250	11.8	17.7	17.7	29.4	29.9	32.4	37.8	46.6	39.7	49.1	44.1	77.0	77.0	100.1	100.1	137.8	139.8
	160	11.8	17.7	20.1	31.4	32.4	33.8	39.7	48.1	41.7	50.5	46.1	89.0	89.0	108.9	108.9	145.7	157.5
	100	11.8	17.7	25.0	35.3	38.7	39.2	47.1	53.5	47.6	54.4	54.4	99.0	99.0	122.1	122.1	147.6	166.3
	63	11.8	17.7	26.5	35.3	42.2	47.1	54.9	62.3	58.9	64.3	65.2	131.5	131.5	125.6	125.6	143.7	165.3
	40	11.8	17.7	26.5	35.3	42.2	49.1	54.9	67.7	71.1	78.0	79.0	141.0	141.0	125.1	125.1	137.8	164.8
	≦ 25	11.8	17.7	26.5	35.3	42.2	49.1	54.9	67.7	81.4	95.2	99.1	139.5	139.5	122.6	122.6	135.4	163.3
Heavy duty bearing model	250									71.1	93.7	70.1	122.5	122.5	141.8	141.8	158.9	181.0
	160									78.0	94.7	77.5	137.5	137.5	132.4	132.4	151.6	174.6
	100									81.4	98.1	92.2	149.5	149.5	127.0	127.0	147.6	166.8
	63									81.4	98.1	114.8	149.0	149.0	125.6	125.6	143.7	165.8
	40									81.4	98.1	117.7	148.5	148.5	125.1	125.1	137.8	165.3
	≦ 25									81.4	98.1	117.7	147.0	147.0	122.6	122.6	135.4	163.8

Sheet 2

Applicable to configurations: Double Reduction RL, LR/

	L.Speed Shaft Speed r/min	Size of Reducer																
		9015	9025	9030	9035	9040	9045	9050	9055	9060	9065	9070	9075	9080	9085	9090	9095	9100
Standard bearing model	250	8.3	15.2	9.8	21.6	19.1	21.6	22.6	31.4	16.7	28.4	17.2	44.0	44.0	58.4	58.4	97.6	80.4
	160	9.8	17.7	12.3	23.1	20.6	23.1	24.0	31.4	18.1	27.0	17.7	55.5	55.5	64.3	64.3	103.0	96.1
	100	11.8	17.7	16.7	29.4	26.0	27.5	28.4	35.3	22.1	30.4	25.5	63.5	63.5	74.6	74.6	110.9	105.9
	63	11.8	17.7	21.6	35.3	32.9	35.3	37.3	42.7	33.4	38.3	33.8	95.0	95.0	104.5	104.5	148.1	153.5
	40	11.8	17.7	26.5	35.3	41.7	43.7	48.6	55.4	45.1	51.5	47.6	129.0	129.0	146.7	146.7	172.2	203.6
	≦ 25	11.8	17.7	26.5	35.3	42.2	49.1	54.9	67.7	60.8	68.7	67.7	167.0	167.0	171.2	171.2	171.2	215.3
Heavy duty bearing model	250									46.1	74.6	40.2	90.0	90.0	114.8	114.8	156.0	150.6
	160									52.0	72.1	45.6	103.5	103.5	125.1	125.1	164.8	170.7
	100									60.3	79.0	59.4	116.0	116.0	140.8	140.8	176.1	187.4
	63									81.4	96.6	80.0	152.5	152.5	174.1	174.1	186.9	218.8
	40									81.4	98.1	108.9	192.0	192.0	191.8	191.8	193.7	241.8
	≦ 25									81.4	98.1	117.7	180.5	180.5	171.2	171.2	171.2	214.8

Allowable Axial Load (kN)

	L.Speed Shaft Speed r/min	Size of Reducer																
		9015	9025	9030	9035	9040	9045	9050	9055	9060	9065	9070	9075	9080	9085	9090	9095	9100
Standard bearing model	250	9.3	11.4	14.7	23.1	26.5	31.4	32.9	31.9	27.0	43.2	28.0	28.0	23.5	23.5	31.4	52.0	45.1
	160	9.3	11.4	18.1	23.1	28.4	31.4	33.4	31.9	28.9	43.2	28.4	28.4	27.5	27.5	34.3	53.0	53.0
	100	9.3	11.4	24.5	23.1	32.9	31.4	37.3	31.9	34.3	43.2	39.7	39.7	32.9	32.9	43.2	59.4	58.4
	63	9.3	11.4	26.5	23.1	32.9	31.4	37.3	31.9	49.1	43.2	52.5	52.5	45.6	45.6	54.0	59.8	81.4
	40	9.3	11.4	26.5	23.1	32.9	31.4	37.3	31.9	49.1	43.2	61.4	61.4	63.3	60.3	59.8	59.8	83.4
	≦ 25	9.3	11.4	26.5	23.1	32.9	31.4	37.3	31.9	49.1	43.2	61.4	61.4	67.7	60.3	59.8	59.8	83.4
Heavy duty bearing model	250									23.1	34.8	18.6	18.6	56.9	56.9	59.8	59.8	83.4
	160									25.0	33.4	21.1	21.1	56.9	56.9	59.8	59.8	83.4
	100									29.4	36.8	27.5	27.5	56.9	56.9	59.8	59.8	83.4
	63									39.2	43.2	36.3	36.3	56.9	56.9	59.8	59.8	83.4
	40									39.2	43.2	49.1	49.1	56.9	56.9	59.8	59.8	83.4
	≦ 25									39.2	43.2	56.9	56.9	56.9	56.9	59.8	59.8	83.4

SELECTION Allowable Radial and Axial Loads on Slow Speed Right Angle shaft

Triple Reduction RL, LR/Quadruple Reduction RR, LL

Size of Reducer									L.Speed Shaft Speed r/min	
9105	**9110**	**9115**	**9118**	**9121**	**9126**	**9128**	**9131**	**9136**		
192.3	167.8	222.7							250	Standard bearing model
200.6	174.1	234.9							160	
183.9	184.9	245.7	391.9	352.7	330.6	315.4	403.2	391.9	100	
178.1	190.8	303.1	387.5	369.3	341.4	328.6	462.5	430.7	63	
173.6	194.7	320.8	460.1	449.3	401.2	409.6	572.4	511.1	40	
167.3	184.9	316.4	448.3	554.8	497.4	534.6	733.8	638.6	≦ 25	
213.9	250.6	316.9							250	Heavy duty bearing model
200.6	214.8	334.5							160	
183.9	195.2	340.9							100	
178.1	190.8	333.5							63	
173.6	194.7	320.8							40	
167.3	184.9	316.4							≦ 25	

Unit: kN

Triple Reduction RR, LL/Quadruple Reduction RL, LR

Size of Reducer									L.Speed Shaft Speed r/min	
9105	**9110**	**9115**	**9118**	**9121**	**9126**	**9128**	**9131**	**9136**		
131.5	94.2	152.5							250	Standard bearing model
138.3	92.2	155.0							160	
146.7	101.0	167.3	312.0	228.1	197.7	159.4	203.6	190.3	100	
200.1	144.7	220.7	292.3	244.3	206.0	170.7	260.9	218.8	63	
235.4	199.1	250.2	373.3	322.7	257.0	250.2	369.3	286.5	40	
304.1	272.7	353.2	460.1	427.2	348.7	373.3	528.3	398.3	≦ 25	
213.4	191.3	248.7							250	Heavy duty bearing model
223.2	197.7	261.4							160	
236.9	210.4	274.2							100	
301.7	267.8	341.9							63	
304.1	323.7	382.1							40	
304.1	323.7	374.7							≦ 25	

Unit: kN

Overhang Factor

Overhang Member	Overhang Factor
Sprocket (Single Row)	1
Sprocket (Double Row)	1.25
Gears	1.25

Notes

1. The value shown in the table is allowable radial load when it is applied to the center of the solid shaft (except hollow shaft).
   Consult us when a load is not in the center.
2. Consult us for the blanks in the table.
3. Consult us when the radial load is applied upward.
4. In case of double projection shaft (RB,LB)
   (1) See sheet1 when the radial load is applied only to the shaft1.
   (2) See sheet2 when the radial load is applied only to the shaft2.
   (3) Consult us when the radial load is applied to both shafts.
5. Refer to B-6 to check overhang load, and calculate equivalent load at peak load value.
   Be careful under following condition because large peak load may be generated.
   Application: When the inertia is large, such as for crane driving, slewing, etc.
   Motor: inline motor
   Connecting method: Sprocket or gear
   Consult us when the peak load is larger than allowable value.

Size of Reducer									L.Speed Shaft Speed r/min	
9105	**9110**	**9115**	**9118**	**9121**	**9126**	**9128**	**9131**	**9136**		
50.0	50.0	76.5							250	Standard bearing model
49.5	49.5	76.5							160	
54.0	54.0	83.4	119.7	121.6	116.7	91.2	113.3	107.9	100	
74.6	74.6	83.4	119.7	121.6	121.6	96.6	140.3	122.6	63	
83.4	83.4	83.4	119.7	121.6	121.6	134.9	191.3	155.5	40	
83.4	83.4	83.4	119.7	121.6	121.6	144.2	192.3	192.3	≦ 25	
83.4	83.4	83.4							250	Heavy duty bearing model
83.4	83.4	83.4							160	
83.4	83.4	83.4							100	
83.4	83.4	83.4							63	
83.4	83.4	83.4							40	
83.4	83.4	83.4							≦ 25	

Unit: kN

	RB	LB
Double Reduction Ratio	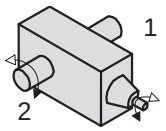	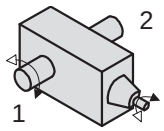
Triple Reduction Ratio	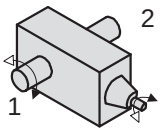	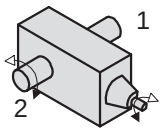
Quadruple Reduction Ratio	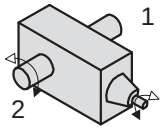	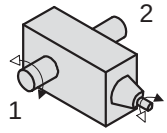

SELECTION Allowable Radial and Axial Loads on Slow Speed Right Angle shaft

Allowable Radial Load (kgf)

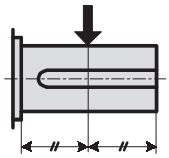

Sheet 1

Applicable to configurations: Double Reduction RR, LL/

	L.Speed Shaft Speed r/min	Size of Reducer																
		9015	**9025**	**9030**	**9035**	**9040**	**9045**	**9050**	**9055**	**9060**	**9065**	**9070**	**9075**	**9080**	**9085**	**9090**	**9095**	**9100**
Standard bearing model	250	1200	1800	1800	3000	3050	3300	3850	4750	4050	5000	4500	7850	7850	10200	10200	14050	14250
	160	1200	1800	2050	3200	3300	3450	4050	4900	4250	5150	4700	9050	9050	11100	11100	14850	16050
	100	1200	1800	2550	3600	3950	4000	4800	5450	4850	5550	5550	10100	10100	12450	12450	15050	16950
	63	1200	1800	2700	3600	4300	4800	5600	6350	6000	6550	6650	13400	13400	12800	12800	14650	16850
	40	1200	1800	2700	3600	4300	5000	5600	6900	7250	7950	8050	14350	14350	12750	12750	14050	16800
	≦ 25	1200	1800	2700	3600	4300	5000	5600	6900	8300	9700	10100	14200	14200	12500	12500	13800	16650
Heavy duty bearing model	250									7250	9550	7150	12500	12500	14450	14450	16200	18450
	160									7950	9650	7900	14000	14000	13500	13500	15450	17800
	100									8300	10000	9400	15250	15250	12950	12950	15050	17000
	63									8300	10000	11700	15200	15200	12800	12800	14650	16900
	40									8300	10000	12000	15150	15150	12750	12750	14050	16850
	≦ 25									8300	10000	12000	15000	15000	12500	12500	13800	16700

Sheet 2

Applicable to configurations: Double Reduction RL, LR/

	L.Speed Shaft Speed r/min	Size of Reducer																
		9015	**9025**	**9030**	**9035**	**9040**	**9045**	**9050**	**9055**	**9060**	**9065**	**9070**	**9075**	**9080**	**9085**	**9090**	**9095**	**9100**
Standard bearing model	250	850	1550	1000	2200	1950	2200	2300	3200	1700	2900	1750	4500	4500	5950	5950	9950	8200
	160	1000	1800	1250	2350	2100	2350	2450	3200	1850	2750	1800	5650	5650	6550	6550	10500	9800
	100	1200	1800	1700	3000	2650	2800	2900	3600	2250	3100	2600	6450	6450	7600	7600	11300	10800
	63	1200	1800	2200	3600	3350	3600	3800	4350	3400	3900	3450	9700	9700	10650	10650	15100	15650
	40	1200	1800	2700	3600	4250	4450	4950	5650	4600	5250	4850	13150	13150	14950	14950	17550	20750
	≦ 25	1200	1800	2700	3600	4300	5000	5600	6900	6200	7000	6900	17000	17000	17450	17450	17450	21950
Heavy duty bearing model	250									4700	7600	4100	9150	9150	11700	11700	15900	15350
	160									5300	7350	4650	10550	10550	12750	12750	16800	17400
	100									6150	8050	6050	11800	11800	14350	14350	17950	19100
	63									8300	9850	8150	15550	15550	17750	17750	19050	22300
	40									8300	10000	11100	19550	19550	19550	19550	19750	24650
	≦ 25									8300	10000	12000	18400	18400	17450	17450	17450	21900

Allowable Axial Load (kgf)

	L.Speed Shaft Speed r/min	Size of Reducer																
		9015	**9025**	**9030**	**9035**	**9040**	**9045**	**9050**	**9055**	**9060**	**9065**	**9070**	**9075**	**9080**	**9085**	**9090**	**9095**	**9100**
Standard bearing model	250	950	1160	1500	2350	2700	3200	3350	3250	2750	4400	2850	2850	2400	2400	3200	5300	4600
	160	950	1160	1850	2350	2900	3200	3400	3250	2950	4400	2900	2900	2800	2800	3500	5400	5400
	100	950	1160	2500	2350	3350	3200	3800	3250	3500	4400	4050	4050	3350	3350	4400	6050	5950
	63	950	1160	2700	2350	3350	3200	3800	3250	5000	4400	5350	5350	4650	4650	5500	6100	8300
	40	950	1160	2700	2350	3350	3200	3800	3250	5000	4400	6260	6260	6450	6150	6100	6100	8500
	≦ 25	950	1160	2700	2350	3350	3200	3800	3250	5000	4400	6260	6260	6900	6150	6100	6100	8500
Heavy duty bearing model	250									2350	3550	1900	1900	5800	5800	6100	6100	8500
	160									2550	3400	2150	2150	5800	5800	6100	6100	8500
	100									3000	3750	2800	2800	5800	5800	6100	6100	8500
	63									4000	4400	3700	3700	5800	5800	6100	6100	8500
	40									4000	4400	5000	5000	5800	5800	6100	6100	8500
	≦ 25									4000	4400	5800	5800	5800	5800	6100	6100	8500

SELECTION Allowable Radial and Axial Loads on Slow Speed Right Angle shaft

Triple Reduction RL, LR/Quadruple Reduction RR ,LL

Size of Reducer									L.Speed Shaft Speed r/min	
9105	**9110**	**9115**	**9118**	**9121**	**9126**	**9128**	**9131**	**9136**		
19600	17100	22700							250	Standard bearing model
20450	17750	23950							160	
18750	18850	25050	39950	35950	33700	32150	41100	39950	100	
18150	19450	30900	39500	37650	34800	33500	47150	43900	63	
17700	19850	32700	46900	45800	40900	41750	58350	52100	40	
17050	18850	32250	45700	56550	50700	54500	74800	65100	≦ 25	
21800	25550	32300							250	Heavy duty bearing model
20450	21900	34100							160	
18750	19900	34750							100	
18150	19450	34000							63	
17700	19850	32700							40	
17050	18850	32250							≦ 25	

Unit: kgf

Triple Reduction RR, LL/Quadruple Reduction RL ,LR

Size of Reducer									L.Speed Shaft Speed r/min	
9105	**9110**	**9115**	**9118**	**9121**	**9126**	**9128**	**9131**	**9136**		
13400	9600	15550							250	Standard bearing model
14100	9400	15800							160	
14950	10300	17050	31800	23250	20150	16250	20750	19400	100	
20400	14750	22500	29800	24900	21000	17400	26600	22300	63	
24000	20300	25500	38050	32900	26200	25500	37650	29200	40	
31000	27800	36000	46900	43550	35550	38050	53850	40600	≦ 25	
21750	19500	25350							250	Heavy duty bearing model
22750	20150	26650							160	
24150	21450	27950							100	
30750	27300	34850							63	
31000	33000	38950							40	
31000	33000	38200							≦ 25	

Unit: kgf

Overhang Factor

Overhang Member	Overhang Factor
Sprocket (Single Row)	1
Sprocket (Double Row)	1.25
Gears	1.25

Notes

1. The value shown in the table is allowable radial load when it is applied to the center of the solid shaft (except hollow shaft).
   Consult us when a load is not in the center.
2. Consult us for the blanks in the table.
3. Consult us when the radial load is applied upward.
4. In case of double projection shaft (RB,LB)
   (1) See sheet1 when the radial load is applied only to the shaft1.
   (2) See sheet2 when the radial load is applied only to the shaft2.
   (3) Consult us when the radial load is applied to both shafts.
5. Refer to B-6 to check overhang load, and calculate equivalent load at peak load value.
   Be careful under following condition because large peak load may be generated.
   Application: When the inertia is large, such as for crane driving, slewing, etc.
   Motor: inline motor
   Connecting method: Sprocket or gear
   Consult us when the peak load is larger than allowable value.

Size of Reducer									L.Speed Shaft Speed r/min	
9105	**9110**	**9115**	**9118**	**9121**	**9126**	**9128**	**9131**	**9136**		
5100	5100	7800							250	Standard bearing model
5050	5050	7800							160	
5500	5500	8500	12200	12400	11900	9300	11550	11000	100	
7600	7600	8500	12200	12400	12400	9850	14300	12500	63	
8500	8500	8500	12200	12400	12400	13750	19500	15850	40	
8500	8500	8500	12200	12400	12400	14700	19600	19600	≦ 25	
8500	8500	8500							250	Heavy duty bearing model
8500	8500	8500							160	
8500	8500	8500							100	
8500	8500	8500							63	
8500	8500	8500							40	
8500	8500	8500							≦ 25	

Unit: kgf

	RB	LB
Double Reduction Ratio	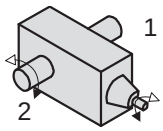	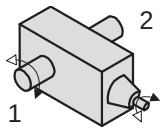
Triple Reduction Ratio	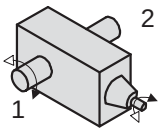	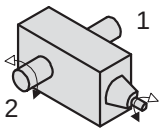
Quadruple Reduction Ratio	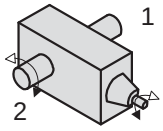	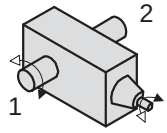

DIMENSIONS Right Angle Shaft Double Reduction Horizontal Mounting 9015 ▶ 9055

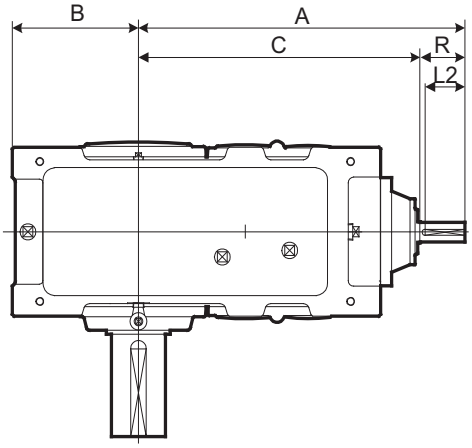

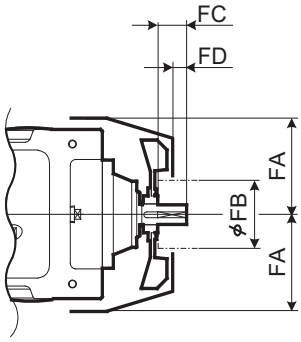

With Fan

Refer to the page C-20 for details.

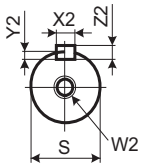

High Speed Shaft

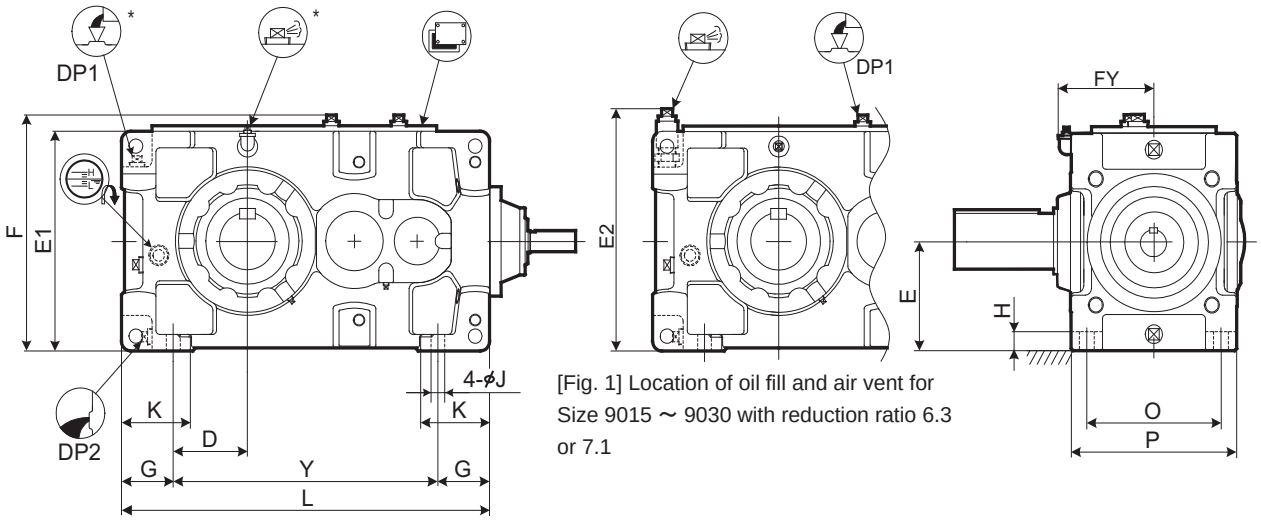

[Fig. 1] Location of oil fill and air vent for Size 9015 ～ 9030 with reduction ratio 6.3 or 7.1

* Location of oil fill and air vent changes for Size 9015 ～ 9030 with reduction ratio 6.3 or 7.1. Refer to Fig. 1.

Size	A	B	C	D	E	E1	E2	F	FY	G	H	J	K	L	O	P	Y
9015	507	160	427	90	135	270	309	299	129	70	22	15	95	440	170	205	300
9025	545	175	465	95	155	310	346	339	142	80	25	19	110	505	195	235	345
9030	645	200	535	110	160	320	353	349	154	90	28	24	120	590	215	265	410
9035	676	219	566	129	185	370		399	154	90	28	24	120	640	215	265	460
9040	705	235	595	120	200	400		431	172	115	30	28	150	685	255	315	455
9045	744	256	634	141	220	440		471	172	115	30	28	150	745	255	315	515
9050	755	255	645	138.5	210	420		451	192	116.5	32	28	150	775	285	345	542
9055	794	286	684	171	245	490		521	192	115	32	28	150	845	285	345	615

Size	Hight Speed Shaft							Fan				DP1	DP2	Wt. kg	Oil Qty. L
	R	S	W2/Depth	Key X2	Key Y2	Key Z2	L2	FA	FB	FC	FD				
9015	80	28k6	M12/28	8	4	7	70	125	125	50	30	3/4"	3/4"	95	5
9025	80	35k6	M12/28	10	5	8	70	135	140	50	30	3/4"	3/4"	140	7
9030	110	40k6	M16/36	14	5.5	9	95	150	140	80	52	3/4"	3/4"	205	10
9035	110	40k6	M16/36	14	5.5	9	95	150	140	80	52	3/4"	3/4"	225	12
9040	110	45k6	M16/36	14	5.5	9	95	170	160	80	52	1"	1"	305	16
9045	110	45k6	M16/36	14	5.5	9	95	170	160	80	52	1"	1"	365	18
9050	110	50k6	M16/36	14	5.5	9	95	190	160	80	52	1"	1"	435	21
9055	110	50k6	M16/36	14	5.5	9	95	190	160	80	52	1"	1"	495	28

Unit: mm

1. Key and keyways are based on ISO R773-1969 Close keys (JIS B1301-1996 Parallel key in fastening type)
2. The oil quantity is approximate. Oil shall be supplied within the range shown on the oil gauge.
3. Refer to the page C-12 for dimensions shown in these drawings.
4. Refer to the page C-24 for the dimension of optional parts.

DIMENSIONS Right Angle Shaft Double Reduction Horizontal Mounting 9015 ▶ 9055

Slow Speed Shaft

Solid Shaft	Hollow Shaft (Shrink Disk Type)	Hollow Shaft (Key Type)
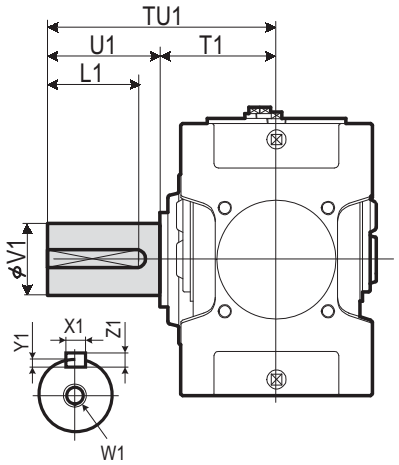	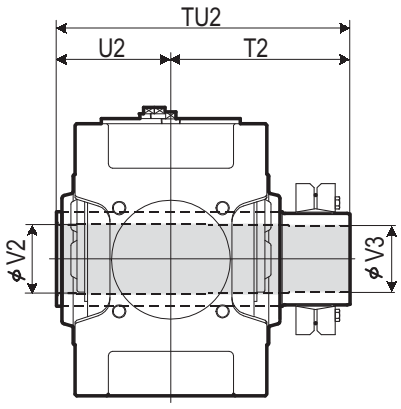 Refer to the page C-18 for details.	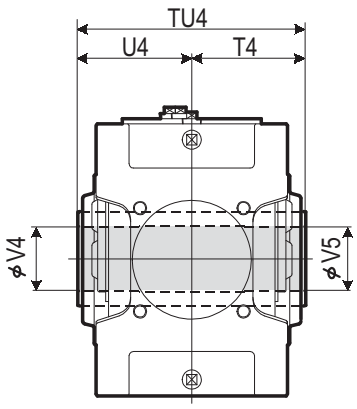 Refer to the page C-18 for details.

Size	Solid Shaft									Hollow Shaft (Shrink Disk Type)					Hollow Shaft (Key Type)				
	TU1	T1	U1	V1	W1/Depth	Key X1	Key Y1	Key Z1	Key L1	TU2	T2	U2	V2	V3	TU4	T4	U4	V4	V5
9015	245	135	110	58m6	M20/42	18	7	11	95	328	193	135	63	60	270	135	135	55	55
9025	285	145	140	70m6	M20/42	20	7.5	12	125	358	213	145	73	70	300	150	150	65	65
9030	330	160	170	80m6	M20/42	22	9	14	150	393	233	160	83	80	330	165	165	75	75
9035	330	160	170	90m6	M20/42	25	9	14	150	403	243	160	88	85	330	165	165	85	85
9040	349	179	170	95m6	M24/50	25	9	14	150	448	268	180	98	95	360	180	180	90	90
9045	391	181	210	105m6	M24/50	28	10	16	190	463	283	180	108	105	370	185	185	105	105
9050	411	201	210	110m6	M24/50	28	10	16	190	503	303	200	108	105	410	205	205	105	105
9055	411	201	210	120m6	M24/50	32	11	18	185	528	323	205	123	120	410	205	205	115	115

Unit: mm

Standard Shaft Arrangement Configuration

RL	RR	RB	LR	LL	LB
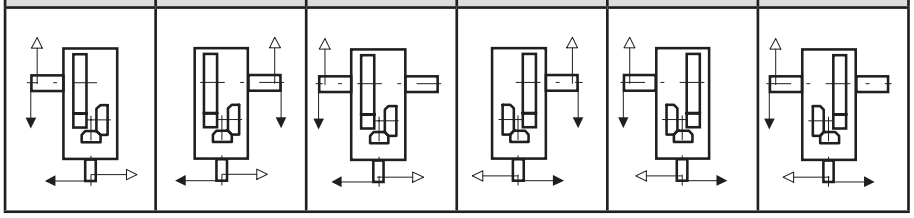					

Nomenclature

P H A [Size] R 2 - [Shaft Arrangement] [Low Speed Shaft Type] [Fan] - [Nominal Reduction Ratio]

Size: 9015, 9025, 9030, 9035, 9040, 9045, 9050, 9055

Shaft Arrangement: RL, RR, RB, LR, LL, LB

Fan:
- (blank) : Without Fan
- F : With Fan

Low Speed Shaft Type:
- (blank) : Solid Shaft
- T : Hollow Shaft (Shrink Disk type)
- K : Hollow Shaft (Key type)

Size	Nominal Reduction Ratio 6.3	7.1	8	9	10	11.2	12.5	14	16	18	20	22.4
9015	○	○	○	○	○	○	○	○	○	○		
9025	○	○	○	○	○	○	○	○	○	○		
9030	○	○	○	○	○	○	○	○	○	○		
9035			○	○	○	○	○	○	○	○	○	○
9040	○	○	○	○	○	○	○	○	○	○		
9045			○	○	○	○	○	○	○	○	○	○
9050	○	○	○	○	○	○	○	○	○	○		
9055				○	○	○	○	○	○	○	○	○

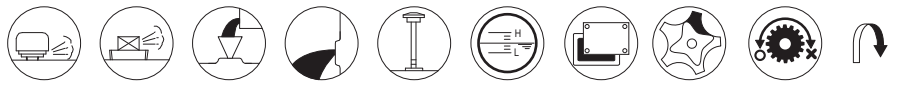

Air Breather, Air Vent, Oil Fill, Drain Plug, Dip Stick, Oil Gauge, Inspection Cover, Oil Pump, Backstop (Option), Opposite Side

DIMENSIONS Right Angle Shaft Double Reduction Horizontal Mounting 9060 ▶ 9085

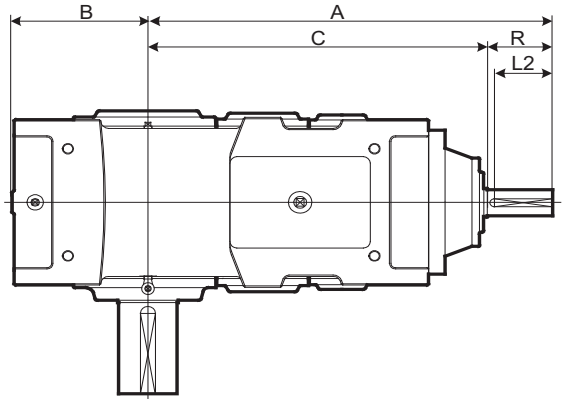

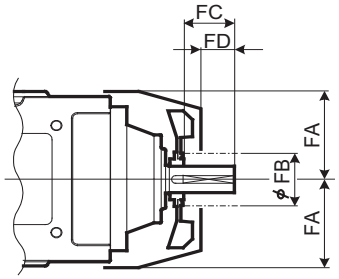

With Fan

Refer to the page C-20 for details.

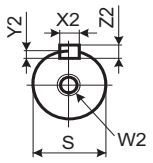

High Speed Shaft

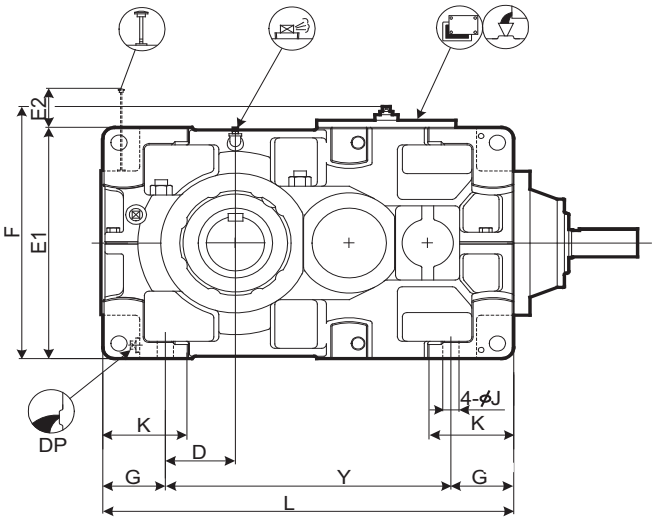

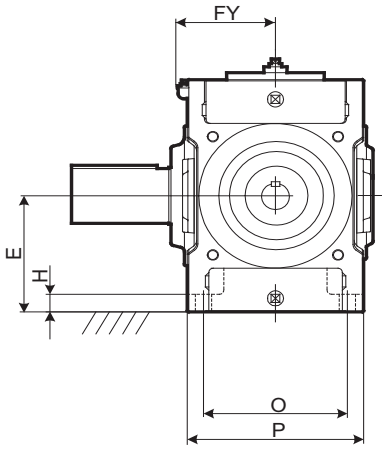

Size	A	B	C	D	E	E1	E2	F	FY	G	H	J	K	L	O	P	Y
9060	865	299	725	151	265	530	183	578	212	135	35	35	180	885	310	380	615
9065	911	338	771	190	300	600	148	648	212	135	35	35	180	970	310	380	700
9070	965	336	825	163	300	600	213	648	237	160	40	42	215	1020	350	430	700
9075	1018	383	878	210	335	670	178	718	237	160	52	42	220	1120	350	430	800
9080	1080	378	940	205	335	670	236	718	257	160	52	42	220	1155	380	460	835
9085	1136	422	996	249	375	750	196	798	257	160	52	42	220	1255	380	460	935

Size	Hight Speed Shaft							Fan				DP	Wt. kg	Oil Qty. L
	R	S	W2/Depth	Key				FA	FB	FC	FD			
				X2	Y2	Z2	L2							
9060	140	60m6	M20/42	18	7	11	125	220	160	105	65	1"	600	25
9065	140	60m6	M20/42	18	7	11	125	220	160	105	65	1"	725	29
9070	140	65m6	M20/42	18	7	11	125	245	200	105	65	1"	920	37
9075	140	65m6	M20/42	18	7	11	125	245	200	105	65	1"	1170	46
9080	140	75m6	M20/42	20	7.5	12	125	270	225	105	60	1"	1300	53
9085	140	75m6	M20/42	20	7.5	12	125	270	225	105	60	1"	1560	67

Unit: mm

1. Key and keyways are based on ISO R773-1969 Close keys (JIS B1301-1996 Parallel key in fastening type)
2. The oil quantity is approximate. Oil shall be supplied within the range shown on the oil gauge.
3. Refer to the page C-14 for dimensions not shown in these drawings.
4. Refer to the page C-27 for the dimension of optional parts.

DIMENSIONS Right Angle Shaft Double Reduction Horizontal Mounting 9060 ▶ 9085

Slow Speed Shaft

Solid Shaft	Hollow Shaft (Shrink Disk Type)	Hollow Shaft (Key Type)
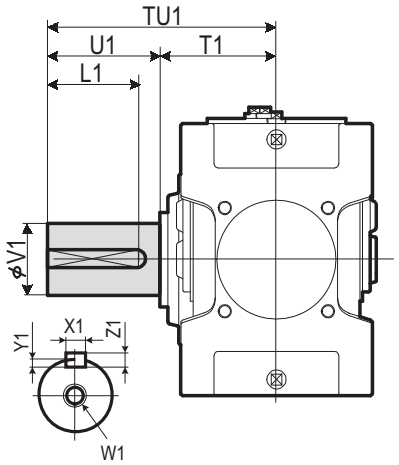	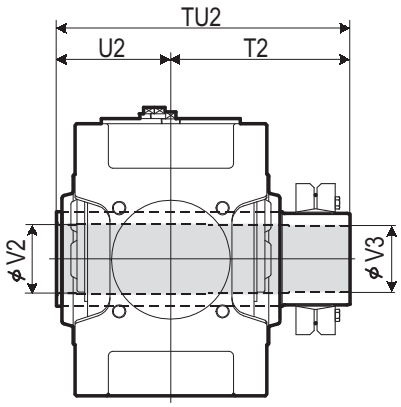 Refer to the page C-18 for details.	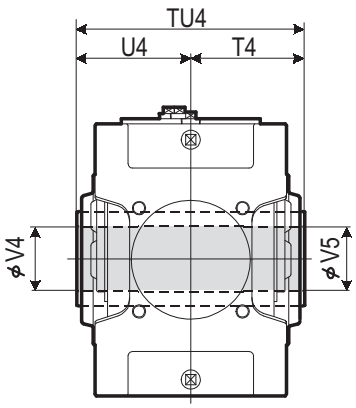 Refer to the page C-18 for details.

Size	Solid Shaft									Hollow Shaft (Shrink Disk Type)					Hollow Shaft (Key Type)				
	TU1	T1	U1	V1	W1/Depth	Key X1	Key Y1	Key Z1	Key L1	TU2	T2	U2	V2	V3	TU4	T4	U4	V4	V5
9060	440	230	210	125m6	M24/50	32	11	18	185	583	353	230	128	125	470	235	235	125	123
9065	484	234	250	140m6	M30/60	36	12	20	225	594	359	235	143	140	480	240	240	145	143
9070	509	259	250	145m6	M30/60	36	12	20	225	644	384	260	148	145	530	265	265	145	143
9075	562	262	300	160m6	M30/60	40	13	22	275	651	386	265	158	155	530	265	265	150	148
9080	582	282	300	165m6	M30/60	40	13	22	275	714	429	285	173	170	570	285	285	165	163
9085	585	285	300	175m6	M30/60	45	15	25	270	714	429	285	183	180	570	285	285	175	173

Unit: mm

Standard Shaft Arrangement Configuration

RL	RR	RB	LR	LL	LB
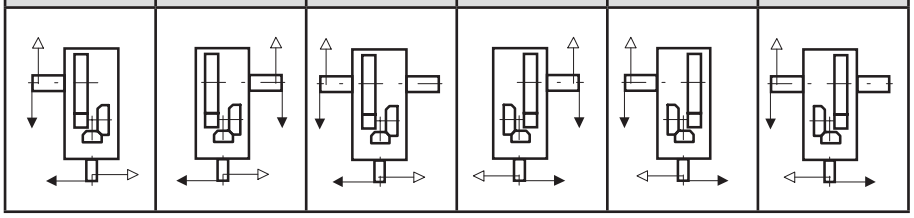					

Nomenclature

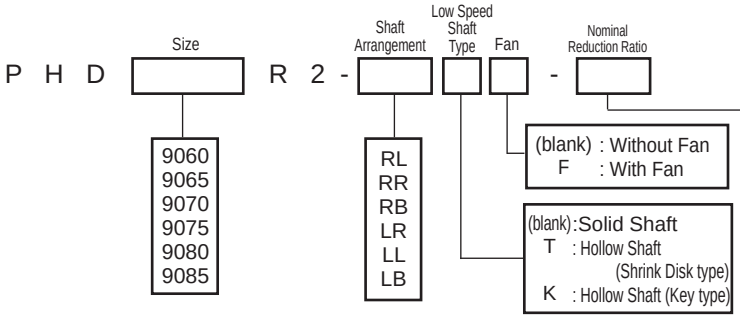

Size	Nominal Reduction Ratio 6.3	7.1	8	9	10	11.2	12.5	14	16	18	20	22.4
9060	○	○	○	○	○	○	○	○	○	○		
9065				○	○	○	○	○	○	○	○	○
9070	○	○	○	○	○	○	○	○	○	○		
9075				○	○	○	○	○	○	○	○	○
9080	○	○	○	○	○	○	○	○	○	○		
9085					○	○	○	○	○	○	○	○

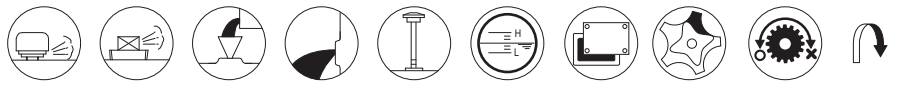

Air Breather | Air Vent | Oil Fill | Drain Plug | Dip Stick | Oil Gauge | Inspection Cover | Oil Pump | Backstop (Option) | Opposite Side

DIMENSIONS Right Angle Shaft Double Reduction Horizontal Mounting 9095, 9105, 9115

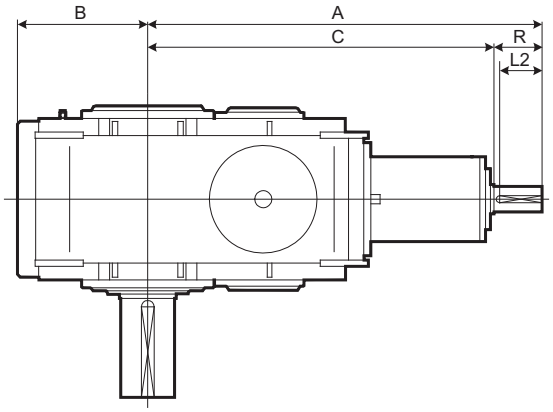

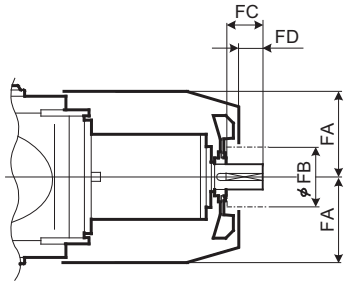

With Fan

Refer to the page C-20 for details.

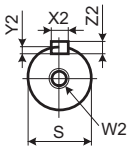

High Speed Shaft

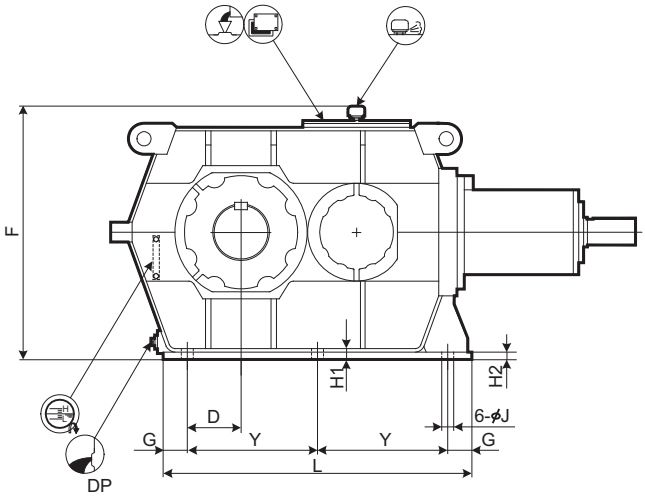

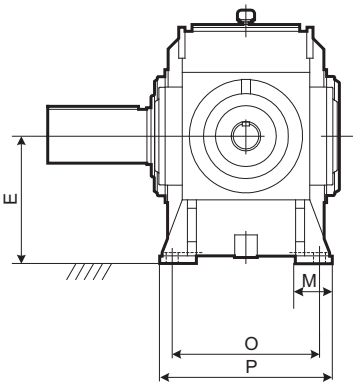

Size	A	B	C	D	E	F	G	H1	H2	J	L	M	O	P	Y
9095	1393	460	1223	190	450	895	85	39	27	42	1090	130	520	610	460
9105	1589	500	1379	210	500	995	90	39	27	42	1220	130	570	660	520
9115	1802	560	1592	240	560	1120	100	46	34	48	1390	140	630	730	595

Size	High Speed Shaft							Fan				DP	Wt. kg	Oil Qty. L
	R	S	W2/Depth	Key X2	Key Y2	Key Z2	Key L2	FA	FB	FC	FD			
9095	170	90m6	M24/50	25	9	14	150	340	250	135	90	1 1/2"	2050	100
9105	210	100m6	M24/50	28	10	16	190	380	250	175	130	1 1/2"	2800	150
9115	210	110m6	M24/50	28	10	16	190	410	250	175	130	1 1/2"	3800	200

• In case of continuous load, the forced oil lubrication is necessary. For details, consult us.

Unit: mm

1. Key and keyways are based on ISO R773-1969 Close keys (JIS B1301-1996 Parallel key in fastening type)
2. The oil quantity is approximate. Oil shall be supplied within the range shown on the oil gauge.
3. Consult us for the dimensions not shown in these drawings.
4. Refer to the page C-30 for the dimension of optional parts.

DIMENSIONS Right Angle Shaft Double Reduction Horizontal Mounting 9095, 9105, 9115

Slow Speed Shaft

Solid Shaft	Hollow Shaft (Shrink Disk Type)
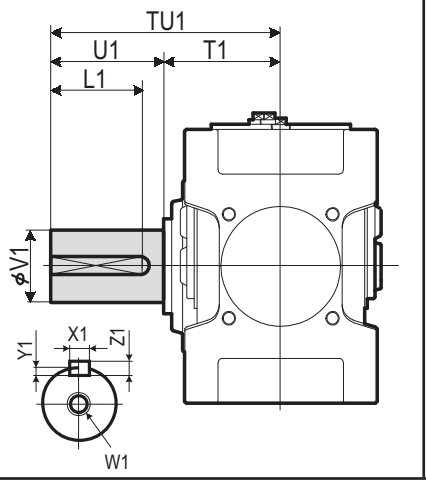	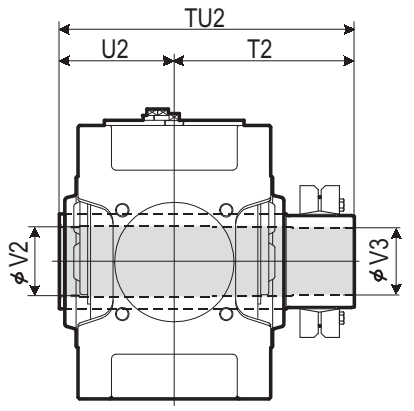 Refer to the page C-18 for details.

Size	Solid Shaft									Hollow Shaft (Shrink Disk Type)				
	TU1	T1	U1	V1	W1/Depth	Key X1	Key Y1	Key Z1	Key L1	TU2	T2	U2	V2	V3
9095	700	350	350	190m6	M30/60	45	15	25	320	859	509	350	203	200
9105	740	390	350	220m6	M30/60	50	17	28	320	949	559	390	223	220
9115	830	420	410	240m6	M30/60	56	20	32	375	1065	645	420	253	250

Unit: mm

Standard Shaft Arrangement Configuration

RL	RR	RB	LR	LL	LB
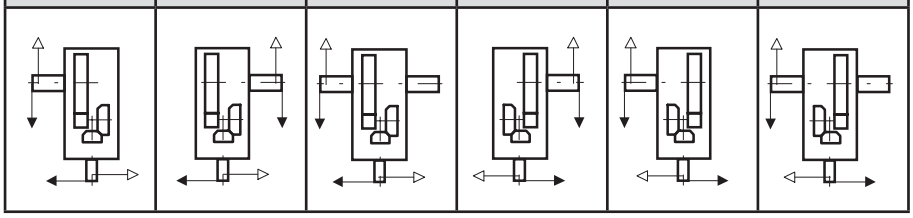					

Nomenclature

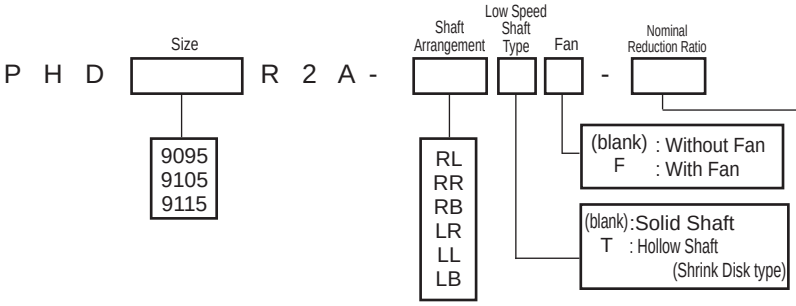

Size	Nominal Reduction Ratio 6.3	7.1	8	9	10	11.2	12.5	14	16	18	20
9090											
9095				○	○	○	○	○	○	○	○
9100											
9105				○	○	○	○	○	○	○	○
9110											
9115				○	○	○	○	○	○	○	○

Air Breather | Air Vent | Oil Fill | Drain Plug | Dip Stick | Oil Gauge | Inspection Cover | Oil Pump | Backstop (Option) | Opposite Side

DIMENSIONS Right Angle Shaft Triple Reduction Horizontal Mounting 9030 ▶ 9055

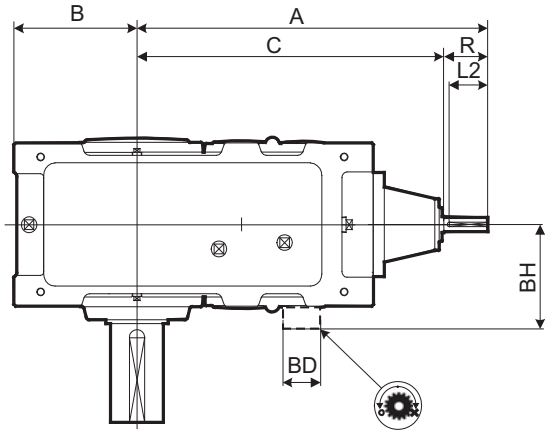

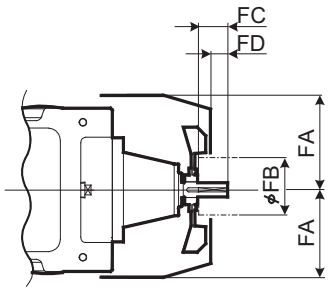

With Fan

Refer to the page C-21 for details.

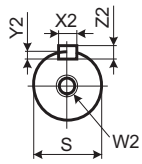

High Speed Shaft

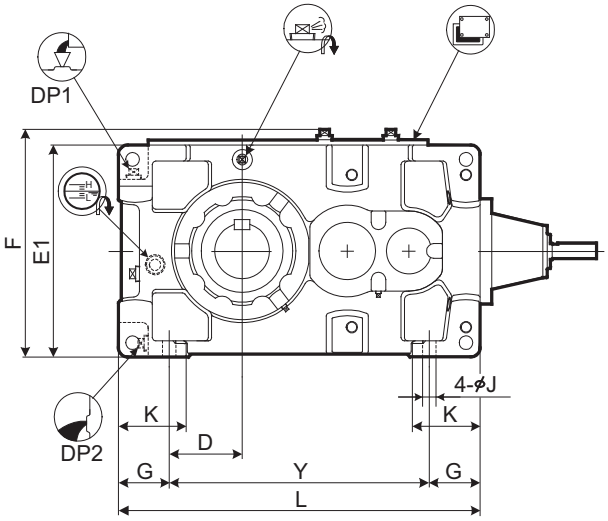

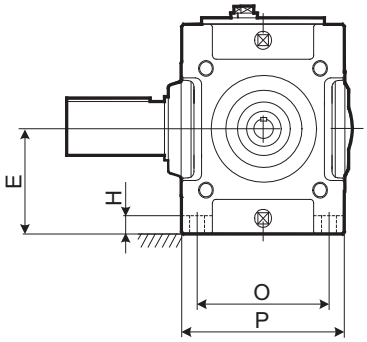

Size	A	B	C	D	E	E1	F	G	H	J	K	L	O	P	Y
9030	656	200	576	110	160	320	349	90	28	24	120	590	215	265	410
9035	687	219	607	129	185	370	399	90	28	24	120	640	215	265	460
9040	716	235	636	120	200	400	431	115	30	28	150	685	255	315	455
9045	755	256	675	141	220	440	471	115	30	28	150	745	255	315	515
9050	808	255	728	138.5	210	420	451	116.5	32	28	150	775	285	345	542
9055	847	286	767	171	245	490	521	115	32	28	150	845	285	345	615

Size	High Speed Shaft							Fan				Backstop		DP1	DP2	Wt. kg	Oil Qty. L
	R	S	W2/Depth	Key X2	Key Y2	Key Z2	L2	FA	FB	FC	FD	BD	BH				
9030	80	28k6	M10/22	8	4	7	70	150	125	50	30			3/4"	3/4"	210	10
9035	80	28k6	M10/22	8	4	7	70	150	125	50	30			3/4"	3/4"	230	12
9040	80	30k6	M10/22	8	4	7	70	170	125	50	30			1"	1"	305	16
9045	80	30k6	M10/22	8	4	7	70	170	125	50	30			1"	1"	365	18
9050	80	35k6	M12/28	10	5	8	70	190	140	50	22	150	263	1"	1"	445	21
9055	80	35k6	M12/28	10	5	8	70	190	140	50	22	150	263	1"	1"	505	28

Unit: mm

1. Key and keyways are based on ISO R773-1969 Close keys (JIS B1301-1996 Parallel key in fastening type)
2. The oil quantity is approximate. Oil shall be supplied within the range shown on the oil gauge.
3. Refer to the page C-12 for dimensions shown in these drawings.
4. Refer to the page C-24 for the dimension of optional parts.

DIMENSIONS Right Angle Shaft Triple Reduction Horizontal Mounting 9030 ▶ 9055

Slow Speed Shaft

Solid Shaft	Hollow Shaft (Shrink Disk Type)	Hollow Shaft (Key Type)
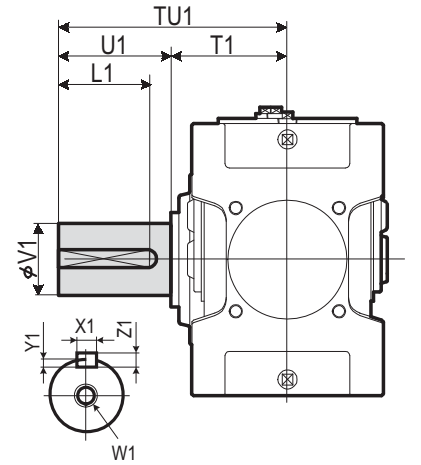	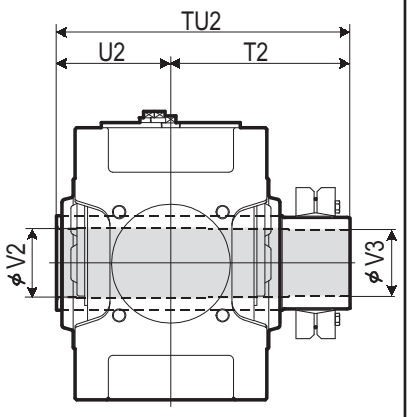 Refer to the page C-18 for details.	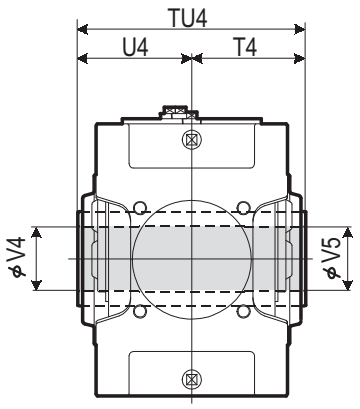 Refer to the page C-18 for details.

Size	Solid Shaft									Hollow Shaft (Shrink Disk Type)					Hollow Shaft (Key Type)				
	TU1	T1	U1	V1	W1/Depth	Key X1	Key Y1	Key Z1	Key L1	TU2	T2	U2	V2	V3	TU4	T4	U4	V4	V5
9030	330	160	170	80m6	M20/42	22	9	14	150	393	233	160	83	80	330	165	165	75	75
9035	330	160	170	90m6	M20/42	25	9	14	150	403	243	160	88	85	330	165	165	85	85
9040	349	179	170	95m6	M24/50	25	9	14	150	448	268	180	98	95	360	180	180	90	90
9045	391	181	210	105m6	M24/50	28	10	16	190	463	283	180	108	105	370	185	185	105	105
9050	411	201	210	110m6	M24/50	28	10	16	190	503	303	200	108	105	410	205	205	105	105
9055	411	201	210	120m6	M24/50	32	11	18	185	528	323	205	123	120	410	205	205	115	115

Unit: mm

Standard Shaft Arrangement Configuration

RL	RR	RB	LR	LL	LB
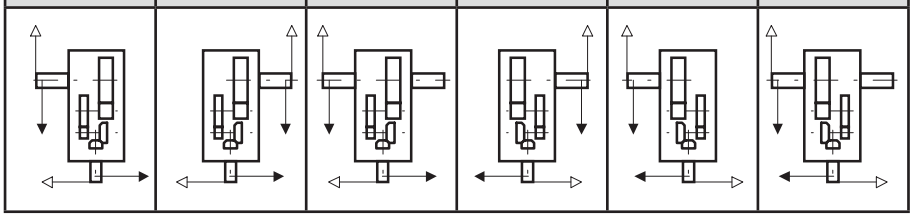					

Nomenclature

P H A [ ] R 3 - [ ] [ ] [ ] - [ ]

Size: 9030, 9035, 9040, 9045, 9050, 9055

Shaft Arrangement: RL, RR, RB, LR, LL, LB

Low Speed Shaft Type:
- (blank): Solid Shaft
- T : Hollow Shaft (Shrink Disk type)
- K : Hollow Shaft (Key type)

Option:
- (blank) : Without Fan
- F : With Fan
- B : With Backstop
- FB : With Fan & Backstop

Nominal Reduction Ratio

Size	20	22.4	25	28	31.5	35.5	40	45	50	56	63	71	80	90
9030	○	○	○	○	○	○	○	○	○	○	○	○		
9035			○	○	○	○	○	○	○	○		○	○	○
9040	○	○	○	○	○	○	○	○		○	○	○		
9045				○	○	○	○	○	○	○		○	○	○
9050	○	○	○	○	○	○	○	○	○	○	○	○		
9055			○	○	○	○	○	○	○	○	○	○	○	○

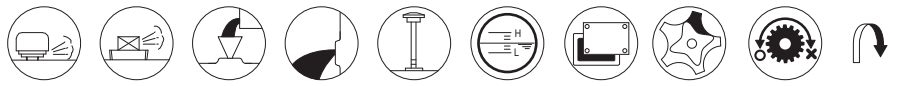

Air Breather, Air Vent, Oil Fill, Drain Plug, Dip Stick, Oil Gauge, Inspection Cover, Oil Pump, Backstop (Option), Opposite Side

DIMENSIONS Right Angle Shaft Triple Reduction Horizontal Mounting 9060 ▶ 9085

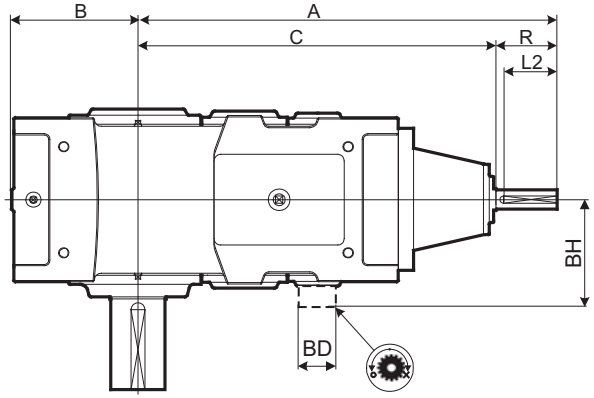

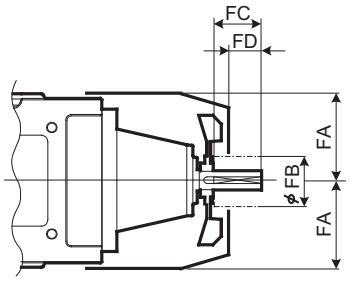

With Fan

Refer to the page C-21 for details.

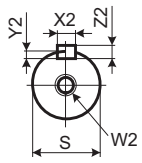

High Speed Shaft

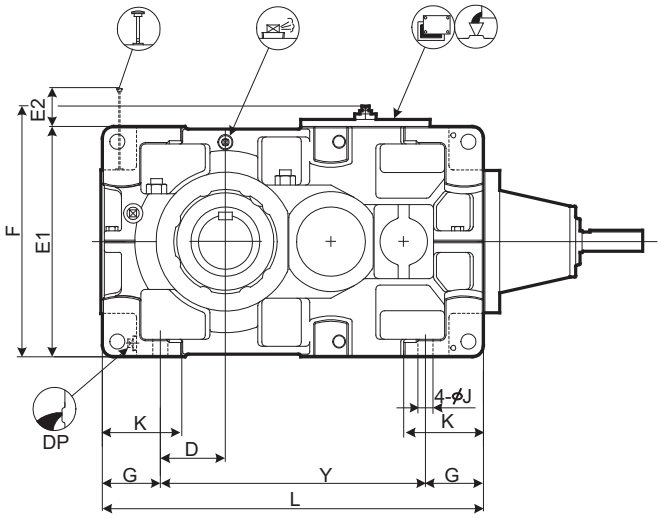

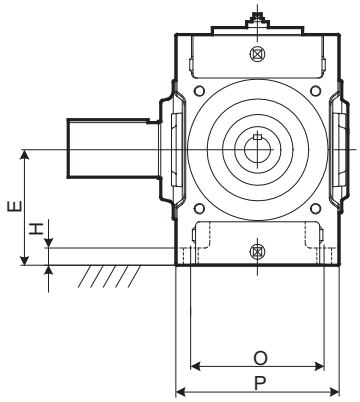

Size	A	B	C	D	E	E1	E2	F	G	H	J	K	L	O	P	Y
9060	939	299	829	151	265	530	158	578	135	35	35	180	885	310	380	615
9065	985	338	875	190	300	600	123	648	135	35	35	180	970	310	380	700
9070	1027	336	917	163	300	600	183	648	160	40	42	215	1020	350	430	700
9075	1080	383	970	210	335	670	148	718	160	52	42	220	1120	350	430	800
9080	1176	378	1036	205	335	670	208	718	160	52	42	220	1155	380	460	835
9085	1232	422	1092	249	375	750	168	798	160	52	42	220	1255	380	460	935

Size	High Speed Shaft							Fan				Backstop		DP	Wt. kg	Oil Qty. L
	R	S	W2/Depth	Key				FA	FB	FC	FD	BD	BH			
				X2	Y2	Z2	L2									
9060	110	45k6	M16/36	14	5.5	9	95	220	160	80	52	175	308	1"	660	29
9065	110	45k6	M16/36	14	5.5	9	95	220	160	80	52	175	308	1"	785	33
9070	110	50k6	M16/36	14	5.5	9	95	245	160	80	52	190	330	1"	940	45
9075	110	50k6	M16/36	14	5.5	9	95	245	160	80	52	190	330	1"	1190	52
9080	140	60m6	M20/42	18	7	11	125	270	160	105	65	210	365	1"	1350	60
9085	140	60m6	M20/42	18	7	11	125	270	160	105	65	210	365	1"	1610	75

Unit: mm

1. Key and keyways are based on ISO R773-1969 Close keys (JIS B1301-1996 Parallel key in fastening type)
2. The oil quantity is approximate. Oil shall be supplied within the range shown on the oil gauge.
3. Refer to the page C-14 for dimensions not shown in these drawings.
4. Refer to the page C-27 for the dimension of optional parts.

DIMENSIONS Right Angle Shaft Triple Reduction Horizontal Mounting 9060 ▶ 9085

Slow Speed Shaft

Solid Shaft	Hollow Shaft (Shrink Disk Type)	Hollow Shaft (Key Type)
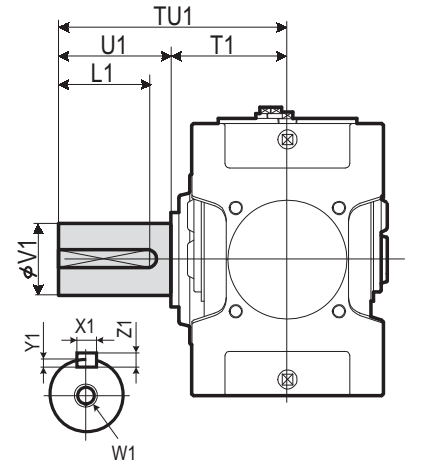	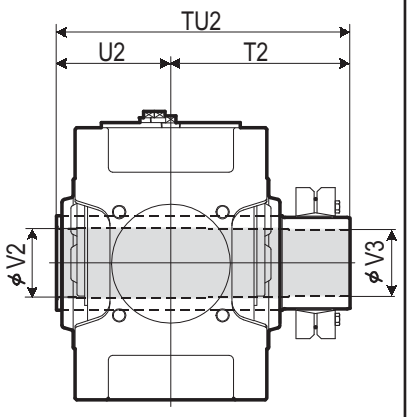 Refer to the page C-18 for details.	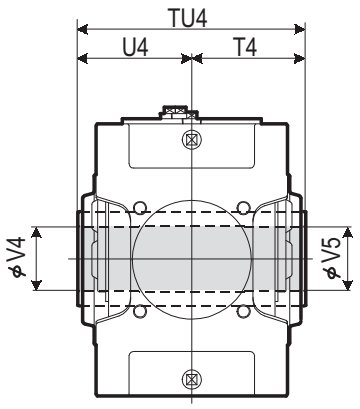 Refer to the page C-18 for details.

Size	Solid Shaft									Hollow Shaft (Shrink Disk Type)					Hollow Shaft (Key Type)				
	TU1	T1	U1	V1	W1/Depth	Key X1	Key Y1	Key Z1	Key L1	TU2	T2	U2	V2	V3	TU4	T4	U4	V4	V5
9060	440	230	210	125m6	M24/50	32	11	18	185	583	353	230	128	125	470	235	235	125	123
9065	484	234	250	140m6	M30/60	36	12	20	225	594	359	235	143	140	480	240	240	145	143
9070	509	259	250	145m6	M30/60	36	12	20	225	644	384	260	148	145	530	265	265	145	143
9075	562	262	300	160m6	M30/60	40	13	22	275	651	386	265	158	155	530	265	265	150	148
9080	582	282	300	165m6	M30/60	40	13	22	275	714	429	285	173	170	570	285	285	165	163
9085	585	285	300	175m6	M30/60	45	15	25	270	714	429	285	183	180	570	285	285	175	173

Unit: mm

Standard Shaft Arrangement Configuration

RL	RR	RB	LR	LL	LB
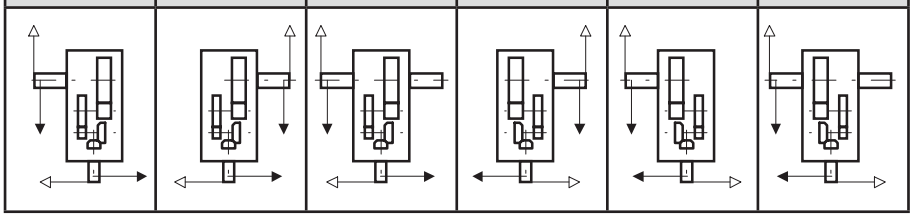					

Nomenclature

P H D [Size] R 3 - [Shaft Arrangement] [Low Speed Shaft Type] [Option] - [Nominal Reduction Ratio]

Size: 9060, 9065, 9070, 9075, 9080, 9085

Shaft Arrangement: RL, RR, RB, LR, LL, LB

Option:
- (blank) : Without Fan
- F : With Fan
- B : With Backstop
- FB : With Fan & Backstop

Low Speed Shaft Type:
- (blank) : Solid Shaft
- T : Hollow Shaft (Shrink Disk type)
- K : Hollow Shaft (Key type)

Size	Nominal Reduction Ratio 20	22.4	25	28	31.5	35.5	40	45	50	56	63	71	80	90
9060	○	○	○	○	○	○	○	○	○	○	○	○		
9065				○	○	○	○	○	○	○	○	○	○	○
9070	○	○	○	○	○	○	○	○	○	○	○	○		
9075				○	○	○	○	○	○	○	○	○	○	○
9080	○	○	○	○	○	○	○	○	○	○	○	○		
9085			○	○	○	○	○	○	○	○	○	○	○	○

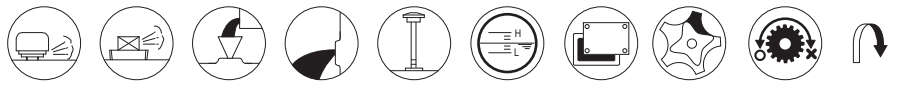

Air Breather | Air Vent | Oil Fill | Drain Plug | Dip Stick | Oil Gauge | Inspection Cover | Oil Pump | Backstop (Option) | Opposite Side

DIMENSIONS Right Angle Shaft Triple Reduction Horizontal Mounting 9090 ▶ 9115

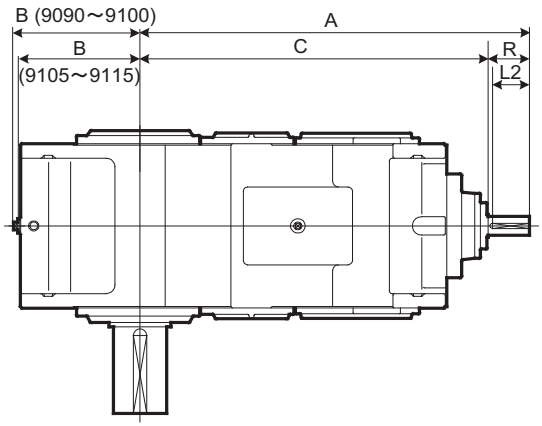

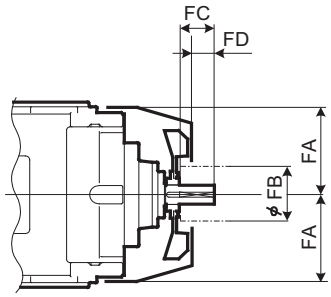

With Fan

Refer to the page C-21 for details.

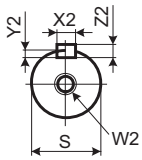

High Speed Shaft

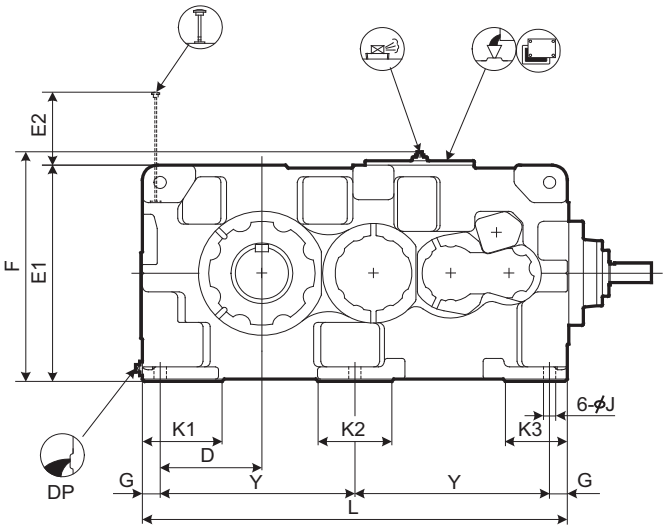

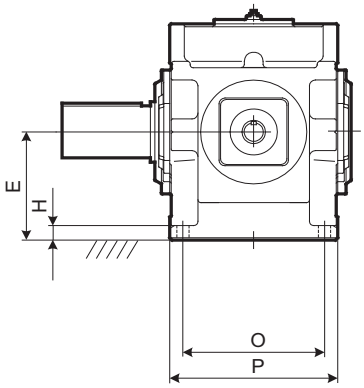

Size	A	B	C	D	E	E1	E2	F	G	H	J	K1	K2	K3	L	O	P	Y
9090	1320	428	1180	345	375	750	253	797	60	50	42	270	250	210	1440	480	570	660
9095	1350	458	1210	375	400	800	258	847	60	50	42	290	250	210	1500	480	570	690
9100	1474	468	1334	375	425	850	282	897	70	55	48	300	280	240	1610	560	650	735
9105	1508	493	1368	410	450	900	287	947	70	55	48	320	280	240	1680	560	650	770
9110	1684	508	1514	420	475	950	303	997	75	60	56	340	310	260	1810	610	710	830
9115	1733	558	1563	470	500	1000	302	1047	75	60	56	350	310	260	1910	610	710	880

Size	High Speed Shaft							Fan				DP	Wt. kg	Oil Qty. L
	R	S	W2/Depth	Key X2	Key Y2	Key Z2	L2	FA	FB	FC	FD			
9090	140	65m6	M20/42	18	7	11	125	340	200	105	65	1 1/2"	2150	120
9095	140	65m6	M20/42	18	7	11	125	340	200	105	65	1 1/2"	2400	155
9100	140	75m6	M20/42	20	7.5	12	125	380	225	105	60	1 1/2"	2880	180
9105	140	75m6	M20/42	20	7.5	12	125	380	225	105	60	1 1/2"	3440	220
9110	170	85m6	M20/42	22	9	14	150	410	225	135	90	1 1/2"	4160	250
9115	170	85m6	M20/42	22	9	14	150	410	225	135	90	1 1/2"	4610	310

Unit: mm

1. Key and keyways are based on ISO R773-1969 Close keys (JIS B1301-1996 Parallel key in fastening type)
2. The oil quantity is approximate. Oil shall be supplied within the range shown on the oil gauge.
3. Refer to the page C-16 for dimensions shown in these drawings.
4. Refer to the page C-30 for the dimension of optional parts.

DIMENSIONS Right Angle Shaft Triple Reduction Horizontal Mounting 9090 ▶ 9115

Slow Speed Shaft

Solid Shaft	Hollow Shaft (Shrink Disk Type)
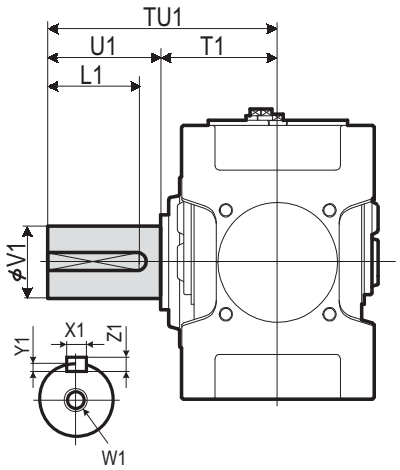	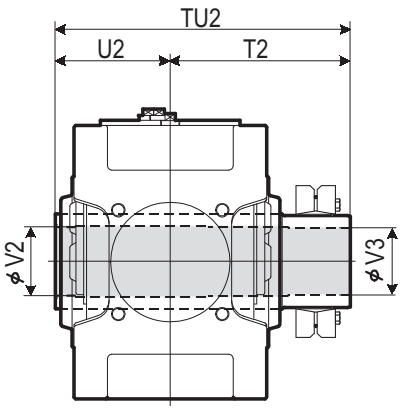 Refer to the page C-18 for details.

Size	Solid Shaft									Hollow Shaft (Shrink Disk Type)				
	TU1	T1	U1	V1	W1/Depth	Key X1	Key Y1	Key Z1	Key L1	TU2	T2	U2	V2	V3
9090	650	350	300	180m6	M30/60	45	15	25	270	844	494	350	193	190
9095	700	350	350	190m6	M30/60	45	15	25	320	859	509	350	203	200
9100	740	390	350	200m6	M30/60	45	15	25	320	934	544	390	213	210
9105	740	390	350	220m6	M30/60	50	17	28	320	949	559	390	223	220
9110	770	420	350	220m6	M30/60	50	17	28	320	1030	610	420	243	240
9115	830	420	410	240m6	M30/60	56	20	32	375	1065	645	420	253	250

Unit: mm

Standard Shaft Arrangement Configuration

RL	RR	RB	LR	LL	LB
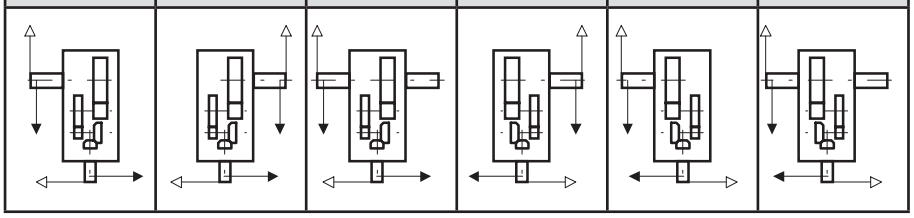					

Nomenclature

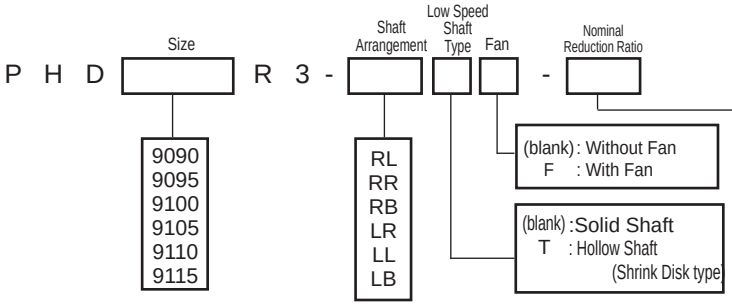

Size	Nominal Reduction Ratio 20	22.4	25	28	31.5	35.5	40	45	50	56	63	71	80	90
9090	○	○	○	○	○	○	○	○	○	○	○	○	○	
9095		○	○	○	○	○	○	○	○	○	○	○	○	○
9100	○	○	○	○	○	○	○	○	○	○	○	○	○	
9105		○	○	○	○	○	○	○	○	○	○	○	○	○
9110	○	○	○	○	○	○	○	○	○	○	○	○	○	
9115		○	○	○	○	○	○	○	○	○	○	○	○	○

Air Breather | Air Vent | Oil Fill | Drain Plug | Dip Stick | Oil Gauge | Inspection Cover | Oil Pump | Backstop (Option) | Opposite Side

DIMENSIONS Right Angle Shaft Triple Reduction Horizontal Mounting 9118 ▶ 9126

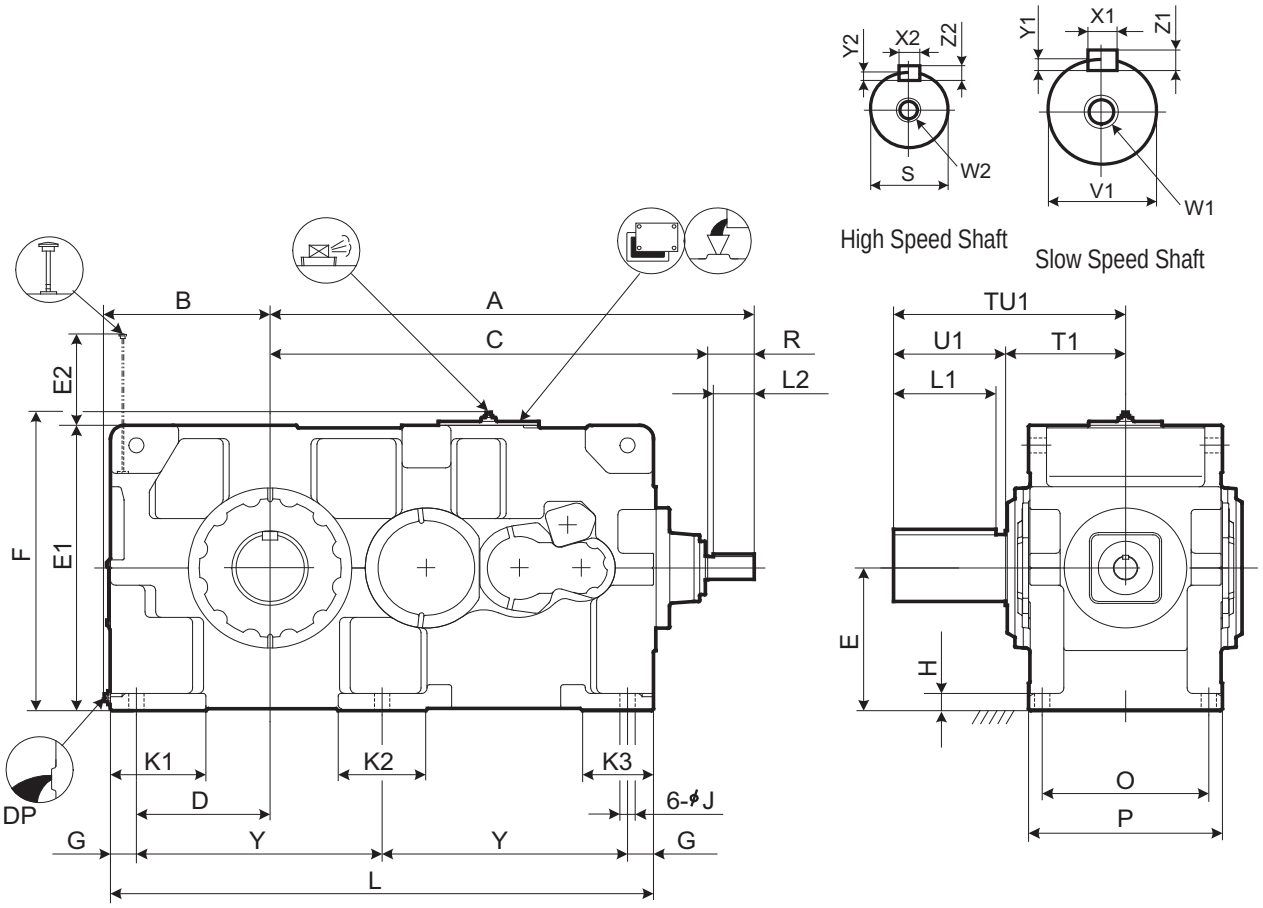

Size	Ratio	A	B	C	D	E	E1	E2	F	G	H	J	K1	K2	K3	L	O	P	Y
9118	ALL	1774	608	1604	490	535	1070	343	1117	95	65	56	350	320	260	1990	610	710	900
9121	≦ 31.5	2053	663	1843	545	580	1160	357	1207	95	70	56	390	300	270	2180	680	780	995
	≧ 35.5	2013	663	1843	545	580	1160	357	1207	95	70	56	390	300	270	2180	680	780	995
9126	≦ 31.5	2053	663	1843	545	580	1160	357	1207	95	70	56	390	300	270	2180	680	780	995
	≧ 35.5	2013	663	1843	545	580	1160	357	1207	95	70	56	390	300	270	2180	680	780	995

Size	Ratio	High Speed Shaft							DP	Wt. kg	Oil Qty. L
		R	S	W2/Depth	Key						
					X2	Y2	Z2	L2			
9118	ALL	170	85m6	M20/42	22	9	14	150	1 1/2"	5200	350
9121	≦ 31.5	210	110m6	M24/50	28	10	16	190	1 1/2"	6200	460
	≧ 35.5	170	90m6	M24/50	25	9	14	150	1 1/2"	6200	460
9126	≦ 31.5	210	110m6	M24/50	28	10	16	190	1 1/2"	6550	460
	≧ 35.5	170	90m6	M24/50	25	9	14	150	1 1/2"	6550	460

Size	Ratio	Slow Speed Shaft (Solid)								
		TU1	T1	U1	V1	W1/Depth	Key			
							X1	Y1	Z1	L1
9118	ALL	850	440	410	260m6	M36/70	56	20	32	375
9121	≦ 31.5	935	465	470	280m6	M36/70	63	20	32	425
	≧ 35.5	935	465	470	280m6	M36/70	63	20	32	425
9126	≦ 31.5	935	465	470	300m6	M36/70	70	22	36	425
	≧ 35.5	935	465	470	300m6	M36/70	70	22	36	425

Unit: mm

1. Key and keyways are based on ISO R773-1969 Close keys (JIS B1301-1996 Parallel key in fastening type)
2. The oil quantity is approximate. Oil shall be supplied within the range shown on the oil gauge.
3. Consult us for the dimensions not shown in these drawings.

DIMENSIONS Right Angle Shaft Triple Reduction Horizontal Mounting 9118 ▶ 9126

Standard Shaft Arrangement Configuration

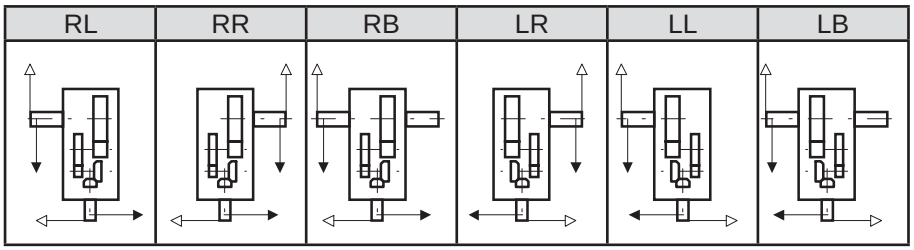

Nomenclature

P H D [Size] R 3 - [Shaft Arrangement] [Fan] - [Nominal Reduction Ratio]

Size: 9118, 9121, 9126

Shaft Arrangement: RL, RR, RB, LR, LL, LB

Fan: (blank) :Without Fan; F : With Fan

Size	Nominal Reduction Ratio											
	25	28	31.5	35.5	40	45	50	56	63	71	80	90
9118	○		○	○	○	○	○	○	○	○	○	○
9121		○	○	○	○	○	○	○	○	○	○	
9126		○	○	○	○	○	○	○	○	○	○	

DIMENSIONS Right Angle Shaft Triple Reduction Horizontal Mounting 9128 ▶ 9136

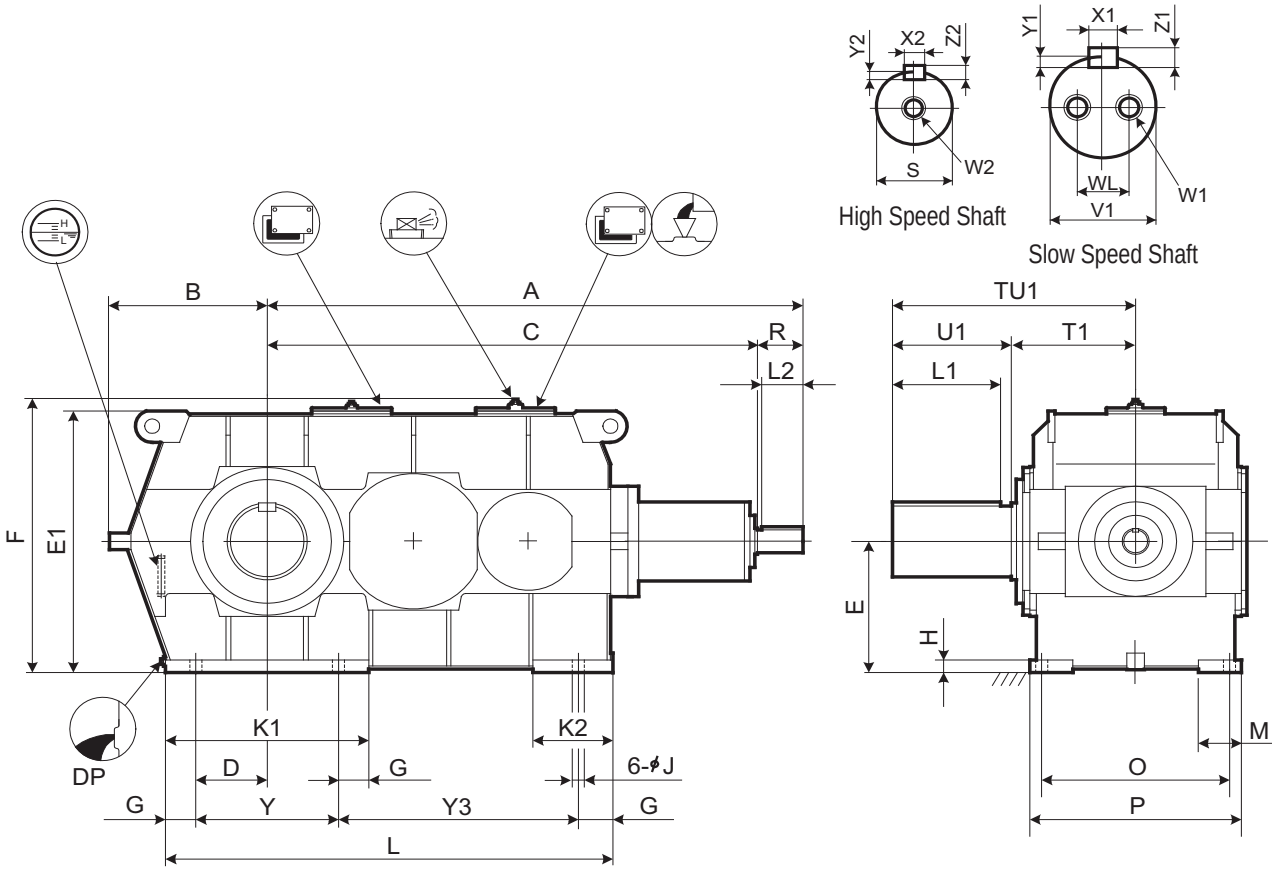

Note : Cast iron housing is available.
Consult us when the dimension is required.

Size	A	B	C	D	E	E1	F	G	H	J	K1	K2	L	M	O	P	Y	Y3
9128	2244	680	2034	330	600	1194	1241	140	55	66	940	280	1930	170	710	840	660	990
9131	2479	730	2269	330	630	1256	1303	140	60	66	940	280	2070	200	850	980	660	1130
9136	2479	730	2269	330	630	1256	1303	140	60	66	940	280	2070	200	850	980	660	1130

Size	High Speed Shaft							DP	Wt. kg	Oil Qty. L
	R	S	W2/Depth	Key						
				X2	Y2	Z2	L2			
9128	210	100m6	M24/50	28	10	16	190	1 1/2"	7400	350
9131	210	110m6	M24/50	28	10	16	190	1 1/2"	9850	510
9136	210	110m6	M24/50	28	10	16	190	1 1/2"	10200	500

Size	Solid Shaft									
	TU1	T1	U1	V1	W1/Depth	WL	Key			
							X1	Y1	Z1	L1
9128	950	480	470	320m6	M36/70	200	70	22	36	425
9131	1100	550	550	340m6	M36/70	215	80	25	40	500
9136	1110	560	550	360m6	M36/70	230	80	25	40	500

Unit: mm

1. Key and keyways are based on ISO R773-1969 Close keys (JIS B1301-1996 Parallel key in fastening type)
2. The oil quantity is approximate. Oil shall be supplied within the range shown on the oil gauge.
3. Consult us for the dimensions not shown in these drawings.

DIMENSIONS Right Angle Shaft Triple Reduction Horizontal Mounting 9128 ▶ 9136

Standard Shaft Arrangement Configuration

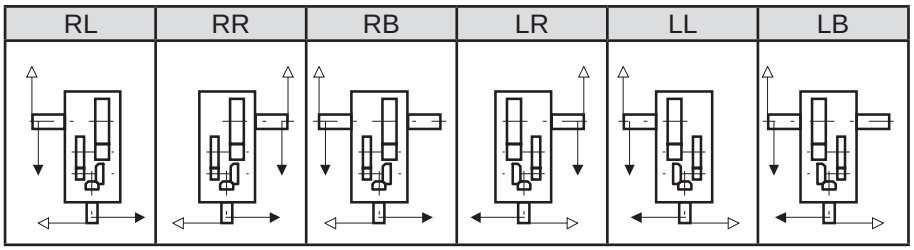

Nomenclature

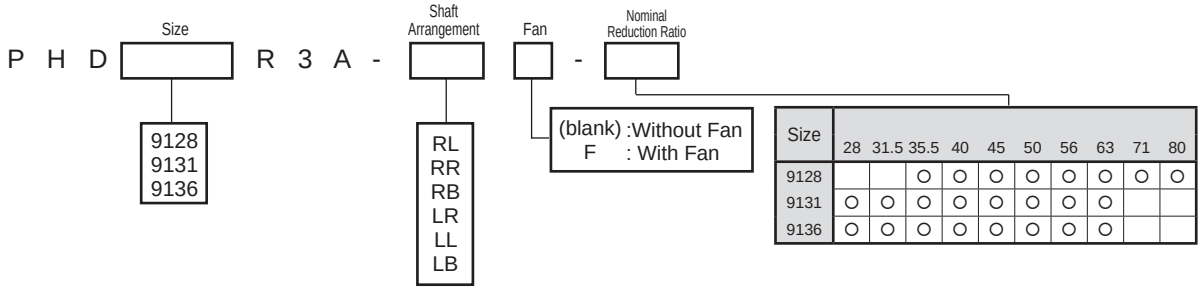

Size	28	31.5	35.5	40	45	50	56	63	71	80
9128			○	○	○	○	○	○	○	○
9131	○	○	○	○	○	○	○	○		
9136	○	○	○	○	○	○	○	○		

DIMENSIONS Right Angle Shaft Quadruple Reduction Horizontal Mounting 9040 ▶ 9055

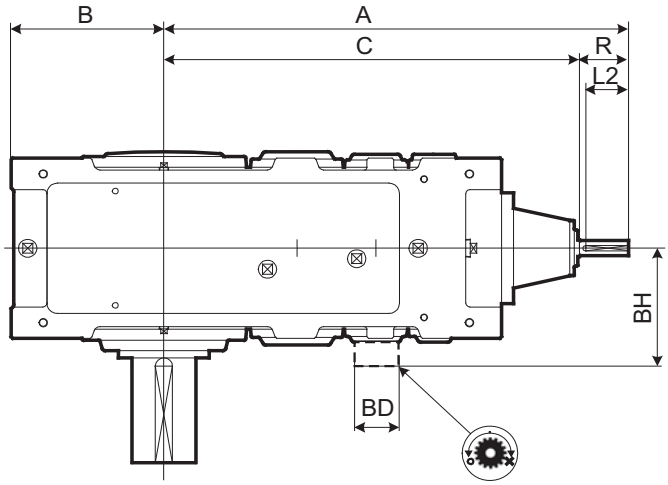

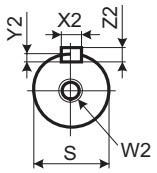

High Speed Shaft

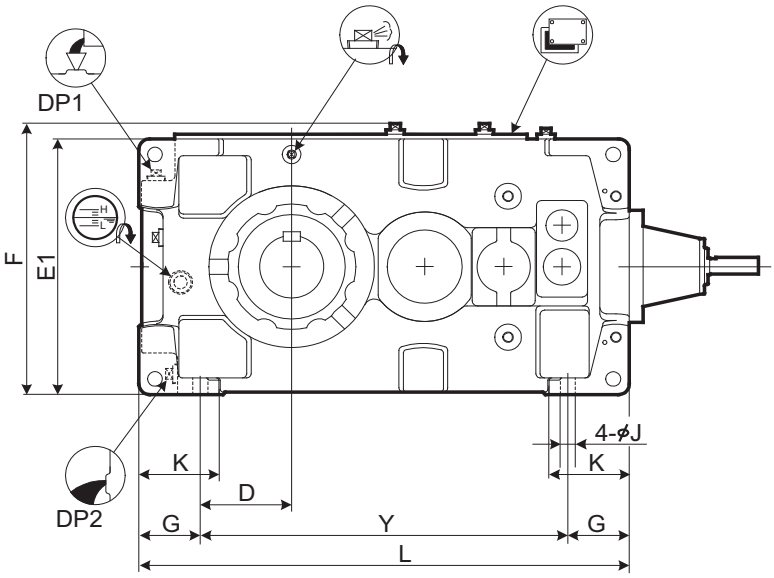

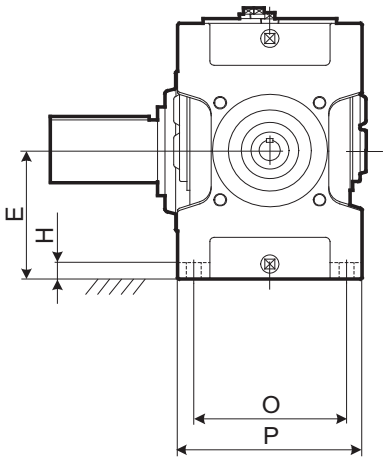

Size	A	B	C	D	E	E1	F	G	H	J	K	L	O	P	Y
9040	790	235	710	120	200	400	431	115	30	28	150	759	255	315	529
9045	829	256	749	141	220	440	471	115	30	28	150	819	255	315	589
9050	859	255	779	138.5	210	420	451	116.5	32	28	150	848	285	345	615
9055	898	286	818	171	245	490	521	115	32	28	150	918	285	345	688

Size	High Speed Shaft							Backstop		DP1	DP2	Wt. kg	Oil Qty. L
	R	S	W2/Depth	Key X2	Key Y2	Key Z2	Key L2	BD	BH				
9040	80	28k6	M10/22	8	4	7	70			1"	1"	325	19
9045	80	28k6	M10/22	8	4	7	70			1"	1"	395	21
9050	80	28k6	M10/22	8	4	7	70	150	263	1"	1"	460	24
9055	80	28k6	M10/22	8	4	7	70	150	263	1"	1"	520	29

Unit: mm

1. Key and keyways are based on ISO R773-1969 Close keys (JIS B1301-1996 Parallel key in fastening type)
2. The oil quantity is approximate. Oil shall be supplied within the range shown on the oil gauge.
3. Refer to the page C-13 for dimensions shown in these drawings.
4. Refer to the page C-24 for the dimension of optional parts.

DIMENSIONS Right Angle Shaft Quadruple Reduction Horizontal Mounting 9040 ▶ 9055

Slow Speed Shaft

Solid Shaft	Hollow Shaft (Shrink Disk Type)	Hollow Shaft (Key Type)
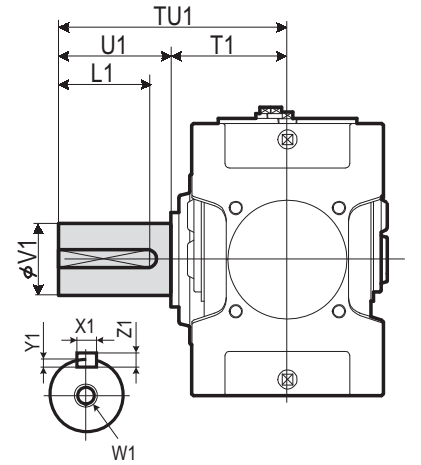	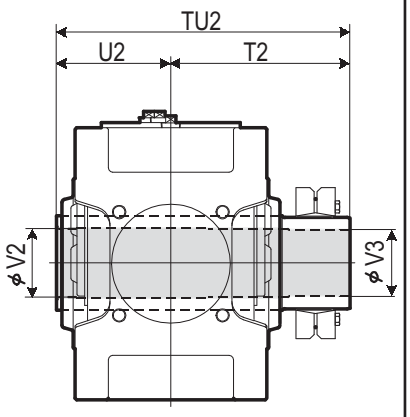 Refer to the page C-18 for details.	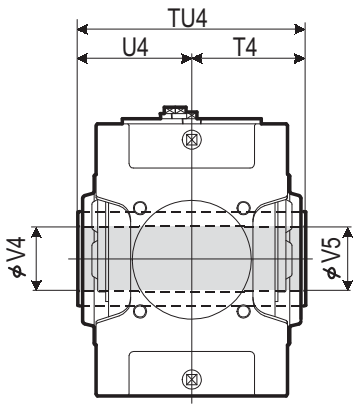 Refer to the page C-18 for details.

Size	Solid Shaft									Hollow Shaft (Shrink Disk Type)					Hollow Shaft (Key Type)				
	TU1	T1	U1	V1	W1/Depth	Key X1	Key Y1	Key Z1	Key L1	TU2	T2	U2	V2	V3	TU4	T4	U4	V4	V5
9040	349	179	170	95m6	M24/50	25	9	14	150	448	268	180	98	95	360	180	180	90	90
9045	391	181	210	105m6	M24/50	28	10	16	190	463	283	180	108	105	370	185	185	105	105
9050	411	201	210	110m6	M24/50	28	10	16	190	503	303	200	108	105	410	205	205	105	105
9055	411	201	210	120m6	M24/50	32	11	18	185	528	323	205	123	120	410	205	205	115	115

Unit: mm

Standard Shaft Arrangement Configuration

RL	RR	RB	LR	LL	LB
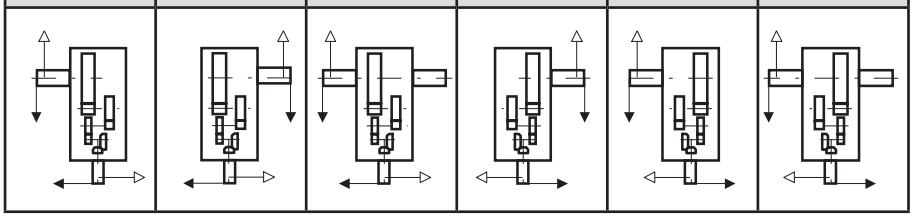					

Nomenclature

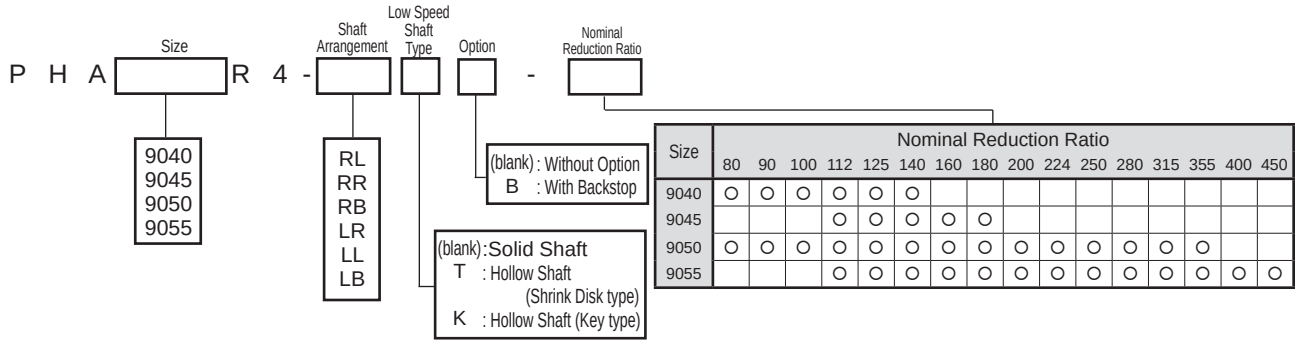

Size	Nominal Reduction Ratio 80	90	100	112	125	140	160	180	200	224	250	280	315	355	400	450
9040	○	○	○	○	○	○										
9045				○	○	○	○	○								
9050	○	○	○	○	○	○	○	○	○	○	○	○	○	○		
9055				○	○	○	○	○	○	○	○	○	○	○	○	○

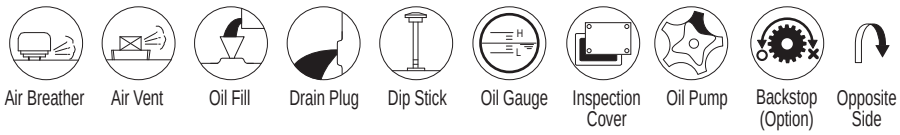

DIMENSIONS Right Angle Shaft Quadruple Reduction Horizontal Mounting 9060 ▶ 9085

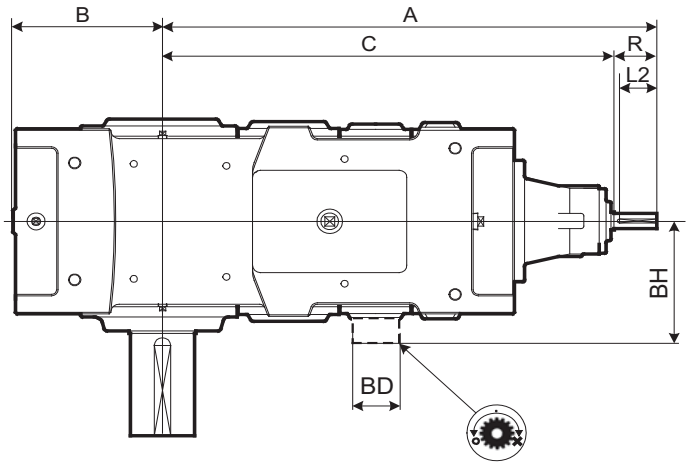

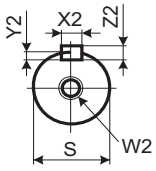

High Speed Shaft

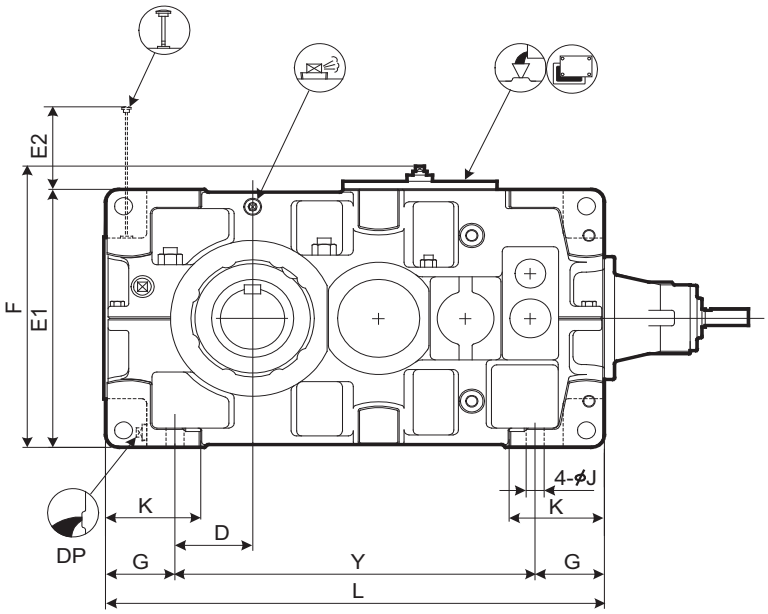

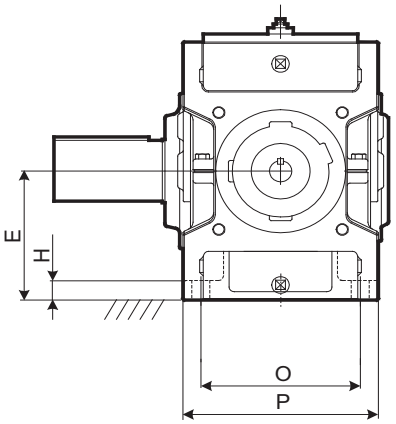

Size	A	B	C	D	E	E1	E2	F	G	H	J	K	L	O	P	Y
9060	950	299	870	151	265	530	121	578	135	35	35	180	970	310	380	700
9065	996	338	916	190	300	600	86	648	135	35	35	180	1055	310	380	785
9070	1080	336	1000	163	300	600	140	648	160	40	42	215	1115	350	430	795
9075	1133	383	1053	210	335	670	105	718	160	52	42	220	1215	350	430	895
9080	1250	378	1140	205	335	670	162	718	160	52	42	220	1275	380	460	955
9085	1306	422	1196	249	375	750	122	798	160	52	42	220	1375	380	460	1055

Size	High Speed Shaft							Backstop		DP	Wt. kg	Oil Qty. L
	R	S	W2/Depth	Key				BD	BH			
				X2	Y2	Z2	L2					
9060	80	30k6	M10/22	8	4	7	70	175	308	1"	670	38
9065	80	30k6	M10/22	8	4	7	70	175	308	1"	825	43
9070	80	35k6	M12/28	10	5	8	70	190	330	1"	960	57
9075	80	35k6	M12/28	10	5	8	70	190	330	1"	1180	67
9080	110	45k6	M16/36	14	5.5	9	95	210	365	1"	1390	73
9085	110	45k6	M16/36	14	5.5	9	95	210	365	1"	1650	90

Unit: mm

1. Key and keyways are based on ISO R773-1969 Close keys (JIS B1301-1996 Parallel key in fastening type)
2. The oil quantity is approximate. Oil shall be supplied within the range shown on the oil gauge.
3. Refer to the page C-15 for dimensions shown in these drawings.
4. Refer to the page C-27 for the dimension of optional parts.

DIMENSIONS Right Angle Shaft Quadruple Reduction Horizontal Mounting 9060 ▶ 9085

Slow Speed Shaft

Solid Shaft	Hollow Shaft (Shrink Disk Type)	Hollow Shaft (Key Type)
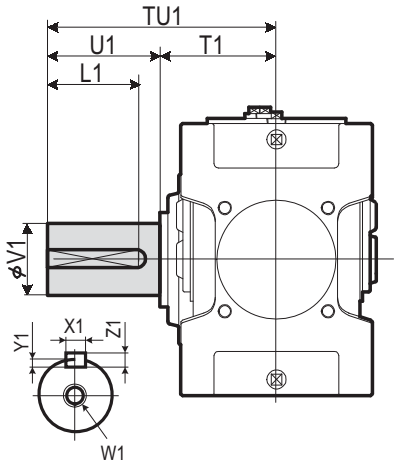	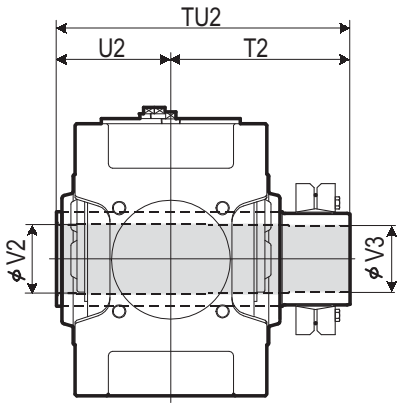 Refer to the page C-18 for details.	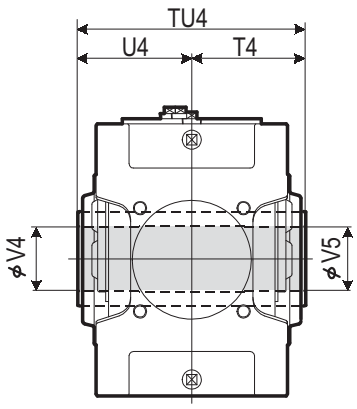 Refer to the page C-18 for details.

Size	Solid Shaft									Hollow Shaft (Shrink Disk Type)					Hollow Shaft (Key Type)				
	TU1	T1	U1	V1	W1/Depth	Key X1	Key Y1	Key Z1	Key L1	TU2	T2	U2	V2	V3	TU4	T4	U4	V4	V5
9060	440	230	210	125m6	M24/50	32	11	18	185	583	353	230	128	125	470	235	235	125	123
9065	484	234	250	140m6	M30/60	36	12	20	225	594	359	235	143	140	480	240	240	145	143
9070	509	259	250	145m6	M30/60	36	12	20	225	644	384	260	148	145	530	265	265	145	143
9075	562	262	300	160m6	M30/60	40	13	22	275	651	386	265	158	155	530	265	265	150	148
9080	582	282	300	165m6	M30/60	40	13	22	275	714	429	285	173	170	570	285	285	165	163
9085	585	285	300	175m6	M30/60	45	15	25	270	714	429	285	183	180	570	285	285	175	173

Unit: mm

Standard Shaft Arrangement Configuration

RL	RR	RB	LR	LL	LB
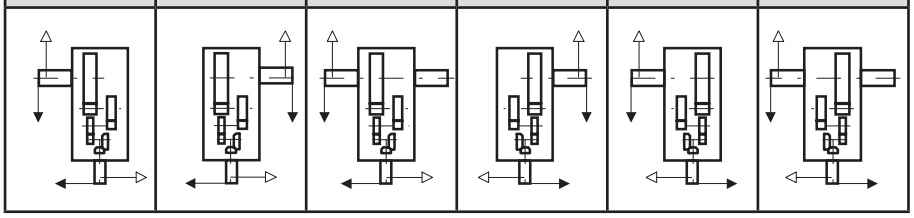					

Nomenclature

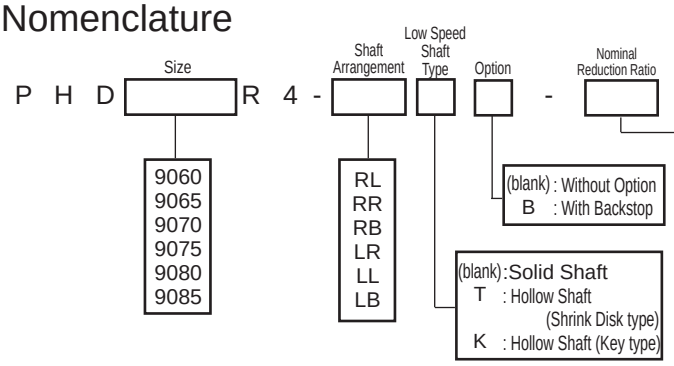

Size	Nominal Reduction Ratio 80	90	100	112	125	140	160	180	200	224	250	280	315	355	400	450
9060		○	○	○	○	○	○	○	○	○	○	○	○	○		
9065				○	○	○	○	○	○	○	○	○	○	○	○	○
9070	○	○	○	○	○	○		○	○	○	○	○	○	○		
9075			○	○	○	○	○	○		○	○	○	○	○	○	○
9080	○	○	○	○	○	○	○	○	○	○	○	○	○	○		
9085			○	○	○	○	○	○	○	○	○	○	○	○	○	○

Air Breather · Air Vent · Oil Fill · Drain Plug · Dip Stick · Oil Gauge · Inspection Cover · Oil Pump · Backstop (Option) · Opposite Side

DIMENSIONS Right Angle Shaft Quadruple Reduction Horizontal Mounting 9090 ▶ 9115

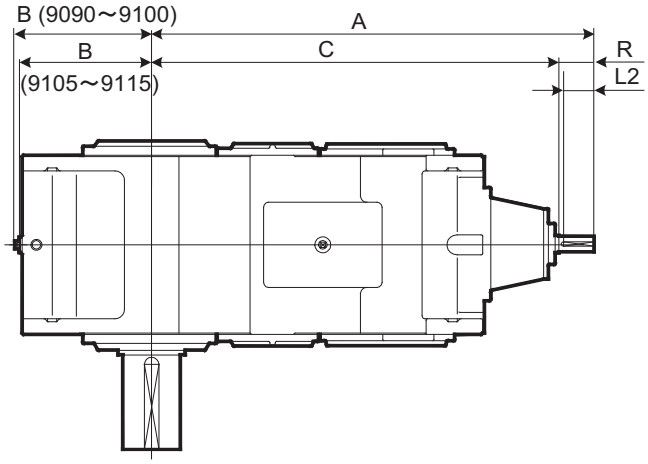

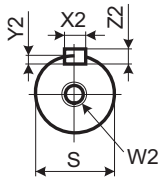

High Speed Shaft

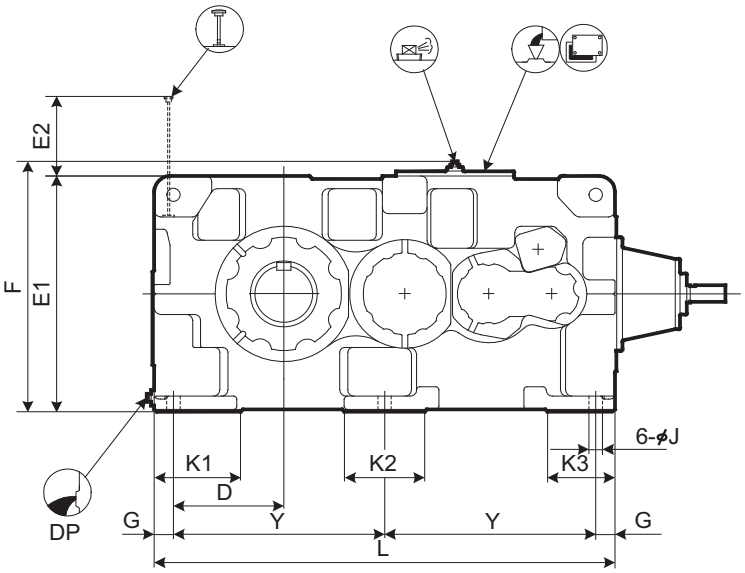

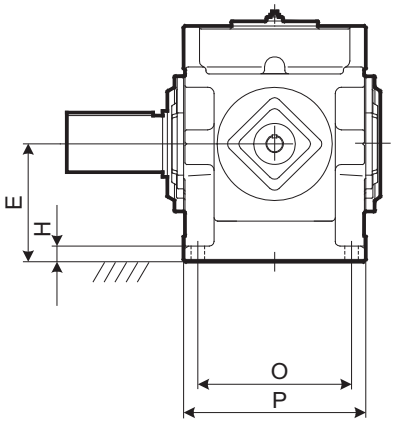

Size	A	B	C	D	E	E1	E2	F	G	H	J	K1	K2	K3	L	O	P	Y
9090	1382	428	1272	345	375	750	198	797	60	50	42	270	250	210	1440	480	570	660
9095	1412	458	1302	375	400	800	203	847	60	50	42	290	250	210	1500	480	570	690
9100	1570	468	1430	375	425	850	215	897	70	55	48	300	280	240	1610	560	650	735
9105	1604	493	1464	410	450	900	220	947	70	55	48	320	280	240	1680	560	650	770
9110	1670	508	1530	420	475	950	225	997	75	60	56	340	310	260	1810	610	710	830
9115	1719	558	1579	470	500	1000	224	1047	75	60	56	350	310	260	1910	610	710	880

Size	High Speed Shaft							DP	Wt. kg	Oil Qty. L
	R	S	W2/Depth	Key						
				X2	Y2	Z2	L2			
9090	110	50k6	M16/36	14	5.5	9	95	1 1/2"	2150	150
9095	110	50k6	M16/36	14	5.5	9	95	1 1/2"	2400	180
9100	140	60m6	M20/42	18	7	11	125	1 1/2"	2880	210
9105	140	60m6	M20/42	18	7	11	125	1 1/2"	3440	255
9110	140	60m6	M20/42	18	7	11	125	1 1/2"	4060	300
9115	140	60m6	M20/42	18	7	11	125	1 1/2"	4510	360

Unit: mm

1. Key and keyways are based on ISO R773-1969 Close keys (JIS B1301-1996 Parallel key in fastening type)
2. The oil quantity is approximate. Oil shall be supplied within the range shown on the oil gauge.
3. Refer to the page C-16 for dimensions shown in these drawings.
4. Refer to the page C-30 for the dimension of optional parts.

DIMENSIONS Right Angle Shaft Quadruple Reduction Horizontal Mounting 9090 ▶ 9115

Slow Speed Shaft

Solid Shaft	Hollow Shaft (Shrink Disk Type)
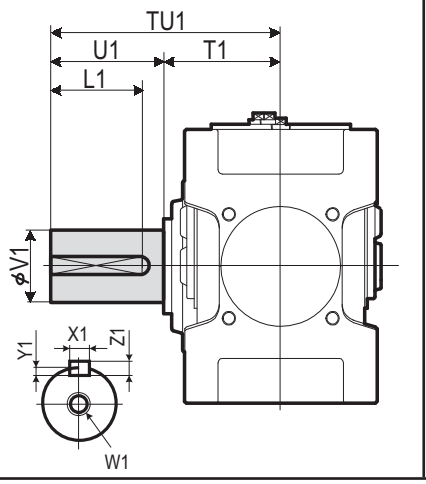	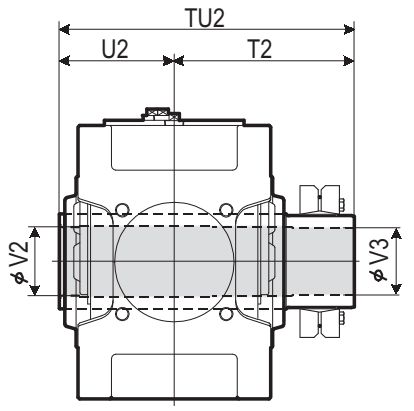 Refer to the page C-18 for details.

Size	Solid Shaft									Hollow Shaft (Shrink Disk Type)				
	TU1	T1	U1	V1	W1/Depth	Key X1	Key Y1	Key Z1	Key L1	TU2	T2	U2	V2	V3
9090	650	350	300	180m6	M30/60	45	15	25	270	844	494	350	193	190
9095	700	350	350	190m6	M30/60	45	15	25	320	859	509	350	203	200
9100	740	390	350	200m6	M30/60	45	15	25	320	934	544	390	213	210
9105	740	390	350	220m6	M30/60	50	17	28	320	949	559	390	223	220
9110	770	420	350	220m6	M30/60	50	17	28	320	1030	610	420	243	240
9115	830	420	410	240m6	M30/60	56	20	32	375	1065	645	420	253	250

Unit: mm

Standard Shaft Arrangement Configuration

RL	RR	RB	LR	LL	LB
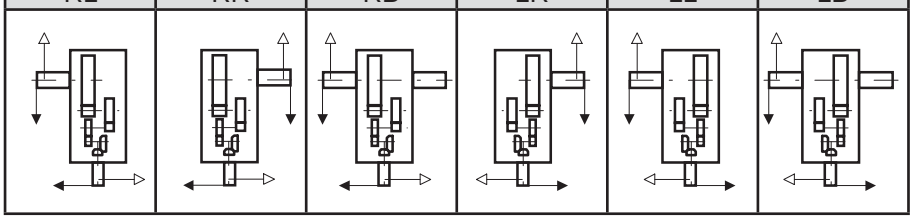					

Nomenclature

P H D [Size] R 4 - [Shaft Arrangement] [Low Speed Shaft Type] - [Nominal Reduction Ratio]

Size: 9090, 9095, 9100, 9105, 9110, 9115

Shaft Arrangement: RL, RR, RB, LR, LL, LB

Low Speed Shaft Type:
(blank): Solid Shaft
T : Hollow Shaft (Shrink Disk type)

Size	Nominal Reduction Ratio 90	100	112	125	140	160	180	200	224	250	280	315	355	400
9090	○	○	○	○	○	○	○	○	○	○	○	○	○	
9095		○	○	○	○	○	○	○	○	○	○	○	○	○
9100	○	○	○	○	○	○	○	○	○	○	○	○	○	
9105		○	○	○	○	○	○	○	○	○	○	○	○	○
9110	○	○	○	○	○	○	○	○	○	○	○	○	○	
9115		○	○	○	○	○	○	○	○	○	○	○	○	○

Air Breather | Air Vent | Oil Fill | Drain Plug | Dip Stick | Oil Gauge | Inspection Cover | Oil Pump | Backstop (Option) | Opposite Side

DIMENSIONS Right Angle Shaft Quadruple Reduction Horizontal Mounting 9118 ▶ 9126

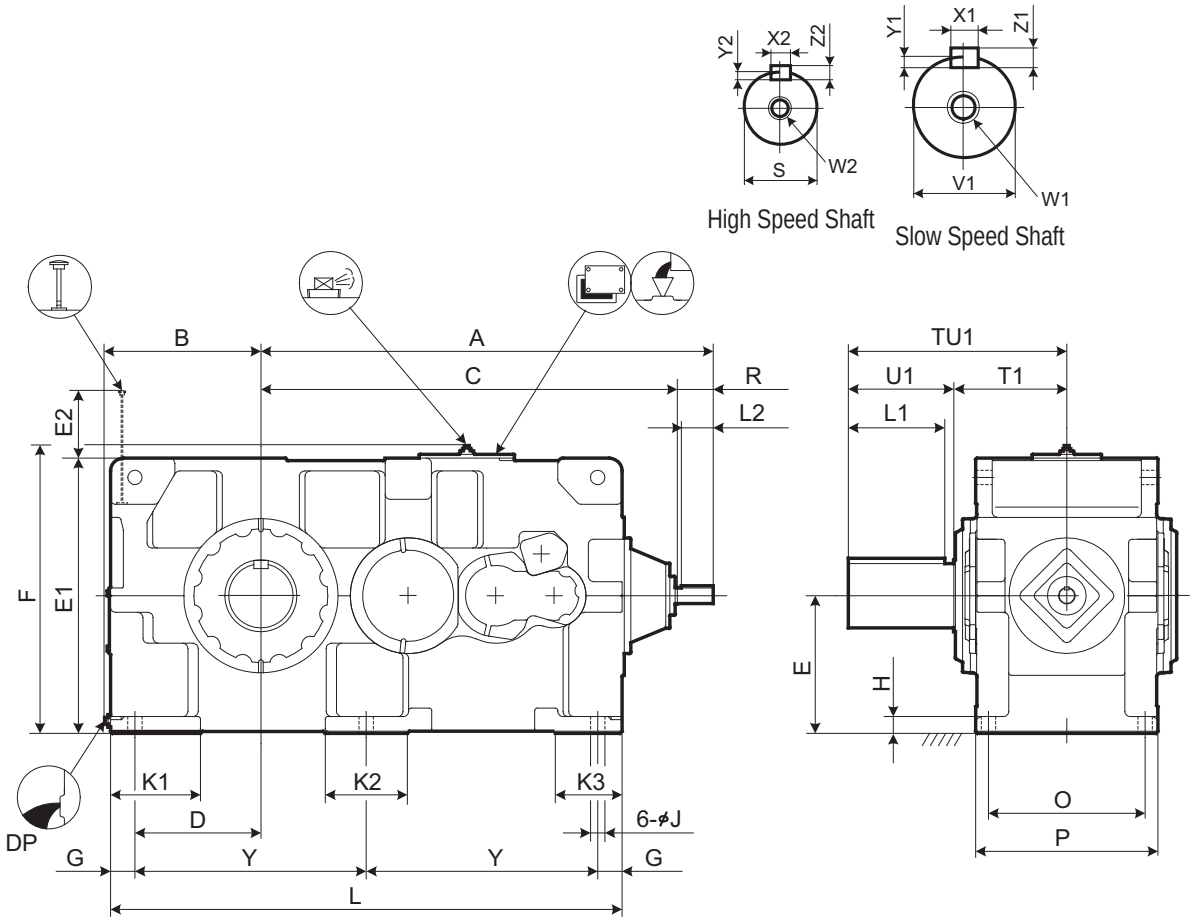

Size	A	B	C	D	E	E1	E2	F	G	H	J	K1	K2	K3	L	O	P	Y
9118	1760	608	1620	490	535	1070	263	1117	95	65	56	350	320	260	1990	610	710	900
9121	1970	663	1830	545	580	1160	257	1207	95	70	56	390	300	270	2180	680	780	995
9126	1970	663	1830	545	580	1160	257	1207	95	70	56	390	300	270	2180	680	780	995

Size	High Speed Shaft							DP	Wt. kg	Oil Qty. L
	R	S	W2/Depth	Key						
				X2	Y2	Z2	L2			
9118	140	60m6	M20/42	18	7	11	125	1 1/2"	5100	390
9121	140	65m6	M20/42	18	7	11	125	1 1/2"	6150	540
9126	140	65m6	M20/42	18	7	11	125	1 1/2"	6450	530

Size	Slow Speed Shaft (Solid)								
	TU1	T1	U1	V1	W1/Depth	Key			
						X1	Y1	Z1	L1
9118	850	440	410	260m6	M36/70	56	20	32	375
9121	935	465	470	280m6	M36/70	63	20	32	425
9126	935	465	470	300m6	M36/70	70	22	36	425

Unit: mm

1. Key and keyways are based on ISO R773-1969 Close keys (JIS B1301-1996 Parallel key in fastening type)
2. The oil quantity is approximate. Oil shall be supplied within the range shown on the oil gauge.
3. Consult us for the dimensions not shown in these drawings.

DIMENSIONS Right Angle Shaft Quadruple Reduction Horizontal Mounting 9118 ▶ 9126

Standard Shaft Arrangement Configuration

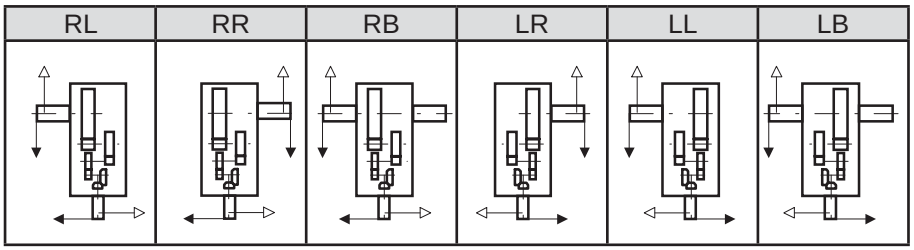

Nomenclature

P H D [ ] R 4 - [ ] - [ ]

Size: 9118, 9121, 9126

Shaft Arrangement: RL, RR, RB, LR, LL, LB

Nominal Reduction Ratio:

Size	Nominal Reduction Ratio													
	90	100	112	125	140	160	180	200	224	250	280	315	355	400
9118		○	○	○	○	○	○	○	○	○	○	○	○	○
9121	○	○	○	○	○	○	○	○	○	○	○	○	○	
9126	○	○	○	○	○	○	○	○	○	○	○	○	○	

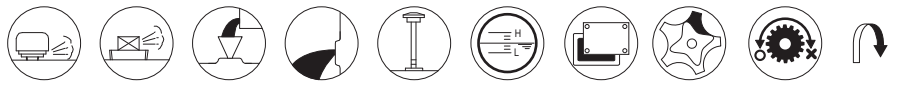

DIMENSIONS Right Angle Shaft Quadruple Reduction Horizontal Mounting 9128 ▶ 9136

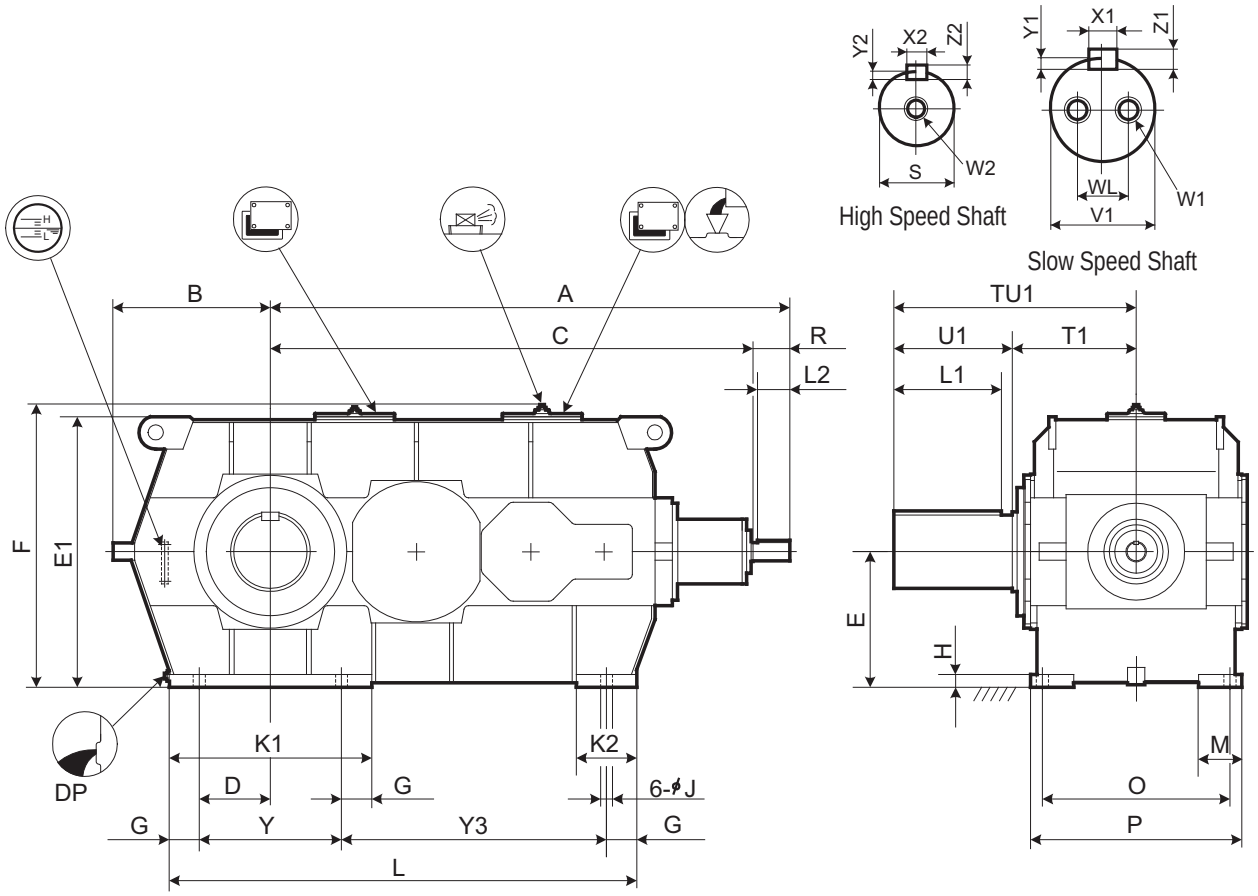

Note : Cast iron housing is available.
Consult us when the dimension is required.

Size	A	B	C	D	E	E1	F	G	H	J	K1	K2	L	M	O	P	Y	Y3
9128	2163	680	2023	330	600	1194	1241	140	55	66	940	280	1990	170	710	840	660	1050
9131	2410	730	2240	330	630	1256	1303	140	60	66	940	280	2170	200	850	980	660	1230
9136	2410	730	2240	330	630	1256	1303	140	60	66	940	280	2170	200	850	980	660	1230

Size	High Speed Shaft							DP	Wt. kg	Oil Qty. L
	R	S	W2/Depth	Key						
				X2	Y2	Z2	L2			
9128	140	75m6	M20/42	20	7.5	12	125	1 1/2"	7400	460
9131	170	85m6	M20/42	22	9	14	150	1 1/2"	9850	680
9136	170	85m6	M20/42	22	9	14	150	1 1/2"	10200	660

Size	Slow Speed Shaft (Solid)									
	TU1	T1	U1	V1	W1/Depth	WL	Key			
							X1	Y1	Z1	L1
9128	950	480	470	320m6	M36/70	200	70	22	36	425
9131	1100	550	550	340m6	M36/70	215	80	25	40	500
9136	1110	560	550	360m6	M36/70	230	80	25	40	500

Unit: mm

1. Key and keyways are based on ISO R773-1969 Close keys (JIS B1301-1996 Parallel key in fastening type)
2. The oil quantity is approximate. Oil shall be supplied within the range shown on the oil gauge.
3. Consult us for the dimensions not shown in these drawings.

DIMENSIONS Right Angle Shaft Quadruple Reduction Horizontal Mounting 9128 ▶ 9136

Standard Shaft Arrangement Configuration

RL	RR	RB	LR	LL	LB

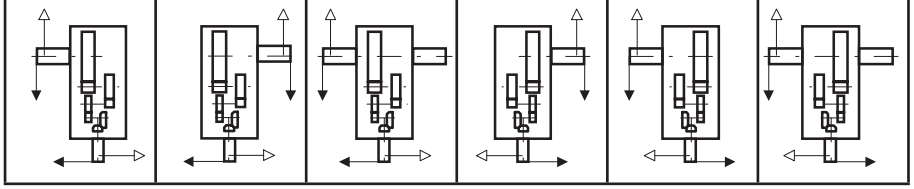

Nomenclature

P H D [ ] R 4 A - [ ] - [ ]

Size: 9128, 9131, 9136

Shaft Arrangement: RL, RR, RB, LR, LL, LB

Nominal Reduction Ratio

Size	Nominal Reduction Ratio														
	71	80	90	100	112	125	140	160	180	200	224	250	280	315	355
9128			○	○	○	○	○	○	○	○	○	○	○	○	○
9131	○	○	○	○	○	○	○	○	○	○	○	○	○		
9136	○	○	○	○	○	○	○	○	○	○	○	○	○		

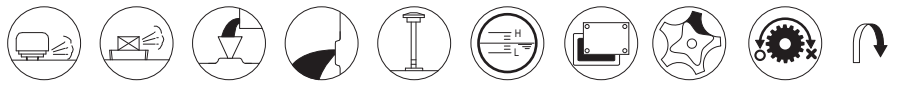

DIMENSIONS Right Angle Shaft Double Reduction Vertical Mounting 9015 ▶ 9055

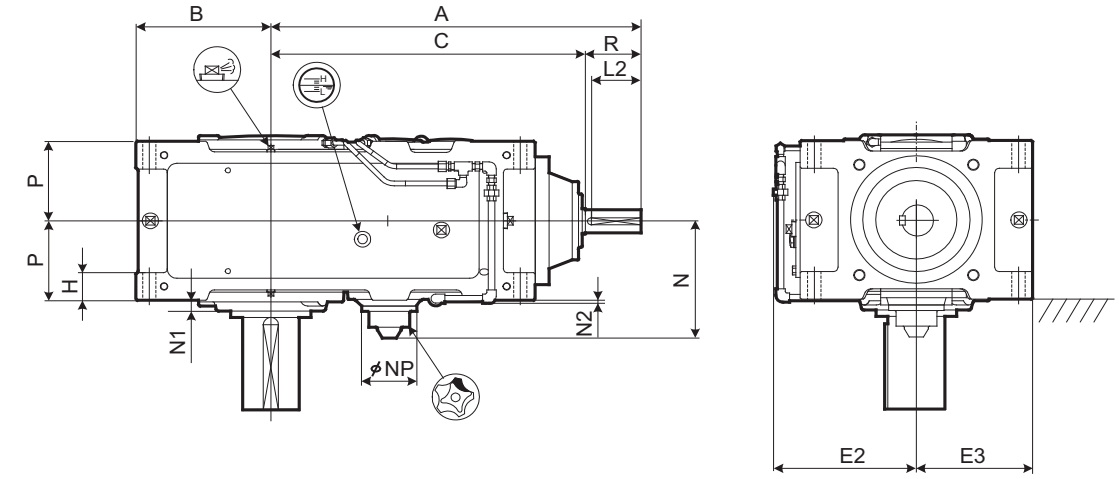

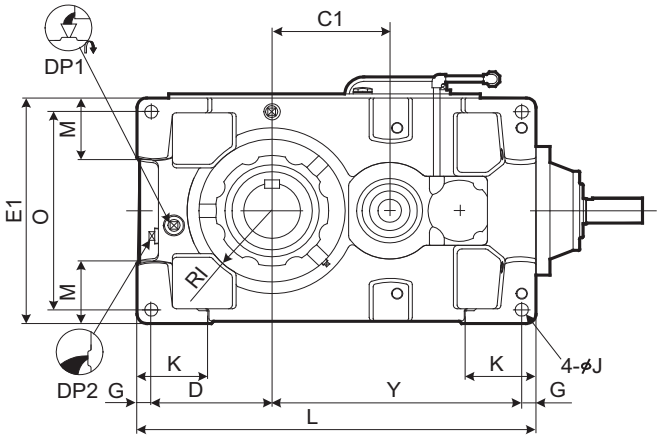

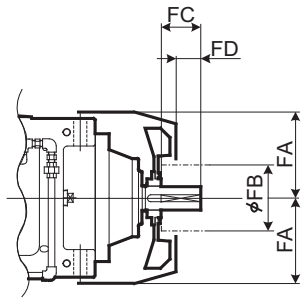

With Fan

Refer to the page C-20 for details.

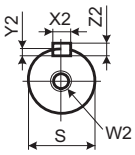

High Speed Shaft

Size	A	B	C	C1	D	E1	E2	E3	G	H	RI	J	K	L	M	N	N1	N2	NP	O	P	Y
9015	507	160	427	115	140	270	195	135	20	35	80	15	95	440	70	189	25	14	100	230	102.5	260
9025	545	175	465	135	155	310	215	155	20	40	87.5	19	110	505	75	201.5	23	12	100	270	117.5	310
9030	645	200	535	155	175	320	220	160	25	50	105	24	120	590	85	224	22	9	117	270	132.5	365
9035	676	219	566	186	194	370	245	185	25	50	120	24	120	640	100	224	22	9	117	320	132.5	396
9040	705	235	595	180	205	400	260	200	30	60	120	28	150	685	100	241.5	15	2	117	340	157.5	420
9045	744	256	634	219	226	440	266	220	30	60	140	28	150	745	120	241.5	17.5	2	117	380	157.5	459
9050	755	255	645	210	225	420	270	210	30	60	140	28	150	775	110	252	23	7	137	360	172.5	490
9055	794	286	684	249	256	490	305	245	30	60	155	28	150	845	135	252	23	7	137	430	172.5	529

Size	High Speed Shaft							Fan				DP1	DP2	Wt. kg	Oil Qty. L
	R	S	W2/Depth	Key X2	Key Y2	Key Z2	L2	FA	FB	FC	FD				
9015	80	28k6	M12/28	8	4	7	70	125	125	50	30	3/4"	3/4"	95	5
9025	80	35k6	M12/28	10	5	8	70	135	140	50	30	3/4"	3/4"	140	7
9030	110	40k6	M16/36	14	5.5	9	95	150	140	80	52	3/4"	3/4"	205	7
9035	110	40k6	M16/36	14	5.5	9	95	150	140	80	52	3/4"	3/4"	225	9
9040	110	45k6	M16/36	14	5.5	9	95	170	160	80	52	1"	1"	305	19
9045	110	45k6	M16/36	14	5.5	9	95	170	160	80	52	1"	1"	365	23
9050	110	50k6	M16/36	14	5.5	9	95	190	160	80	52	1"	1"	435	20
9055	110	50k6	M16/36	14	5.5	9	95	190	160	80	52	1"	1"	495	26

Unit: mm

1. Key and keyways are based on ISO R773-1969 Close keys (JIS B1301-1996 Parallel key in fastening type)
2. The oil quantity is approximate. Oil shall be supplied within the range shown on the oil gauge.
3. Refer to the page C-12 for dimensions shown in these drawings.
4. Refer to the page C-25 for the dimension of optional parts.

DIMENSIONS Right Angle Shaft Double Reduction Vertical Mounting 9015 ▶ 9055

Slow Speed Shaft

Solid Shaft	Hollow Shaft (Shrink Disk Type)	Hollow Shaft (Key Type)
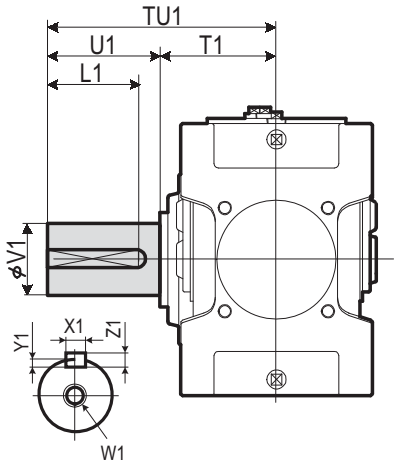	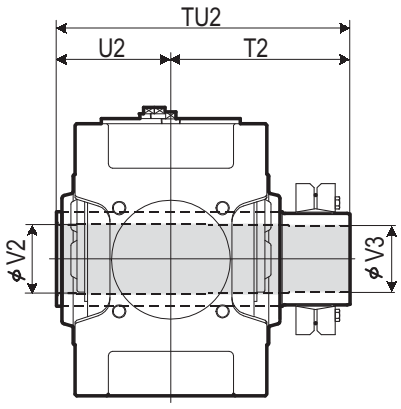 Refer to the page C-18 for details.	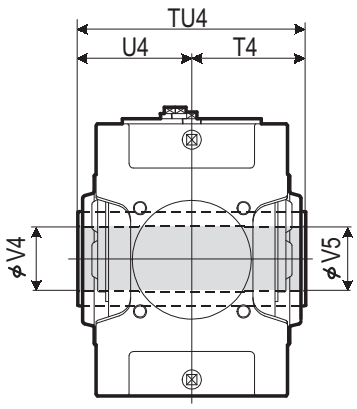 Refer to the page C-18 for details.

Size	Solid Shaft									Hollow Shaft (Shrink Disk Type)					Hollow Shaft (Key Type)				
	TU1	T1	U1	V1	W1/Depth	Key X1	Y1	Z1	L1	TU2	T2	U2	V2	V3	TU4	T4	U4	V4	V5
9015	245	135	110	58m6	M20/42	18	7	11	95	328	193	135	63	60	270	135	135	55	55
9025	285	145	140	70m6	M20/42	20	7.5	12	125	358	213	145	73	70	300	150	150	65	65
9030	330	160	170	80m6	M20/42	22	9	14	150	393	233	160	83	80	330	165	165	75	75
9035	330	160	170	90m6	M20/42	25	9	14	150	403	243	160	88	85	330	165	165	85	85
9040	349	179	170	95m6	M24/50	25	9	14	150	448	268	180	98	95	360	180	180	90	90
9045	391	181	210	105m6	M24/50	28	10	16	190	463	283	180	108	105	370	185	185	105	105
9050	411	201	210	110m6	M24/50	28	10	16	190	503	303	200	108	105	410	205	205	105	105
9055	411	201	210	120m6	M24/50	32	11	18	185	528	323	205	123	120	410	205	205	115	115

Unit: mm

Standard Shaft Arrangement Configuration

RL	RR
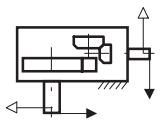	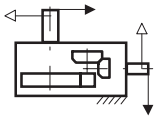

Nomenclature

P V A [ ] R 2 - [ ] [ ] [ ] - [ ]

Size: 9015, 9025, 9030, 9035, 9040, 9045, 9050, 9055

Shaft Arrangement: RL, RR

Low Speed Shaft Type:
- (blank) : Solid Shaft
- T : Hollow Shaft (Shrink Disk type)
- K : Hollow Shaft (Key type)

Fan:
- (blank) : Without Fan
- F : With Fan

Nominal Reduction Ratio

Size	6.3	7.1	8	9	10	11.2	12.5	14	16	18	20	22.4
9015	○	○	○	○	○	○	○	○	○	○		
9025	○	○	○	○	○	○	○	○	○	○		
9030	○	○	○	○	○	○	○	○	○	○		
9035			○	○	○	○	○	○	○	○	○	○
9040	○	○	○	○	○	○	○	○	○	○		
9045			○	○	○	○	○	○	○	○	○	○
9050	○	○	○	○	○	○	○	○	○	○		
9055				○	○	○	○	○	○	○	○	○

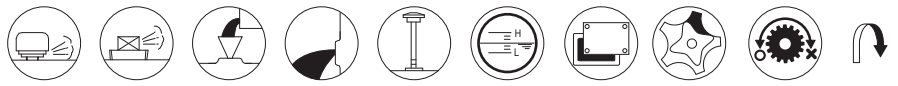

Air Breather, Air Vent, Oil Fill, Drain Plug, Dip Stick, Oil Gauge, Inspection Cover, Oil Pump, Backstop (Option), Opposite Side

DIMENSIONS Right Angle Shaft Double Reduction Vertical Mounting 9060 ▶ 9085

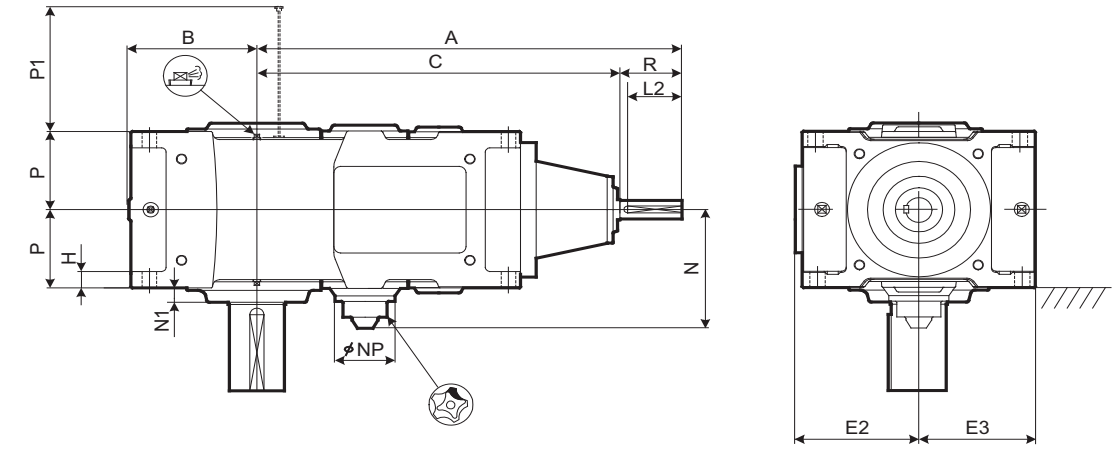

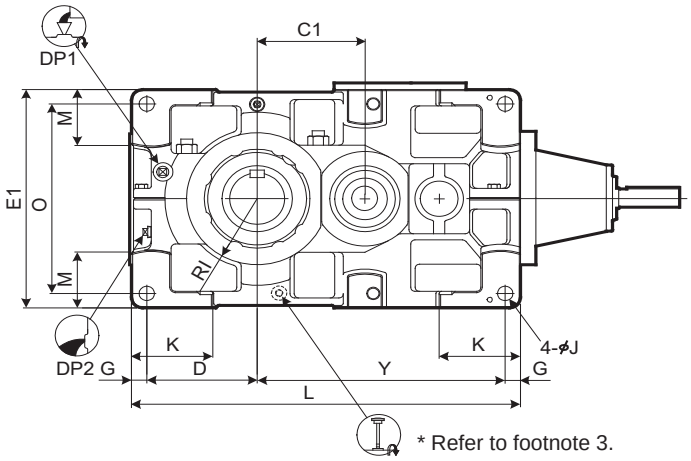

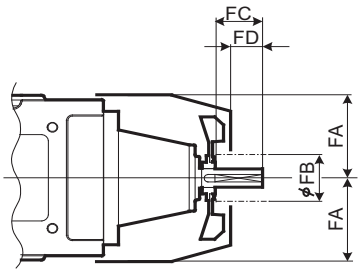

With Fan

Refer to the page C-20 for details.

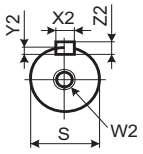

High Speed Shaft

Speed Reducer

Selection Tables

Dimension Tables

Size	A	B	C	C1	D	E1	E2	E3	G	H	RI	J	K	L	M	N	N1	NP	O	P	P1	Y
9060	865	299	725	245	251	530	282	265	35	35	160	35	180	885	140	272	35	137	460	190	229	564
9065	911	338	771	291	290	600	317	300	35	35	175	35	180	970	175	272	38	137	530	190	229	610
9070	965	336	825	285	283	600	317	300	40	40	175	42	215	1020	155	303	38	137	520	215	262	657
9075	1018	383	878	338	330	670	352	335	40	52	190	42	220	1120	195	303	40	137	590	215	262	710
9080	1080	378	940	330	325	670	352	335	40	52	190	42	220	1155	170	323	45	137	590	230	295	750
9085	1136	422	996	386	369	750	392	375	40	52	215	42	220	1255	210	323	40	137	670	230	295	806

Size	High Speed Shaft							Fan				DP1	DP2	Wt. kg	Oil Qty. L
	R	S	W2/Depth	Key X2	Key Y2	Key Z2	L2	FA	FB	FC	FD				
9060	140	60m6	M20/42	18	7	11	125	220	160	105	65	1"	1"	600	Refer to the next page.
9065	140	60m6	M20/42	18	7	11	125	220	160	105	65	1"	1"	725	
9070	140	65m6	M20/42	18	7	11	125	245	200	105	65	1"	1"	920	
9075	140	65m6	M20/42	18	7	11	125	245	200	105	65	1"	1"	1170	
9080	140	75m6	M20/42	20	7.5	12	125	270	225	105	60	1"	1"	1300	
9085	140	75m6	M20/42	20	7.5	12	125	270	225	105	60	1"	1"	1560	

Unit: mm

1. Key and keyways are based on ISO R773-1969 Close keys (JIS B1301-1996 Parallel key in fastening type)
2. The oil quantity is approximate. Oil shall be supplied within the range shown on the oil gauge.
3. Shaft arrangement RR is equipped with oil gauge. Refer to the page C-28.
4. Refer to the page C-14 for dimensions shown in these drawings.
5. Refer to the page C-28 for the dimension of optional parts.

DIMENSIONS Right Angle Shaft Double Reduction Vertical Mounting 9060 ▶ 9085

Slow Speed Shaft

Solid Shaft	Hollow Shaft (Shrink Disk Type)	Hollow Shaft (Key Type)
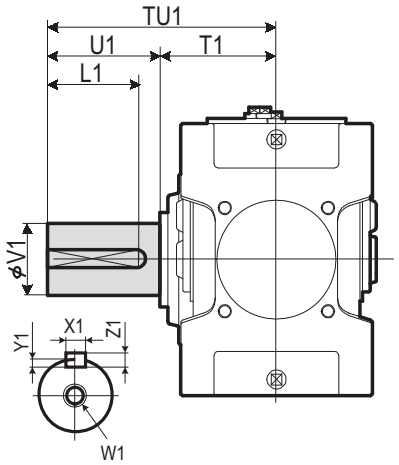	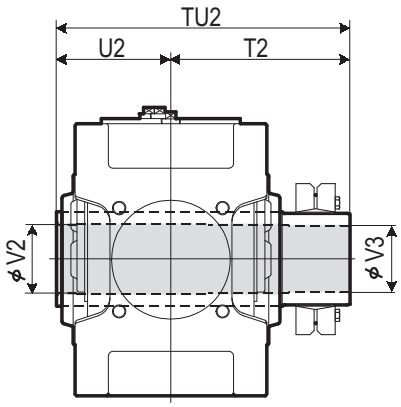 Refer to the page C-18 for details.	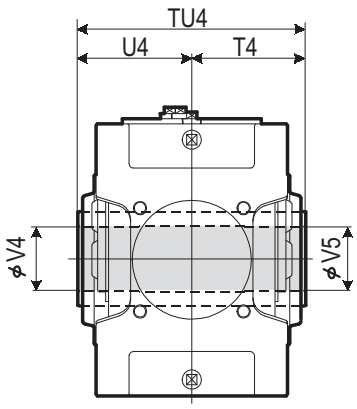 Refer to the page C-18 for details.

Size	Solid Shaft									Hollow Shaft (Shrink Disk Type)					Hollow Shaft (Key Type)				
	TU1	T1	U1	V1	W1/Depth	Key X1	Key Y1	Key Z1	Key L1	TU2	T2	U2	V2	V3	TU4	T4	U4	V4	V5
9060	440	230	210	125m6	M24/50	32	11	18	185	583	353	230	128	125	470	235	235	125	123
9065	484	234	250	140m6	M30/60	36	12	20	225	594	359	235	143	140	480	240	240	145	143
9070	509	259	250	145m6	M30/60	36	12	20	225	644	384	260	148	145	530	265	265	145	143
9075	562	262	300	160m6	M30/60	40	13	22	275	651	386	265	158	155	530	265	265	150	148
9080	582	282	300	165m6	M30/60	40	13	22	275	714	429	285	173	170	570	285	285	165	163
9085	585	285	300	175m6	M30/60	45	15	25	270	714	429	285	183	180	570	285	285	175	173

Unit: mm

Standard Shaft Arrangement Configuration

RL	RR
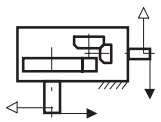	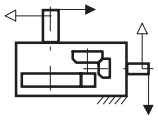

Approx. Oil Qty.

Size	Nominal Reduction Ratio 6.3-9	10-18	8-11.2	12.5-22.4
9060	25	28		
9065			32	36
9070	35	41		
9075			47	54
9080	46	55		
9085			58	68

Unit: liters

Nomenclature

P V D [Size] R 2 - [Shaft Arrangement] [Low Speed Shaft Type] [Fan] - [Nominal Reduction Ratio]

Size: 9060, 9065, 9070, 9075, 9080, 9085

Shaft Arrangement: RL, RR

Low Speed Shaft Type:
- (blank): Solid Shaft
- T : Hollow Shaft (Shrink Disk type)
- K : Hollow Shaft (Key type)

Fan:
- (blank): Without Fan
- F : With Fan

Size	Nominal Reduction Ratio 6.3	7.1	8	9	10	11.2	12.5	14	16	18	20	22.4
9060	○	○	○	○	○	○	○	○	○	○		
9065				○	○	○	○	○	○	○	○	○
9070	○	○	○	○	○	○	○	○	○	○		
9075				○	○	○	○	○	○	○	○	○
9080	○	○	○	○	○	○	○	○	○	○		
9085					○	○	○	○	○	○	○	○

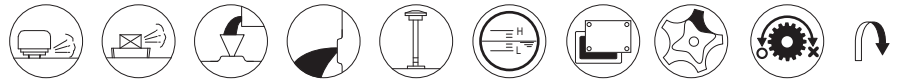

Air Breather, Air Vent, Oil Fill, Drain Plug, Dip Stick, Oil Gauge, Inspection Cover, Oil Pump, Backstop (Option), Opposite Side

DIMENSIONS Right Angle Shaft Triple Reduction Vertical Mounting 9030 ▶ 9055

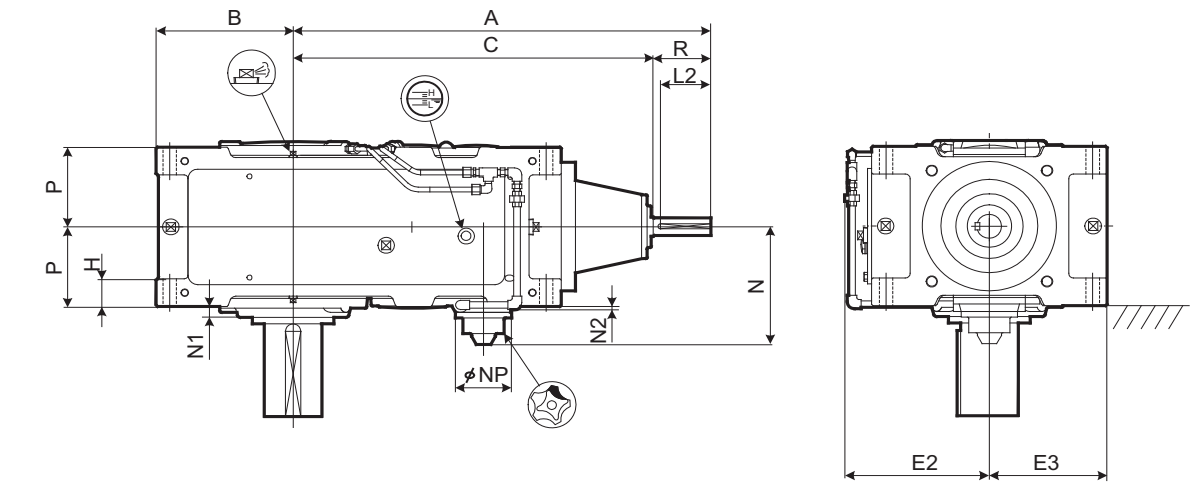

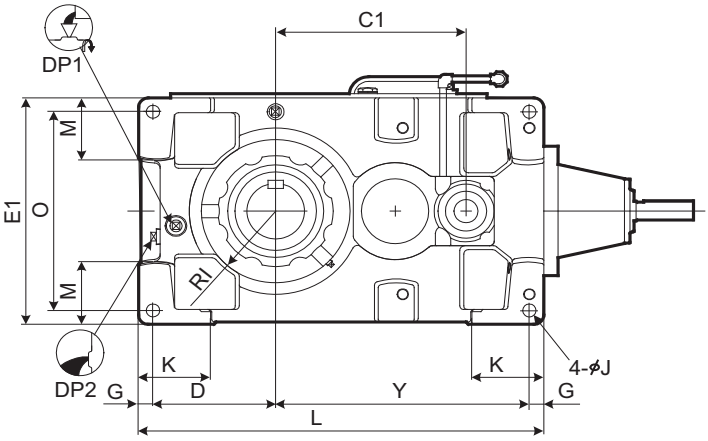

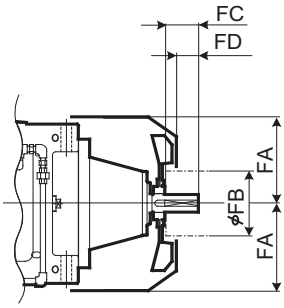

With Fan

Refer to the page C-21 for details.

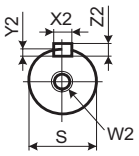

High Speed Shaft

Size	A	B	C	C1	D	E1	E2	E3	G	H	RI	J	K	L	M	N	N1	N2	NP	O	P	Y
9030	656	200	576	264	175	320	220	160	25	50	105	24	120	590	85	211	22	9	100	270	132.5	365
9035	687	219	607	295	194	370	245	185	25	50	120	24	120	640	100	211	22	9	100	320	132.5	396
9040	716	235	636	306	205	400	260	200	30	60	120	28	150	685	100	237.5	15	2	117	340	157.5	420
9045	755	256	675	345	226	440	266	220	30	60	140	28	150	745	120	237.5	17.5	2	117	380	157.5	459
9050	808	255	728	358	225	420	270	210	30	60	140	28	150	775	110	257.5	23	7	117	360	172.5	490
9055	847	286	767	397	256	490	305	245	30	60	155	28	150	845	135	257.5	23	7	117	430	172.5	529

Size	High Speed Shaft							Fan				DP1	DP2	Wt. kg	Oil Qty. L
	R	S	W2/Depth	Key				FA	FB	FC	FD				
				X2	Y2	Z2	L2								
9030	80	28k6	M10/22	8	4	7	70	150	125	50	30	3/4"	3/4"	210	9
9035	80	28k6	M10/22	8	4	7	70	150	125	50	30	3/4"	3/4"	230	12
9040	80	30k6	M10/22	8	4	7	70	170	125	50	30	1"	1"	305	18
9045	80	30k6	M10/22	8	4	7	70	170	125	50	30	1"	1"	365	22
9050	80	35k6	M12/28	10	5	8	70	190	140	50	22	1"	1"	445	21
9055	80	35k6	M12/28	10	5	8	70	190	140	50	22	1"	1"	505	30

Unit: mm

1. Key and keyways are based on ISO R773-1969 Close keys (JIS B1301-1996 Parallel key in fastening type)
2. The oil quantity is approximate. Oil shall be supplied within the range shown on the oil gauge.
3. Refer to the page C-12 for dimensions shown in these drawings.
4. Refer to the page C-25 for the dimension of optional parts.

DIMENSIONS Right Angle Shaft Triple Reduction Vertical Mounting 9030 ▶ 9055

Slow Speed Shaft

Solid Shaft	Hollow Shaft (Shrink Disk Type)	Hollow Shaft (Key Type)
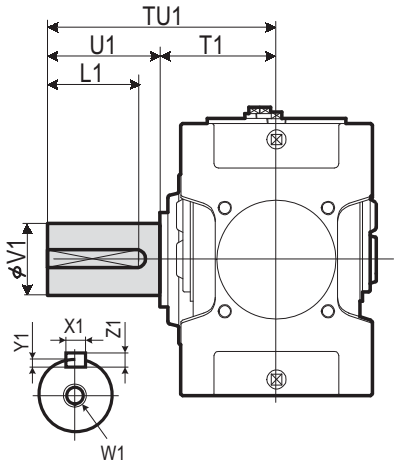	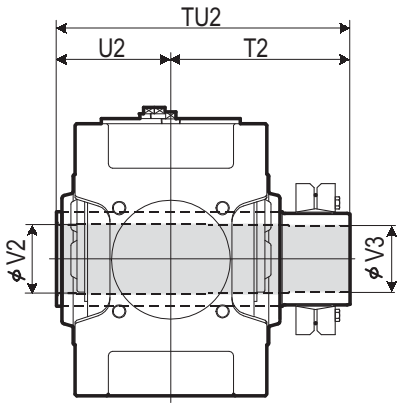 Refer to the page C-18 for details.	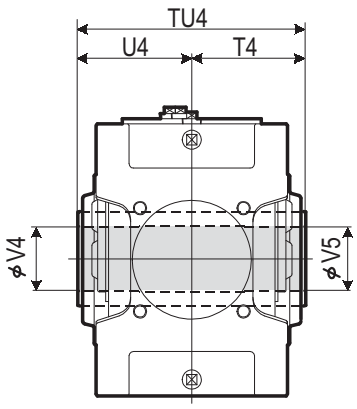 Refer to the page C-18 for details.

Size	Solid Shaft									Hollow Shaft (Shrink Disk Type)					Hollow Shaft (Key Type)				
	TU1	T1	U1	V1	W1/Depth	Key X1	Y1	Z1	L1	TU2	T2	U2	V2	V3	TU4	T4	U4	V4	V5
9030	330	160	170	80m6	M20/42	22	9	14	150	393	233	160	83	80	330	165	165	75	75
9035	330	160	170	90m6	M20/42	25	9	14	150	403	243	160	88	85	330	165	165	85	85
9040	349	179	170	95m6	M24/50	25	9	14	150	448	268	180	98	95	360	180	180	90	90
9045	391	181	210	105m6	M24/50	28	10	16	190	463	283	180	108	105	370	185	185	105	105
9050	411	201	210	110m6	M24/50	28	10	16	190	503	303	200	108	105	410	205	205	105	105
9055	411	201	210	120m6	M24/50	32	11	18	185	528	323	205	123	120	410	205	205	115	115

Unit: mm

Standard Shaft Arrangement Configuration

RL	RR
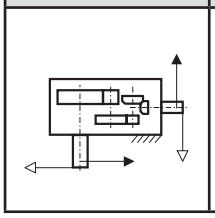	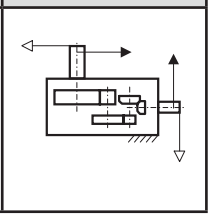

Nomenclature

P V A [ ] R 3 - [ ] [ ] [ ] - [ ]

Size: 9030, 9035, 9040, 9045, 9050, 9055

Shaft Arrangement: RL, RR

Low Speed Shaft Type:
- (blank) : Solid Shaft
- T : Hollow Shaft (Shrink Disk type)
- K : Hollow Shaft (Key type)

Fan:
- (blank) : Without Fan
- F : With Fan

Nominal Reduction Ratio

Size	Nominal Reduction Ratio 20	22.4	25	28	31.5	35.5	40	45	50	56	63	71	80	90
9030	○	○	○	○	○	○	○	○	○	○	○	○		
9035			○	○	○	○	○	○	○	○		○	○	○
9040	○	○	○	○	○	○	○	○		○	○	○		
9045				○	○	○	○	○	○	○		○	○	○
9050	○	○	○	○	○	○	○	○	○	○	○	○		
9055			○	○	○	○	○	○	○	○	○	○	○	○

Air Breather, Air Vent, Oil Fill, Drain Plug, Dip Stick, Oil Gauge, Inspection Cover, Oil Pump, Backstop (Option), Opposite Side

DIMENSIONS Right Angle Shaft Triple Reduction Vertical Mounting 9060 ▶ 9085

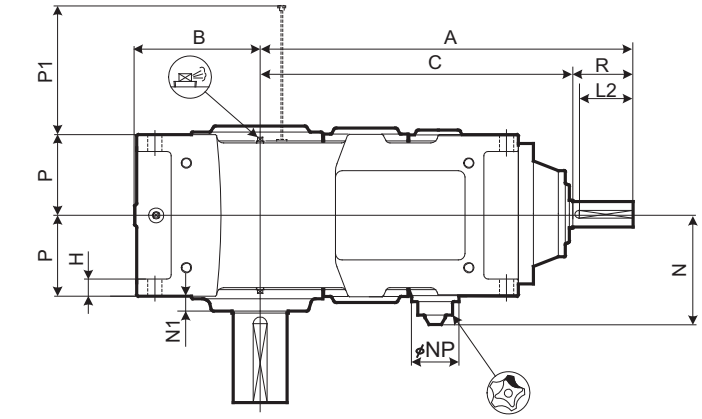

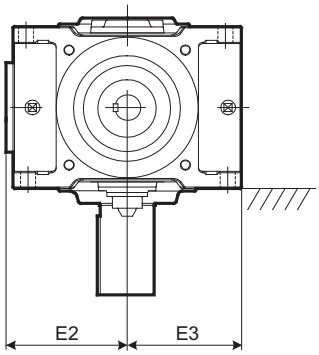

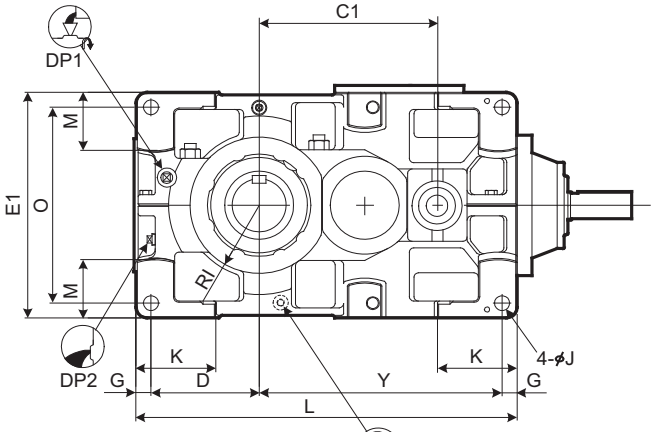

* Refer to footnote 3.

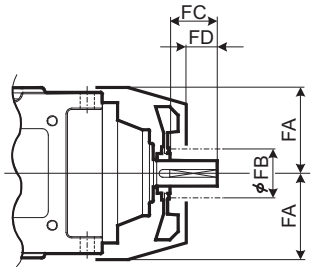

With Fan

Refer to the page C-21 for details.

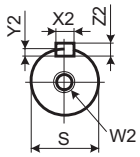

High Speed Shaft

Speed Reducer

Selection Tables

Dimension Tables

Size	A	B	C	C1	D	E1	E2	E3	G	H	RI	J	K	L	M	N	N1	NP	O	P	P1	Y
9060	939	299	829	414	251	530	282	265	35	35	160	35	180	885	140	277.5	35	117	460	190	213	564
9065	985	338	875	460	290	600	317	300	35	35	175	35	180	970	175	277.5	38	117	530	190	213	610
9070	1027	336	917	482	283	600	317	300	40	40	175	42	215	1020	155	302.5	38	117	520	215	233	657
9075	1080	383	970	535	330	670	352	335	40	52	190	42	220	1120	195	302.5	40	117	590	215	233	710
9080	1176	378	1036	556	325	670	352	335	40	52	190	42	220	1155	170	322.5	45	117	590	230	268	750
9085	1232	422	1092	612	369	750	392	375	40	52	215	42	220	1255	210	322.5	40	117	670	230	268	806

Size	High Speed Shaft							Fan				DP1	DP2	Wt. kg	Oil Qty. L
	R	S	W2/Depth	Key				FA	FB	FC	FD				
				X2	Y2	Z2	L2								
9060	110	45k6	M16/36	14	5.5	9	95	220	160	80	52	1"	1"	660	28
9065	110	45k6	M16/36	14	5.5	9	95	220	160	80	52	1"	1"	785	35
9070	110	50k6	M16/36	14	5.5	9	95	245	160	80	52	1"	1"	940	46
9075	110	50k6	M16/36	14	5.5	9	95	245	160	80	52	1"	1"	1190	59
9080	140	60m6	M20/42	18	7	11	125	270	160	105	65	1"	1"	1350	60
9085	140	60m6	M20/42	18	7	11	125	270	160	105	65	1"	1"	1610	80

Unit: mm

1. Key and keyways are based on ISO R773-1969 Close keys (JIS B1301-1996 Parallel key in fastening type)
2. The oil quantity is approximate. Oil shall be supplied within the range shown on the oil gauge.
3. Shaft arrangement RR is equipped with oil gauge. Refer to the page C-28.
4. Refer to the page C-14 for dimensions shown in these drawings.
5. Refer to the page C-28 for the dimension of optional parts.

DIMENSIONS Right Angle Shaft Triple Reduction Vertical Mounting 9060 ▶ 9085

Slow Speed Shaft

Solid Shaft	Hollow Shaft (Shrink Disk Type)	Hollow Shaft (Key Type)
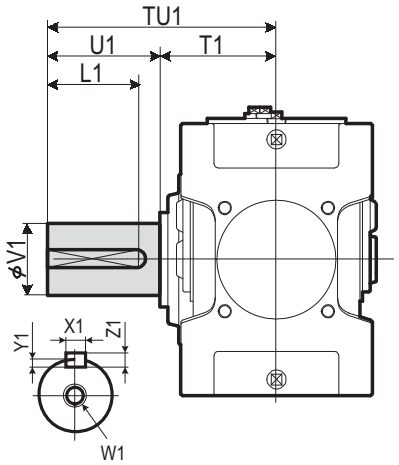	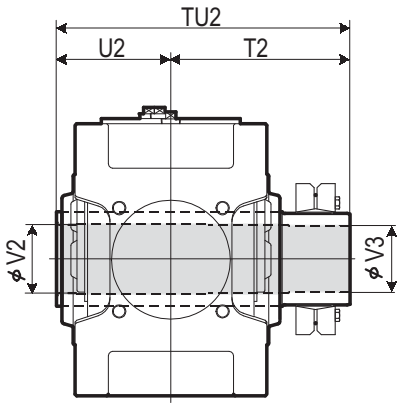 Refer to the page C-18 for details.	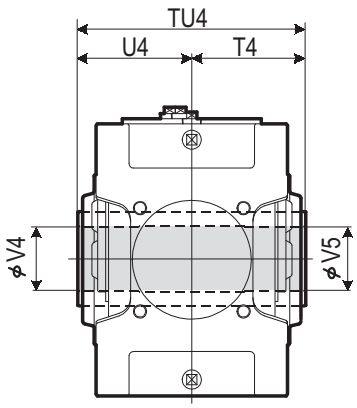 Refer to the page C-18 for details.

Size	Solid Shaft									Hollow Shaft (Shrink Disk Type)					Hollow Shaft (Key Type)				
	TU1	T1	U1	V1	W1/Depth	Key X1	Key Y1	Key Z1	Key L1	TU2	T2	U2	V2	V3	TU4	T4	U4	V4	V5
9060	440	230	210	125m6	M24/50	32	11	18	185	583	353	230	128	125	470	235	235	125	123
9065	484	234	250	140m6	M30/60	36	12	20	225	594	359	235	143	140	480	240	240	145	143
9070	509	259	250	145m6	M30/60	36	12	20	225	644	384	260	148	145	530	265	265	145	143
9075	562	262	300	160m6	M30/60	40	13	22	275	651	386	265	158	155	530	265	265	150	148
9080	582	282	300	165m6	M30/60	40	13	22	275	714	429	285	173	170	570	285	285	165	163
9085	585	285	300	175m6	M30/60	45	15	25	270	714	429	285	183	180	570	285	285	175	173

Unit: mm

Standard Shaft Arrangement Configuration

RL	RR
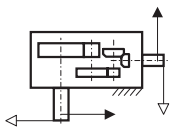	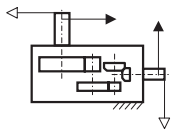

Nomenclature

P V D [ ] R 3 - [ ] [ ] [ ] - [ ]

Size: 9060, 9065, 9070, 9075, 9080, 9085

Shaft Arrangement: RL, RR

Low Speed Shaft Type:
(blank): Solid Shaft
T : Hollow Shaft (Shrink Disk type)
K : Hollow Shaft (Key type)

Fan:
(blank): Without Fan
F : With Fan

Nominal Reduction Ratio

Size	20	22.4	25	28	31.5	35.5	40	45	50	56	63	71	80	90
9060	○	○	○	○	○	○	○	○	○	○	○	○		
9065				○	○	○	○	○	○	○	○	○	○	○
9070	○	○	○	○	○	○	○	○	○	○	○	○		
9075				○	○	○	○	○	○	○	○	○	○	○
9080	○	○	○	○	○	○	○	○	○	○	○	○		
9085			○	○	○	○	○	○	○	○	○	○	○	○

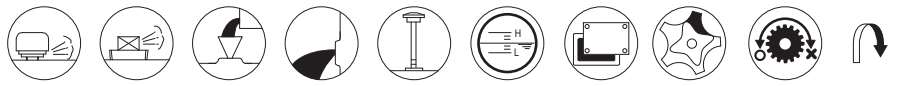

Air Breather, Air Vent, Oil Fill, Drain Plug, Dip Stick, Oil Gauge, Inspection Cover, Oil Pump, Backstop (Option), Opposite Side

DIMENSIONS Right Angle Shaft Triple Reduction Vertical Mounting 9090 ▶ 9115

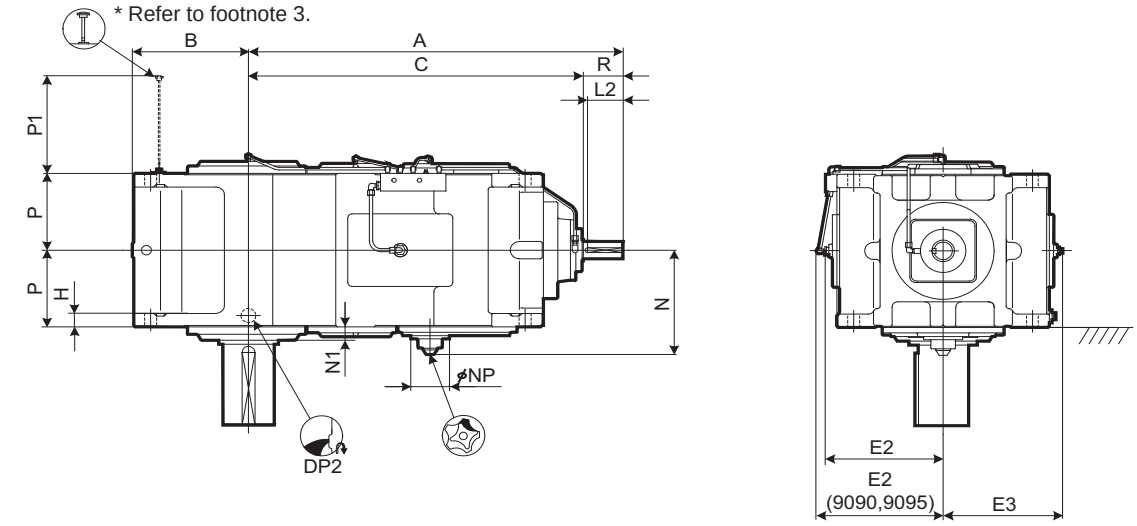

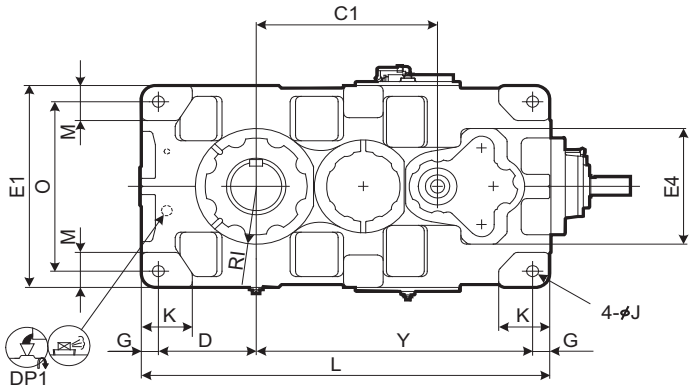

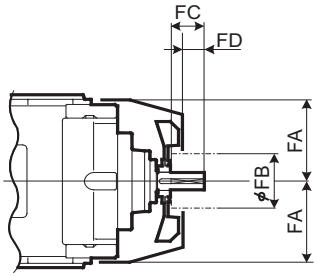

With Fan

Refer to the page C-21 for details.

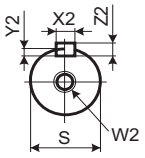

High Speed Shaft

Size	A	B	C	C1	D	E1	E2	E3	E4	G	H	RI	J	K	L	M	N	N1	NP	O	P	P1	Y
9090	1320	410	1180	640	345	750	449	421	430	60	50	215	42	180	1440	130	381	50	137	630	285	363	975
9095	1350	440	1210	670	375	800	474	446	430	60	50	235	42	200	1500	140	381	50	137	680	285	363	1005
9100	1474	450	1334		375	850	471	471	500	70	55	235	48	200	1610	150		60		710	325	411	1095
9105	1508	485	1368		410	900	496	496	500	70	55	260	48	220	1680	160		60		760	325	411	1130
9110	1684	500	1514		420	950	521	521	500	75	60	265	56	220	1810	170		55		800	355	446	1240
9115	1733	550	1563		470	1000	546	546	500	75	60	280	56	250	1910	180		55		850	355	446	1290

Size	High Speed Shaft							Fan				DP1	DP2	Wt. kg	Oil Qty. L
	R	S	W2/Depth	Key				FA	FB	FC	FD				
				X2	Y2	Z2	L2								
9090	140	65m6	M20/42	18	7	11	125	340	200	105	65	1"	1 1/2"	2170	120
9095	140	65m6	M20/42	18	7	11	125	340	200	105	65	1"	1 1/2"	2430	145
9100	140	75m6	M20/42	20	7.5	12	125	380	225	105	60	1"	1 1/2"	2970	170
9105	140	75m6	M20/42	20	7.5	12	125	380	225	105	60	1"	1 1/2"	3450	210
9110	170	85m6	M20/42	22	9	14	150	410	225	135	90	1"	1 1/2"	4150	230
9115	170	85m6	M20/42	22	9	14	150	410	225	135	90	1"	1 1/2"	4670	290

※ 9100 ~ 9115 are equipped with motor driven pumps. For details consult us.

Unit: mm

1. Key and keyways are based on ISO R773-1969 Close keys (JIS B1301-1996 Parallel key in fastening type)
2. The oil quantity is approximate. Oil shall be supplied within the range shown on the oil gauge.
3. Shaft arrangement RR is equipped with oil gauge. Refer to the page C-31.
4. Refer to the page C-16 for dimensions shown in these drawings.
5. Refer to the page C-31 for the dimension of optional parts.

DIMENSIONS Right Angle Shaft Triple Reduction Vertical Mounting 9090 ▶ 9115

Slow Speed Shaft

Solid Shaft	Hollow Shaft (Shrink Disk Type)
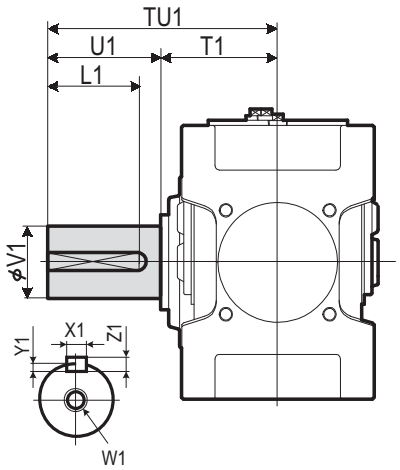	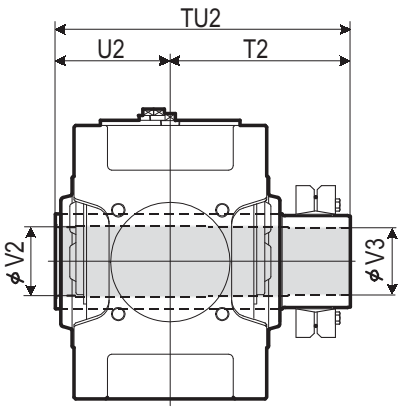 Refer to the page C-18 for details.

Size	Solid Shaft									Hollow Shaft (Shrink Disk Type)				
	TU1	T1	U1	V1	W1/Depth	Key X1	Key Y1	Key Z1	Key L1	TU2	T2	U2	V2	V3
9090	650	350	300	180m6	M30/60	45	15	25	270	844	494	350	193	190
9095	700	350	350	190m6	M30/60	45	15	25	320	859	509	350	203	200
9100	740	390	350	200m6	M30/60	45	15	25	320	934	544	390	213	210
9105	740	390	350	220m6	M30/60	50	17	28	320	949	559	390	223	220
9110	770	420	350	220m6	M30/60	50	17	28	320	1030	610	420	243	240
9115	830	420	410	240m6	M30/60	56	20	32	375	1065	645	420	253	250

Unit: mm

Standard Shaft Arrangement Configuration

RL	RR
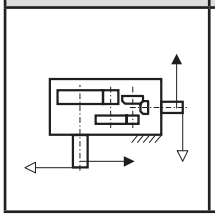	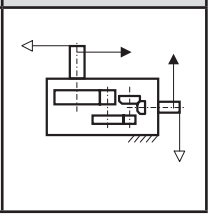

Nomenclature

P V D [ ] R 3 - [ ] [ ] [ ] - [ ]

Size: 9090, 9095, 9100, 9105, 9110, 9115

Shaft Arrangement: RL, RR

Low Speed Shaft Type: (blank): Solid Shaft; T: Hollow Shaft (Shrink Disk type)

Fan: (blank): Without Fan; F: With Fan

Nominal Reduction Ratio

Size	20	22.4	25	28	31.5	35.5	40	45	50	56	63	71	80	90
9090	○	○	○	○	○	○	○	○	○	○	○	○	○	
9095		○	○	○	○	○	○	○	○	○	○	○	○	○
9100	○	○	○	○	○	○	○	○	○	○	○	○	○	
9105		○	○	○	○	○	○	○	○	○	○	○	○	○
9110	○	○	○	○	○	○	○	○	○	○	○	○	○	
9115		○	○	○	○	○	○	○	○	○	○	○	○	○

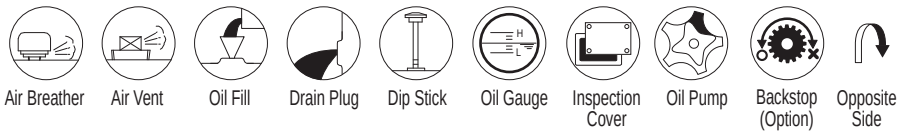

DIMENSIONS Right Angle Shaft Quadruple Reduction Vertical Mounting 9040 ▶ 9055

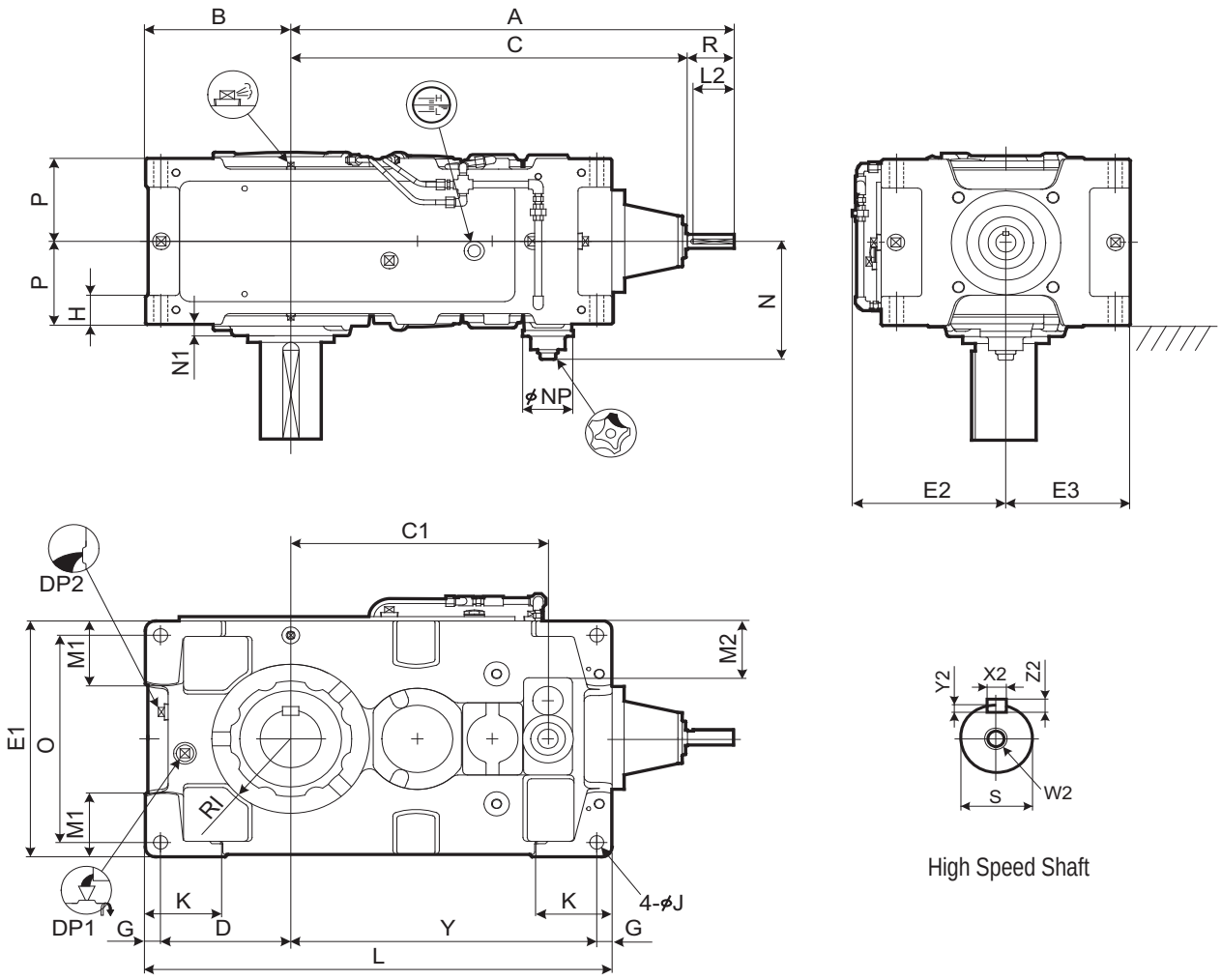

Size	A	B	C	C1	D	E1	E2	E3	G	H	RI	J	K	L	M1	M2	N	N1	NP	O	P	Y
9040	790	235	710	398	205	400	260	200	30	60	120	28	150	759	100	70	228.5	15	100	340	157.5	494
9045	829	256	749	437	226	440	277	220	30	60	140	28	150	819	120	90	228.5	17.5	100	380	157.5	533
9050	859	255	779	467	225	420	270	210	30	60	140	28	150	848	110	83	248.5	23	100	360	172.5	563
9055	898	286	818	506	256	490	305	245	30	60	155	28	150	918	135	118	248.5	23	100	430	172.5	602

Size	High Speed Shaft							DP1	DP2	Wt. kg	Oil Qty. L
	R	S	W2/Depth	Key							
				X2	Y2	Z2	L2				
9040	80	28k6	M10/22	8	4	7	70	1"	1"	325	18
9045	80	28k6	M10/22	8	4	7	70	1"	1"	395	22
9050	80	28k6	M10/22	8	4	7	70	1"	1"	460	24
9055	80	28k6	M10/22	8	4	7	70	1"	1"	520	34

Unit: mm

1. Key and keyways are based on ISO R773-1969 Close keys (JIS B1301-1996 Parallel key in fastening type)
2. The oil quantity is approximate. Oil shall be supplied within the range shown on the oil gauge.
3. Refer to the page C-13 for dimensions shown in these drawings.
4. Refer to the page C-25 for the dimension of optional parts.

DIMENSIONS Right Angle Shaft Quadruple Reduction Vertical Mounting 9040 ▶ 9055

Slow Speed Shaft

Solid Shaft	Hollow Shaft (Shrink Disk Type)	Hollow Shaft (Key Type)
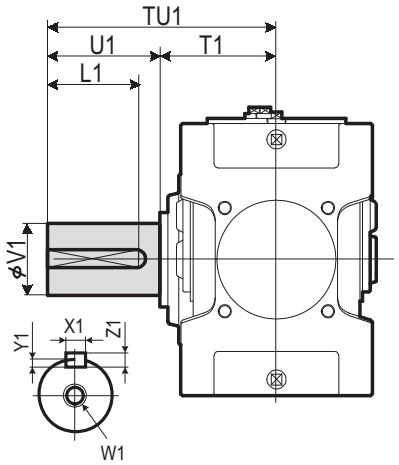	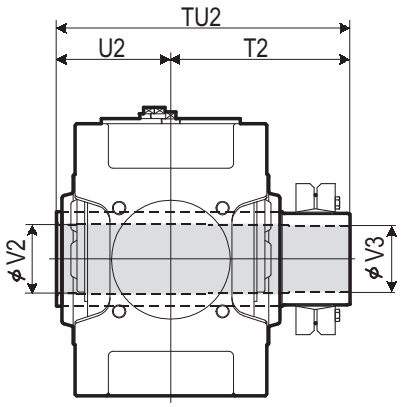 Refer to the page C-18 for details.	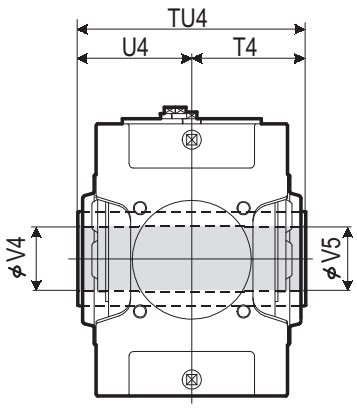 Refer to the page C-18 for details.

Size	Solid Shaft									Hollow Shaft (Shrink Disk Type)					Hollow Shaft (Key Type)				
	TU1	T1	U1	V1	W1/Depth	Key X1	Key Y1	Key Z1	Key L1	TU2	T2	U2	V2	V3	TU4	T4	U4	V4	V5
9040	349	179	170	95m6	M24/50	25	9	14	150	448	268	180	98	95	360	180	180	90	90
9045	391	181	210	105m6	M24/50	28	10	16	190	463	283	180	108	105	370	185	185	105	105
9050	411	201	210	110m6	M24/50	28	10	16	190	503	303	200	108	105	410	205	205	105	105
9055	411	201	210	120m6	M24/50	32	11	18	185	528	323	205	123	120	410	205	205	115	115

Unit: mm

Standard Shaft Arrangement Configuration

LR	LL
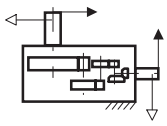	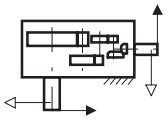

Nomenclature

P V A [ ] R 4 - [ ] [ ] - [ ]

Size: 9040, 9045, 9050, 9055

Shaft Arrangement: LR, LL

Low Speed Shaft Type:
(blank) : Solid Shaft
T : Hollow Shaft (Shrink Disk type)
K : Hollow Shaft (Key type)

Nominal Reduction Ratio

Size	80	90	100	112	125	140	160	180	200	224	250	280	315	355	400	450
9040	○	○	○	○	○	○										
9045				○	○	○	○	○								
9050	○	○	○	○	○	○	○	○	○	○	○	○	○	○		
9055				○	○	○	○	○	○	○	○	○	○	○	○	○

Air Breather, Air Vent, Oil Fill, Drain Plug, Dip Stick, Oil Gauge, Inspection Cover, Oil Pump, Backstop (Option), Opposite Side

DIMENSIONS Right Angle Shaft Quadruple Reduction Vertical Mounting 9060 ▶ 9085

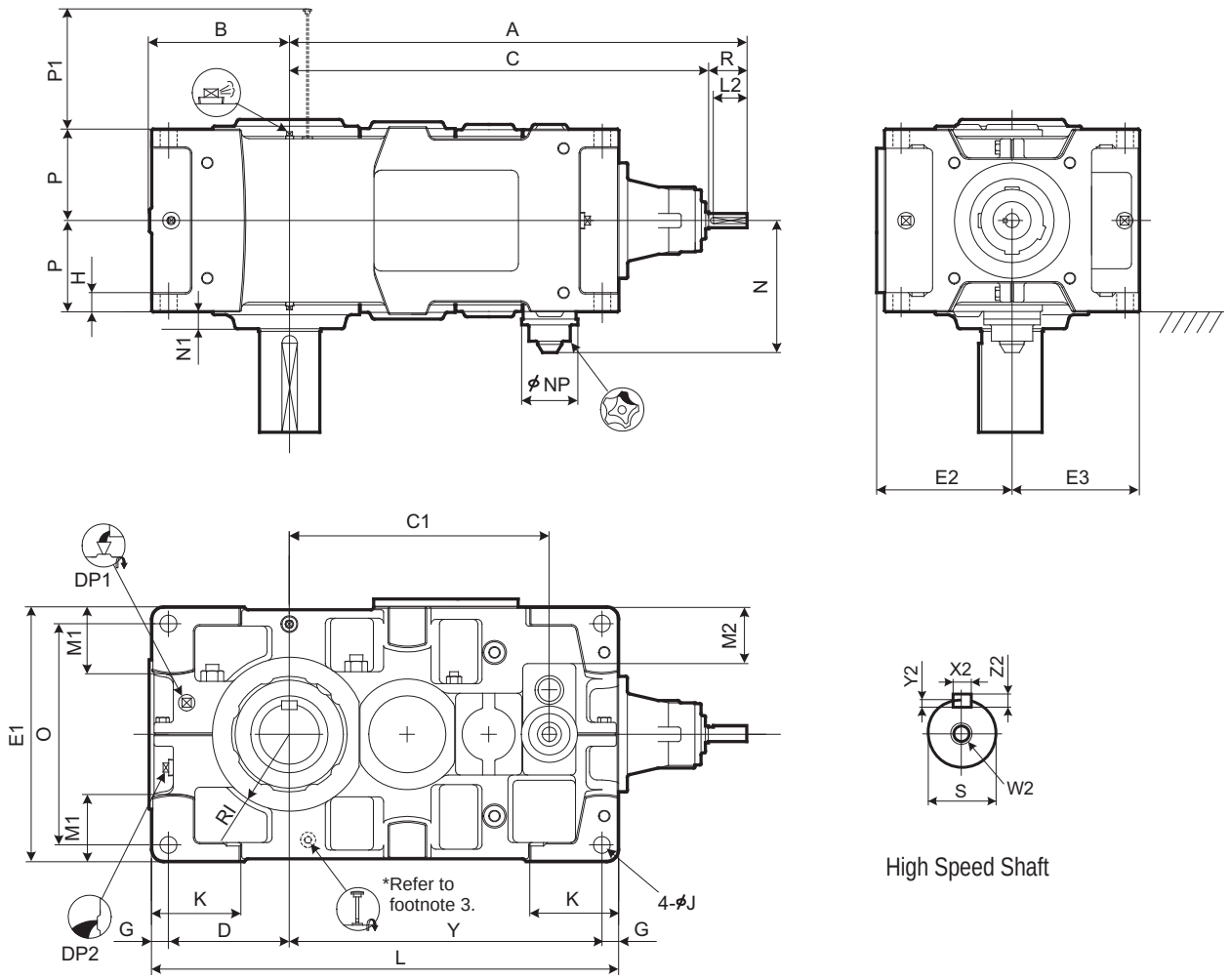

Size	A	B	C	C1	D	E1	E2	E3	G	H	RI	J	K	L	M1	M2	N	N1	NP	O	P	P1	Y
9060	950	299	870	540	251	530	282	265	35	35	160	35	180	970	140	118	277.5	35	117	460	190	203	649
9065	996	338	916	586	290	600	317	300	35	35	175	35	180	1055	175	153	277.5	38	117	530	190	203	695
9070	1080	336	1000	630	283	600	317	300	40	40	175	42	215	1115	155	128	302.5	38	117	520	215	233	752
9075	1133	383	1053	683	330	670	352	335	40	52	190	42	220	1215	195	163	302.5	40	117	590	215	233	805
9080	1250	378	1140	725	325	670	352	335	40	52	190	42	220	1275	170	140	322.5	45	117	590	230	263	870
9085	1306	422	1196	781	369	750	392	375	40	52	215	42	220	1375	210	180	322.5	40	117	670	230	263	926

Size	High Speed Shaft							DP1	DP2	Wt. kg	Oil Qty. L
	R	S	W2/Depth	Key							
				X2	Y2	Z2	L2				
9060	80	30k6	M10/22	8	4	7	70	1"	1"	670	36
9065	80	30k6	M10/22	8	4	7	70	1"	1"	825	45
9070	80	35k6	M12/28	10	5	8	70	1"	1"	960	54
9075	80	35k6	M12/28	10	5	8	70	1"	1"	1180	68
9080	110	45k6	M16/36	14	5.5	9	95	1"	1"	1390	69
9085	110	45k6	M16/36	14	5.5	9	95	1"	1"	1650	94

Unit: mm

1. Key and keyways are based on ISO R773-1969 Close keys (JIS B1301-1996 Parallel key in fastening type)
2. The oil quantity is approximate. Oil shall be supplied within the range shown on the oil gauge.
3. Shaft arrangement LR is equipped with oil gauge. Refer to the page C-28.
4. Refer to the page C-15 for dimensions shown in these drawings.
5. Refer to the page C-28 for the dimension of optional parts.

DIMENSIONS Right Angle Shaft Quadruple Reduction Vertical Mounting 9060 ▶ 9085

Slow Speed Shaft

Solid Shaft	Hollow Shaft (Shrink Disk Type)	Hollow Shaft (Key Type)
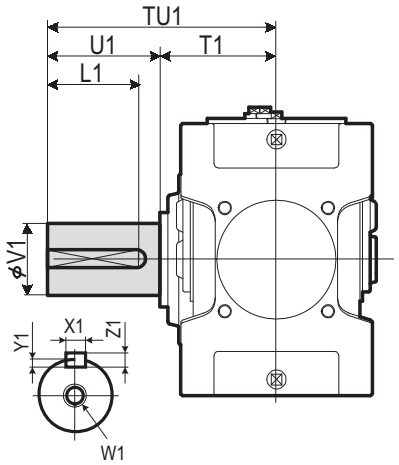	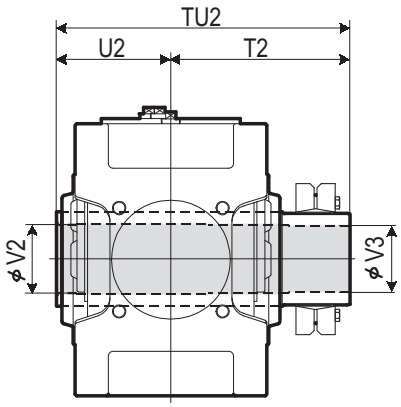 Refer to the page C-18 for details.	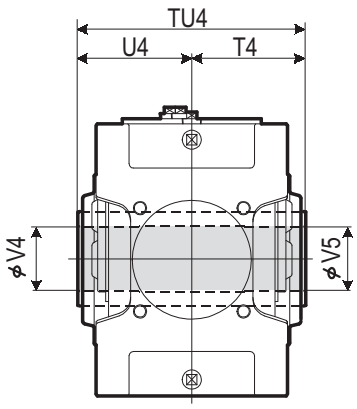 Refer to the page C-18 for details.

Size	Solid Shaft									Hollow Shaft (Shrink Disk Type)					Hollow Shaft (Key Type)				
	TU1	T1	U1	V1	W1/Depth	Key X1	Key Y1	Key Z1	Key L1	TU2	T2	U2	V2	V3	TU4	T4	U4	V4	V5
9060	440	230	210	125m6	M24/50	32	11	18	185	583	353	230	128	125	470	235	235	125	123
9065	484	234	250	140m6	M30/60	36	12	20	225	594	359	235	143	140	480	240	240	145	143
9070	509	259	250	145m6	M30/60	36	12	20	225	644	384	260	148	145	530	265	265	145	143
9075	562	262	300	160m6	M30/60	40	13	22	275	651	386	265	158	155	530	265	265	150	148
9080	582	282	300	165m6	M30/60	40	13	22	275	714	429	285	173	170	570	285	285	165	163
9085	585	285	300	175m6	M30/60	45	15	25	270	714	429	285	183	180	570	285	285	175	173

Unit: mm

Standard Shaft Arrangement Configuration

LR	LL
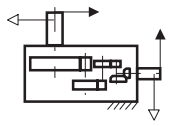	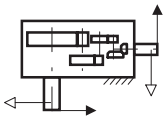

Nomenclature

P V D [ ] R 4 - [ ] [ ] - [ ]

Size: 9060, 9065, 9070, 9075, 9080, 9085

Shaft Arrangement: LR, LL

Low Speed Shaft Type:
- (blank): Solid Shaft
- T : Hollow Shaft (Shrink Disk type)
- K : Hollow Shaft (Key type)

Nominal Reduction Ratio

Size	80	90	100	112	125	140	160	180	200	224	250	280	315	355	400	450
9060		○	○	○	○	○	○	○	○	○	○	○	○	○		
9065				○	○	○	○	○	○	○	○	○	○	○	○	○
9070	○	○	○	○	○	○		○	○	○	○	○	○	○		
9075			○	○	○	○	○	○		○	○	○	○	○	○	○
9080	○	○	○	○	○	○	○	○	○	○	○	○	○	○		
9085			○	○	○	○	○	○	○	○	○	○	○	○	○	○

Air Breather, Air Vent, Oil Fill, Drain Plug, Dip Stick, Oil Gauge, Inspection Cover, Oil Pump, Backstop (Option), Opposite Side

DIMENSIONS Right Angle Shaft Quadruple Reduction Vertical Mounting 9090 ▶ 9115

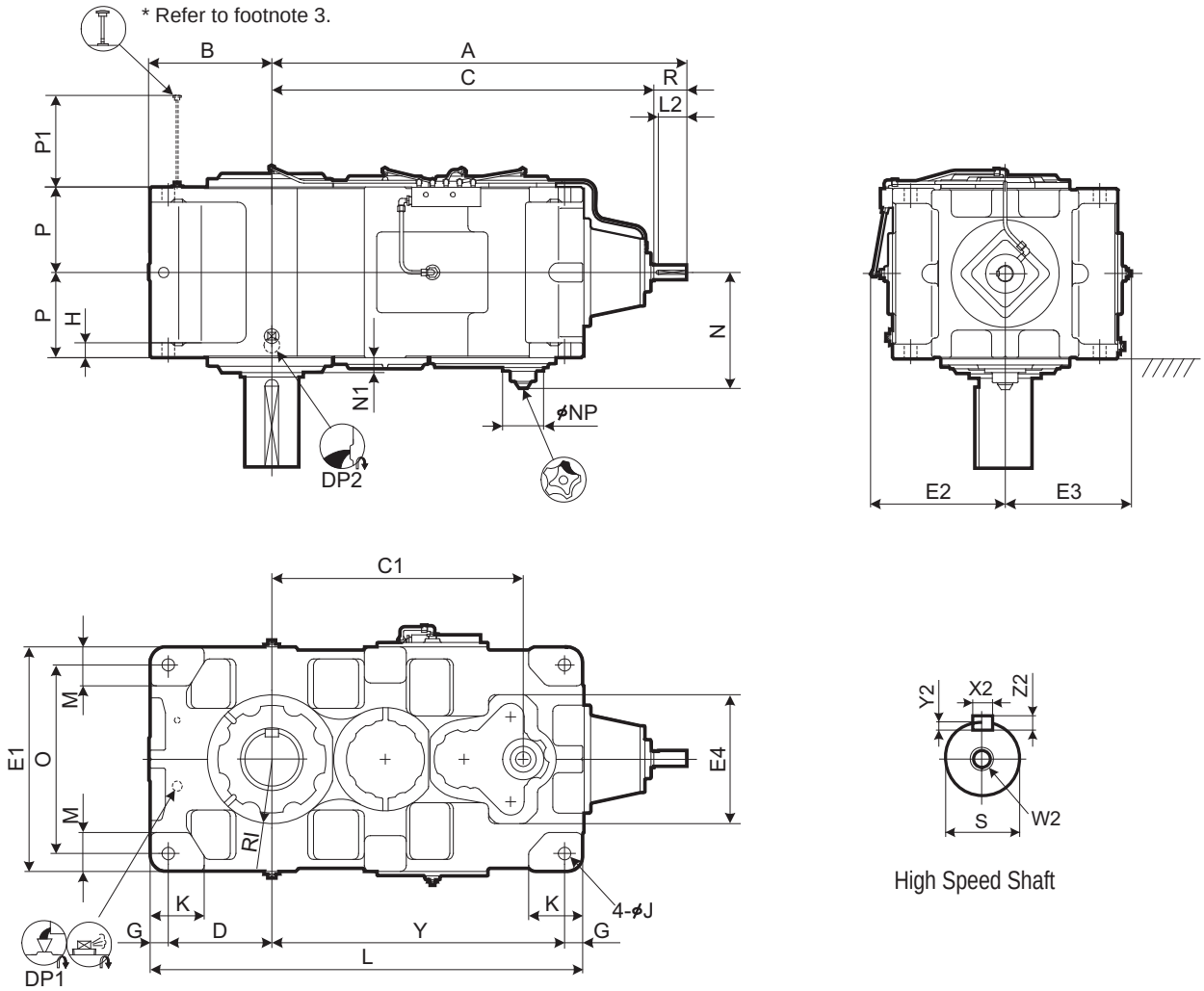

Size	A	B	C	C1	D	E1	E2	E3	E4	G	H	RI	J	K	L	M	N	N1	NP	O	P	P1	Y
9090	1382	410	1272	837	345	750	449	421	430	60	50	215	42	180	1440	130	381	50	137	630	285	354	975
9095	1412	440	1302	867	375	800	474	446	430	60	50	235	42	200	1500	140	381	50	137	680	285	354	1005
9100	1570	450	1430	950	375	850	499	471	500	70	55	235	48	200	1610	150	421	60	137	710	325	399	1095
9105	1604	485	1464	984	410	900	524	496	500	70	55	260	48	220	1680	160	421	60	137	760	325	399	1130
9110	1670	500	1530	1050	420	950	559	521	500	75	60	265	56	220	1810	170	451	55	137	800	355	429	1240
9115	1719	550	1579	1099	470	1000	584	546	500	75	60	280	56	250	1910	180	451	55	137	850	355	429	1290

Size	High Speed Shaft							DP1	DP2	Wt. kg	Oil Qty. L
	R	S	W2/Depth	Key							
				X2	Y2	Z2	L2				
9090	110	50k6	M16/36	14	5.5	9	95	1"	1 1/2"	2170	120
9095	110	50k6	M16/36	14	5.5	9	95	1"	1 1/2"	2430	155
9100	140	60m6	M20/42	18	7	11	125	1"	1 1/2"	2970	180
9105	140	60m6	M20/42	18	7	11	125	1"	1 1/2"	3450	220
9110	140	60m6	M20/42	18	7	11	125	1"	1 1/2"	4100	250
9115	140	60m6	M20/42	18	7	11	125	1"	1 1/2"	4620	315

Unit: mm

1. Key and keyways are based on ISO R773-1969 Close keys (JIS B1301-1996 Parallel key in fastening type)
2. The oil quantity is approximate. Oil shall be supplied within the range shown on the oil gauge.
3. Shaft arrangement LR is equipped with oil gauge. Refer to the page C-31.
4. Refer to the page C-16 for dimensions shown in these drawings.
5. Refer to the page C-31 for the dimension of optional parts.

DIMENSIONS Right Angle Shaft Quadruple Reduction Vertical Mounting 9090 ▶ 9115

Slow Speed Shaft

Solid Shaft	Hollow Shaft (Shrink Disk Type)
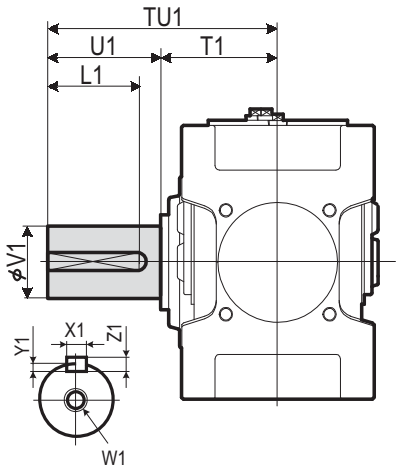	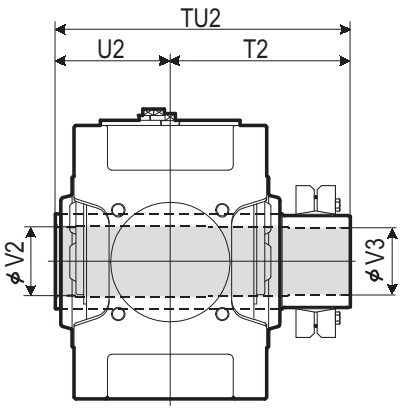 Refer to the page C-18 for details.

Size	Solid Shaft									Hollow Shaft (Shrink Disk Type)				
	TU1	T1	U1	V1	W1/Depth	Key X1	Key Y1	Key Z1	Key L1	TU2	T2	U2	V2	V3
9090	650	350	300	180m6	M30/60	45	15	25	270	844	494	350	193	190
9095	700	350	350	190m6	M30/60	45	15	25	320	859	509	350	203	200
9100	740	390	350	200m6	M30/60	45	15	25	320	934	544	390	213	210
9105	740	390	350	220m6	M30/60	50	17	28	320	949	559	390	223	220
9110	770	420	350	220m6	M30/60	50	17	28	320	1030	610	420	243	240
9115	830	420	410	240m6	M30/60	56	20	32	375	1065	645	420	253	250

Unit: mm

Standard Shaft Arrangement Configuration

LR	LL
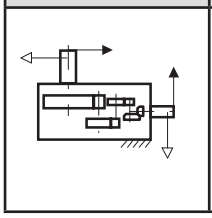	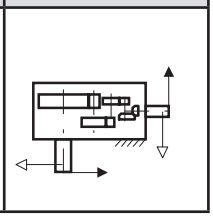

Nomenclature

P V D [ ] R 4 - [ ] [ ] - [ ]

Size: 9090, 9095, 9100, 9105, 9110, 9115

Shaft Arrangement: LR, LL

Low Speed Shaft Type: (blank): Solid Shaft; T: Hollow Shaft (Shrink Disk type)

Nominal Reduction Ratio

Size	Nominal Reduction Ratio 90	100	112	125	140	160	180	200	224	250	280	315	355	400
9090	○	○	○	○	○	○	○	○	○	○	○	○	○	
9095		○	○	○	○	○	○	○	○	○	○	○	○	○
9100	○	○	○	○	○	○	○	○	○	○	○	○	○	
9105		○	○	○	○	○	○	○	○	○	○	○	○	○
9110	○	○	○	○	○	○	○	○	○	○	○	○	○	
9115		○	○	○	○	○	○	○	○	○	○	○	○	○

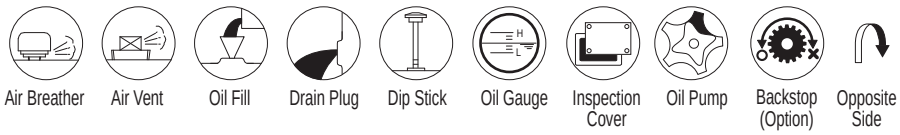

Air Breather, Air Vent, Oil Fill, Drain Plug, Dip Stick, Oil Gauge, Inspection Cover, Oil Pump, Backstop (Option), Opposite Side

DIMENSIONS Right Angle Shaft Double Reduction Upright Mounting 9015 ▶ 9055

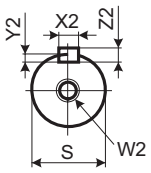

High Speed Shaft

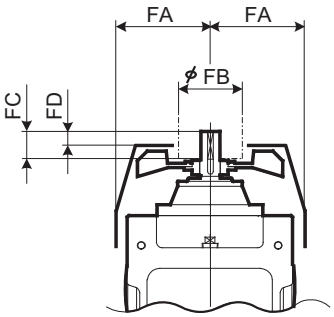

With Fan

Refer to the page C-20 for details.

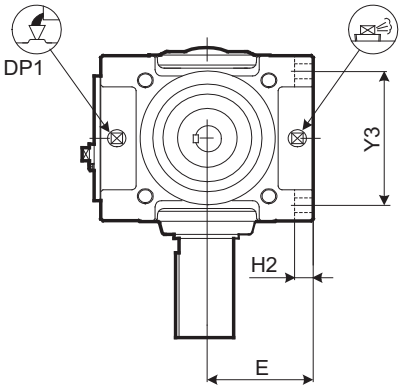

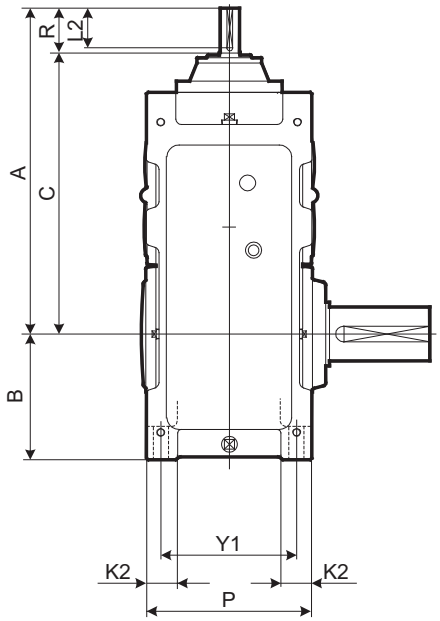

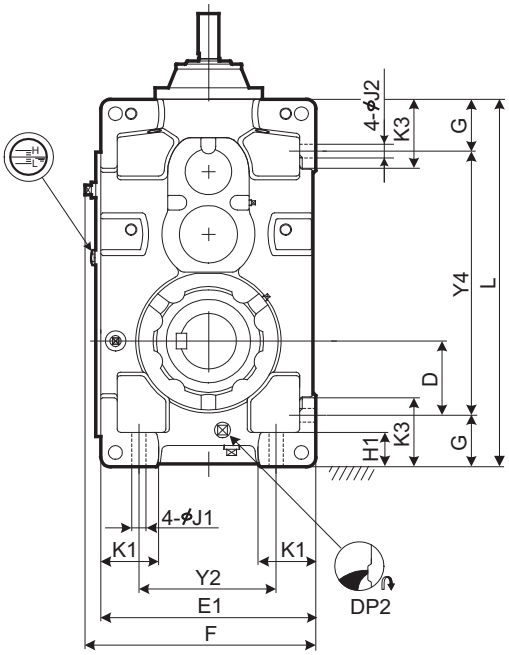

Size	A	B	C	D	E	E1	F	G	H1	H2	J1	J2	K1	K2	K3	L	P	Y1	Y2	Y3	Y4
9015	507	160	427	90	135	270	298	70	50	22	15	15	70	35	95	440	205	170	180	170	300
9025	545	175	465	95	155	310	338	80	55	25	19	19	75	40	110	505	235	195	210	195	345
9030	645	200	535	110	160	320	348	90	60	28	24	24	85	50	120	590	265	215	200	215	410
9035	676	219	566	129	185	370	398	90	60	28	24	24	100	50	120	640	265	215	250	215	460
9040	705	235	595	120	200	400	430	115	75	30	28	28	100	60	150	685	315	255	260	255	455
9045	744	256	634	141	220	440	470	115	75	30	28	28	120	60	150	745	315	255	300	255	515
9050	755	255	645	138.5	210	420	450	116.5	75	32	28	28	110	60	150	775	345	285	280	285	542
9055	794	286	684	171	245	490	520	115	75	32	28	28	135	60	150	845	345	285	350	285	615

Size	High Speed Shaft							Fan				DP1	DP2	Wt. kg	Oil Qty. L
	R	S	W2/Depth	Key				FA	FB	FC	FD				
				X2	Y2	Z2	L2								
9015	80	28k6	M12/28	8	4	7	70	125	125	50	30	3/4"	3/4"	95	7
9025	80	35k6	M12/28	10	5	8	70	135	140	50	30	3/4"	3/4"	140	11
9030	110	40k6	M16/36	14	5.5	9	95	150	140	80	52	3/4"	3/4"	205	14
9035	110	40k6	M16/36	14	5.5	9	95	150	140	80	52	3/4"	3/4"	225	19
9040	110	45k6	M16/36	14	5.5	9	95	170	160	80	52	1"	1"	305	24
9045	110	45k6	M16/36	14	5.5	9	95	170	160	80	52	1"	1"	365	30
9050	110	50k6	M16/36	14	5.5	9	95	190	160	80	52	1"	1"	435	31
9055	110	50k6	M16/36	14	5.5	9	95	190	160	80	52	1"	1"	495	45

Unit: mm

1. Key and keyways are based on ISO R773-1969 Close keys (JIS B1301-1996 Parallel key in fastening type)
2. The oil quantity is approximate. Oil shall be supplied within the range shown on the oil gauge.
3. Refer to the page C-12 for dimensions shown in these drawings.
4. Refer to the page C-26 for the dimension of optional parts.

DIMENSIONS Right Angle Shaft Double Reduction Upright Mounting 9015 ▶ 9055

Slow Speed Shaft

Solid Shaft	Hollow Shaft (Shrink Disk Type)	Hollow Shaft (Key Type)
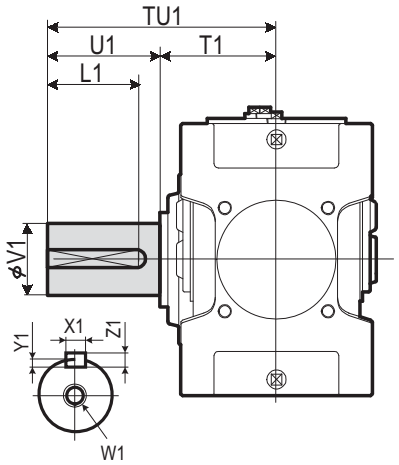	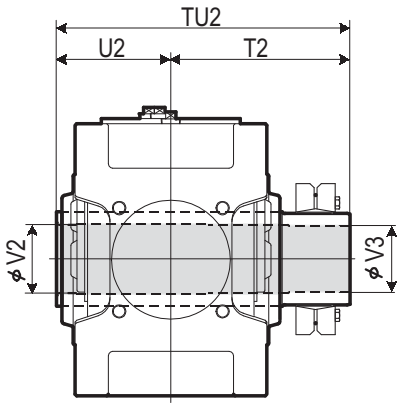 Refer to the page C-18 for details.	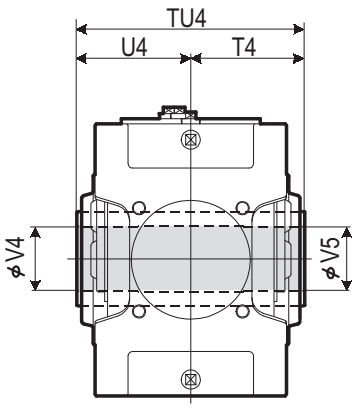 Refer to the page C-18 for details.

Size	Solid Shaft									Hollow Shaft (Shrink Disk Type)					Hollow Shaft (Key Type)				
	TU1	T1	U1	V1	W1/Depth	Key X1	Key Y1	Key Z1	Key L1	TU2	T2	U2	V2	V3	TU4	T4	U4	V4	V5
9015	245	135	110	58m6	M20/42	18	7	11	95	328	193	135	63	60	270	135	135	55	55
9025	285	145	140	70m6	M20/42	20	7.5	12	125	358	213	145	73	70	300	150	150	65	65
9030	330	160	170	80m6	M20/42	22	9	14	150	393	233	160	83	80	330	165	165	75	75
9035	330	160	170	90m6	M20/42	25	9	14	150	403	243	160	88	85	330	165	165	85	85
9040	349	179	170	95m6	M24/50	25	9	14	150	448	268	180	98	95	360	180	180	90	90
9045	391	181	210	105m6	M24/50	28	10	16	190	463	283	180	108	105	370	185	185	105	105
9050	411	201	210	110m6	M24/50	28	10	16	190	503	303	200	108	105	410	205	205	105	105
9055	411	201	210	120m6	M24/50	32	11	18	185	528	323	205	123	120	410	205	205	115	115

Unit: mm

Standard Shaft Arrangement Configuration

RL	RR	RB	LR	LL	LB
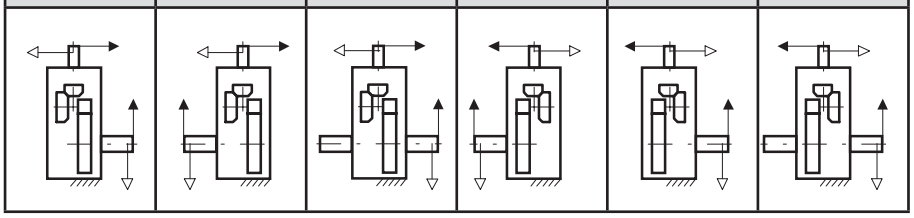					

Nomenclature

P W A [Size] R 2 - [Shaft Arrangement] [Low Speed Shaft Type] [Fan] - [Nominal Reduction Ratio]

Size: 9015, 9025, 9030, 9035, 9040, 9045, 9050, 9055

Shaft Arrangement: RL, RR, RB, LR, LL, LB

Low Speed Shaft Type:
- (blank) : Solid Shaft
- T : Hollow Shaft (Shrink Disk type)
- K : Hollow Shaft (Key type)

Fan:
- (blank) : Without Fan
- F : With Fan

Size	Nominal Reduction Ratio 6.3	7.1	8	9	10	11.2	12.5	14	16	18	20	22.4
9015	○	○	○	○	○	○	○	○	○	○		
9025	○	○	○	○	○	○	○	○	○	○		
9030	○	○	○	○	○	○	○	○	○	○		
9035			○	○	○	○	○	○	○	○	○	○
9040	○	○	○	○	○	○	○	○	○	○		
9045			○	○	○	○	○	○	○	○	○	○
9050	○	○	○	○	○	○	○	○	○	○		
9055				○	○	○	○	○	○	○	○	○

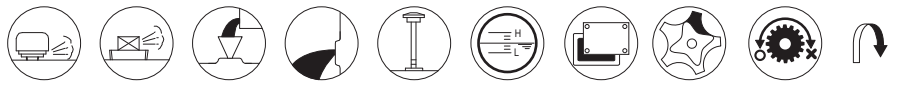

Air Breather | Air Vent | Oil Fill | Drain Plug | Dip Stick | Oil Gauge | Inspection Cover | Oil Pump | Backstop (Option) | Opposite Side

DIMENSIONS Right Angle Shaft Double Reduction Upright Mounting 9060 ▶ 9085

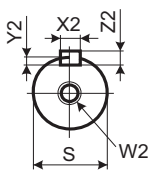

High Speed Shaft

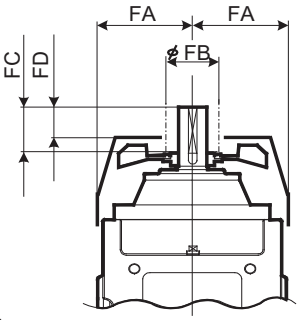

With Fan

Refer to the page C-20 for details.

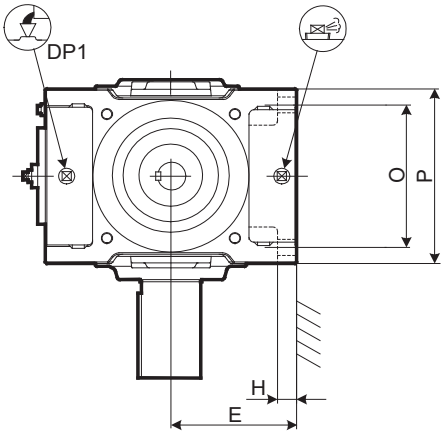

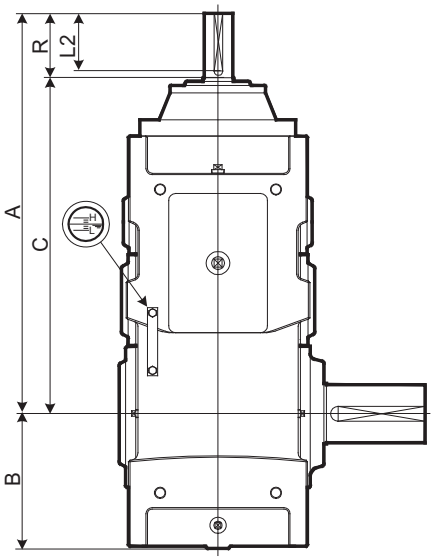

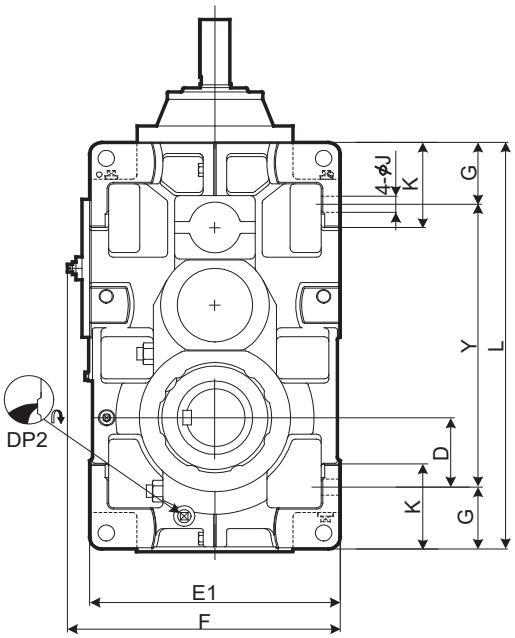

Size	A	B	C	D	E	E1	F	G	H	J	K	L	O	P	Y
9060	865	299	725	151	265	530	577	135	35	35	180	885	310	380	615
9065	911	338	771	190	300	600	647	135	35	35	180	970	310	380	700
9070	965	336	825	163	300	600	647	160	40	42	215	1020	350	430	700
9075	1018	383	878	210	335	670	717	160	52	42	220	1120	350	430	800
9080	1080	378	940	205	335	670	717	160	52	42	220	1155	380	460	835
9085	1136	422	996	249	375	750	797	160	52	42	220	1255	380	460	935

Size	High Speed Shaft							Fan				DP1	DP2	Wt. kg	Oil Qty. L
	R	S	W2/Depth	Key				FA	FB	FC	FD				
				X2	Y2	Z2	L2								
9060	140	60m6	M20/42	18	7	11	125	220	160	105	65	1"	1"	600	44
9065	140	60m6	M20/42	18	7	11	125	220	160	105	65	1"	1"	725	56
9070	140	65m6	M20/42	18	7	11	125	245	200	105	65	1"	1"	920	65
9075	140	65m6	M20/42	18	7	11	125	245	200	105	65	1"	1"	1170	87
9080	140	75m6	M20/42	20	7.5	12	125	270	225	105	60	1"	1"	1300	90
9085	140	75m6	M20/42	20	7.5	12	125	270	225	105	60	1"	1"	1560	126

Unit: mm

1. Key and keyways are based on ISO R773-1969 Close keys (JIS B1301-1996 Parallel key in fastening type)
2. The oil quantity is approximate. Oil shall be supplied within the range shown on the oil gauge.
3. Refer to the page C-14 for dimensions shown in these drawings.
4. Refer to the page C-29 for the dimension of optional parts.

DIMENSIONS Right Angle Shaft Double Reduction Upright Mounting 9060 ▶ 9085

Slow Speed Shaft

Solid Shaft	Hollow Shaft (Shrink Disk Type)	Hollow Shaft (Key Type)
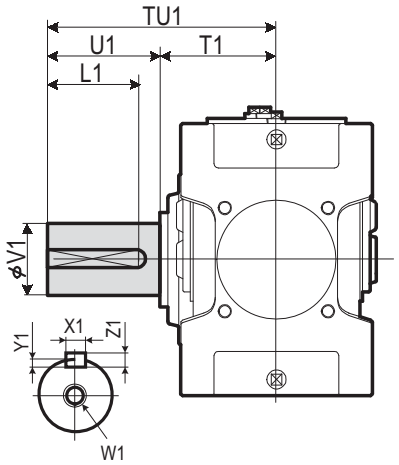	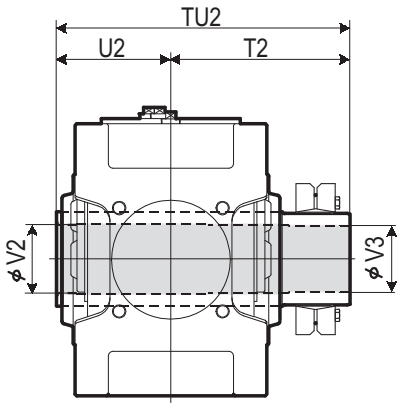 Refer to the page C-18 for details.	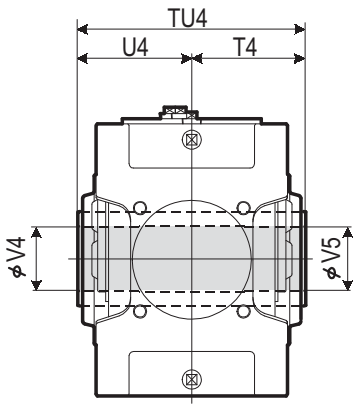 Refer to the page C-18 for details.

Size	Solid Shaft									Hollow Shaft (Shrink Disk Type)					Hollow Shaft (Key Type)				
	TU1	T1	U1	V1	W1/Depth	Key X1	Key Y1	Key Z1	Key L1	TU2	T2	U2	V2	V3	TU4	T4	U4	V4	V5
9060	440	230	210	125m6	M24/50	32	11	18	185	583	353	230	128	125	470	235	235	125	123
9065	484	234	250	140m6	M30/60	36	12	20	225	594	359	235	143	140	480	240	240	145	143
9070	509	259	250	145m6	M30/60	36	12	20	225	644	384	260	148	145	530	265	265	145	143
9075	562	262	300	160m6	M30/60	40	13	22	275	651	386	265	158	155	530	265	265	150	148
9080	582	282	300	165m6	M30/60	40	13	22	275	714	429	285	173	170	570	285	285	165	163
9085	585	285	300	175m6	M30/60	45	15	25	270	714	429	285	183	180	570	285	285	175	173

Unit: mm

Standard Shaft Arrangement Configuration

RL	RR	RB	LR	LL	LB
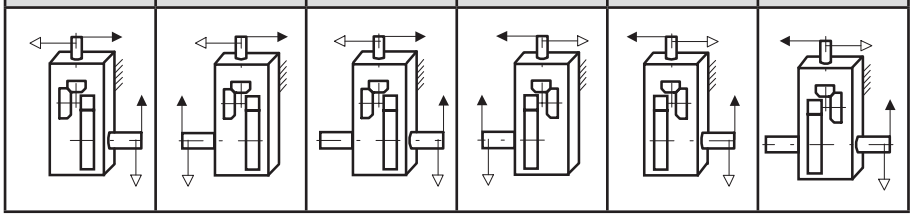					

Nomenclature

P W D [ ] R 2 W - [ ] [ ] [ ] - [ ]

Size: 9060, 9065, 9070, 9075, 9080, 9085

Shaft Arrangement: RL, RR, RB, LR, LL, LB

Low Speed Shaft Type:
- (blank): Solid Shaft
- T : Hollow Shaft (Shrink Disk type)
- K : Hollow Shaft (Key type)

Fan:
- (blank) : Without Fan
- F : With Fan

Nominal Reduction Ratio

Size	6.3	7.1	8	9	10	11.2	12.5	14	16	18	20	22.4
9060	○	○	○	○	○	○	○	○	○	○		
9065				○	○	○	○	○	○	○	○	○
9070	○	○	○	○	○	○	○	○	○	○		
9075				○	○	○	○	○	○	○	○	○
9080	○	○	○	○	○	○	○	○	○	○		
9085					○	○	○	○	○	○	○	○

Air Breather, Air Vent, Oil Fill, Drain Plug, Dip Stick, Oil Gauge, Inspection Cover, Oil Pump, Backstop (Option), Opposite Side

DIMENSIONS Right Angle Shaft Triple Reduction Upright Mounting 9030 ▶ 9055

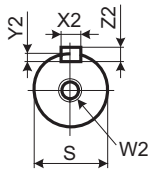

High Speed Shaft

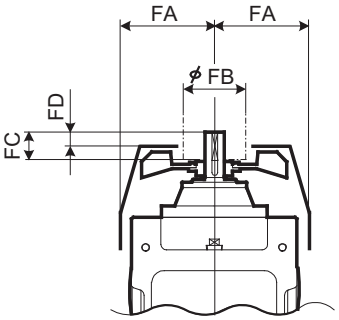

With Fan

Refer to the page C-21 for details.

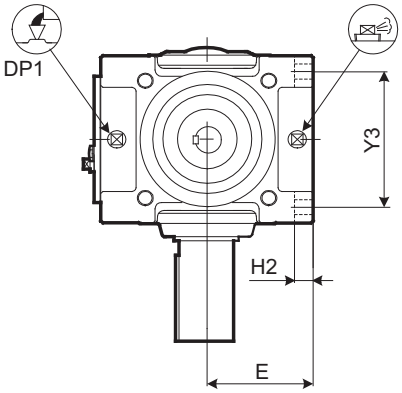

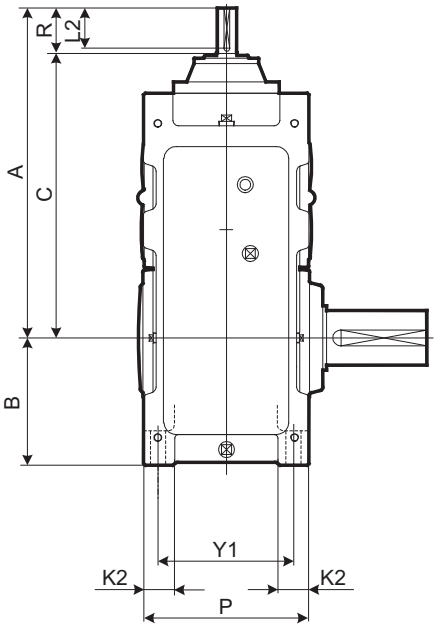

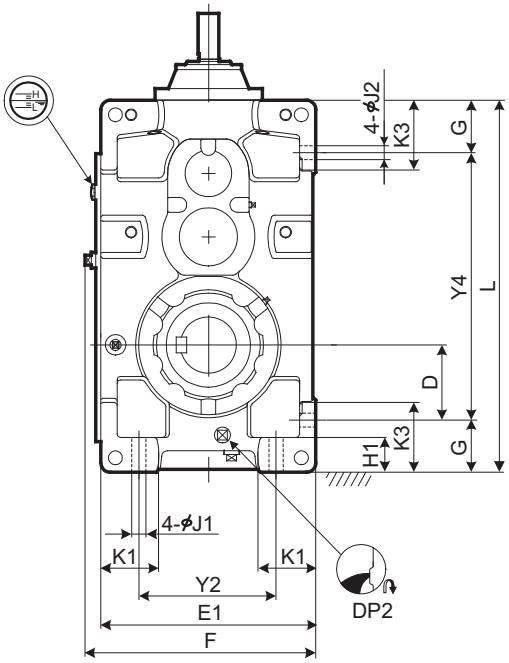

Size	A	B	C	D	E	E1	F	G	H1	H2	J1	J2	K1	K2	K3	L	P	Y1	Y2	Y3	Y4
9030	656	200	576	110	160	320	348	90	60	28	24	24	85	50	120	590	265	215	200	215	410
9035	687	219	607	129	185	370	398	90	60	28	24	24	100	50	120	640	265	215	250	215	460
9040	716	235	636	120	200	400	430	115	75	30	28	28	100	60	150	685	315	255	260	255	455
9045	755	256	675	141	220	440	470	115	75	30	28	28	120	60	150	745	315	255	300	255	515
9050	808	255	728	138.5	210	420	450	116.5	75	32	28	28	110	60	150	775	345	285	280	285	542
9055	847	286	767	171	245	490	520	115	75	32	28	28	135	60	150	845	345	285	350	285	615

Size	High Speed Shaft							Fan				DP1	DP2	Wt. kg	Oil Qty. L
	R	S	W2/Depth	Key				FA	FB	FC	FD				
				X2	Y2	Z2	L2								
9030	80	28k6	M10/22	8	4	7	70	150	125	50	30	3/4"	3/4"	210	16
9035	80	28k6	M10/22	8	4	7	70	150	125	50	30	3/4"	3/4"	230	21
9040	80	30k6	M10/22	8	4	7	70	170	125	50	30	1"	1"	305	29
9045	80	30k6	M10/22	8	4	7	70	170	125	50	30	1"	1"	365	36
9050	80	35k6	M12/28	10	5	8	70	190	140	50	22	1"	1"	445	35
9055	80	35k6	M12/28	10	5	8	70	190	140	50	22	1"	1"	505	46

Unit: mm

1. Key and keyways are based on ISO R773-1969 Close keys (JIS B1301-1996 Parallel key in fastening type)
2. The oil quantity is approximate. Oil shall be supplied within the range shown on the oil gauge.
3. Refer to the page C-12 for dimensions shown in these drawings.
4. Refer to the page C-26 for the dimension of optional parts.

DIMENSIONS Right Angle Shaft Triple Reduction Upright Mounting 9030 ▶ 9055

Slow Speed Shaft

Solid Shaft	Hollow Shaft (Shrink Disk Type)	Hollow Shaft (Key Type)
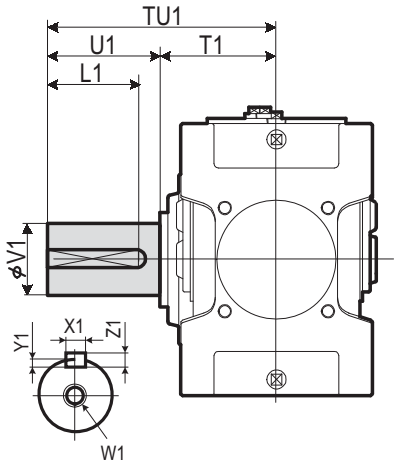	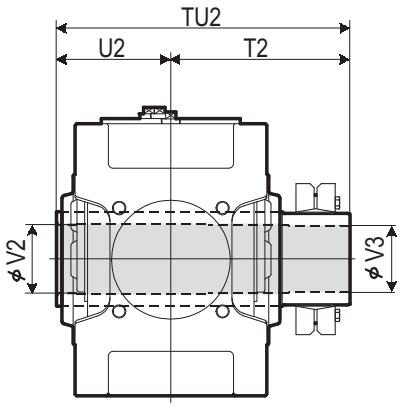 Refer to the page C-18 for details.	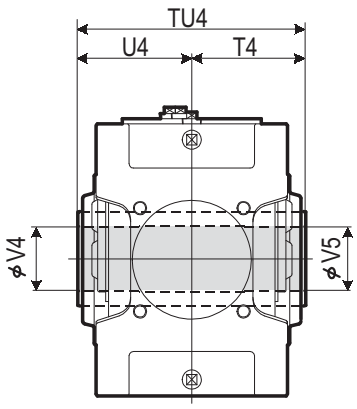 Refer to the page C-18 for details.

Size	Solid Shaft									Hollow Shaft (Shrink Disk Type)					Hollow Shaft (Key Type)				
	TU1	T1	U1	V1	W1/Depth	Key X1	Key Y1	Key Z1	Key L1	TU2	T2	U2	V2	V3	TU4	T4	U4	V4	V5
9030	330	160	170	80m6	M20/42	22	9	14	150	393	233	160	83	80	330	165	165	75	75
9035	330	160	170	90m6	M20/42	25	9	14	150	403	243	160	88	85	330	165	165	85	85
9040	349	179	170	95m6	M24/50	25	9	14	150	448	268	180	98	95	360	180	180	90	90
9045	391	181	210	105m6	M24/50	28	10	16	190	463	283	180	108	105	370	185	185	105	105
9050	411	201	210	110m6	M24/50	28	10	16	190	503	303	200	108	105	410	205	205	105	105
9055	411	201	210	120m6	M24/50	32	11	18	185	528	323	205	123	120	410	205	205	115	115

Unit: mm

Standard Shaft Arrangement Configuration

RL	RR	RB	LR	LL	LB
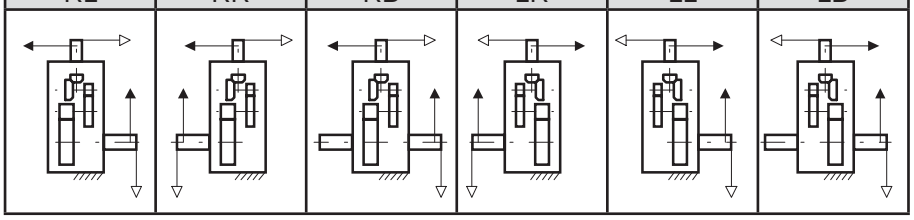					

Nomenclature

P W A [Size] R 3 - [Shaft Arrangement] [Low Speed Shaft Type] [Fan] - [Nominal Reduction Ratio]

Size: 9030, 9035, 9040, 9045, 9050, 9055

Shaft Arrangement: RL, RR, RB, LR, LL, LB

Low Speed Shaft Type:
- (blank) : Solid Shaft
- T : Hollow Shaft (Shrink Disk type)
- K : Hollow Shaft (Key type)

Fan:
- (blank) : Without Fan
- F : With Fan

Size	Nominal Reduction Ratio 20	22.4	25	28	31.5	35.5	40	45	50	56	63	71	80	90
9030	○	○	○	○	○	○	○	○	○	○	○	○		
9035			○	○	○	○	○	○	○	○		○	○	○
9040	○	○	○	○	○	○	○	○		○	○	○		
9045				○	○	○	○	○	○	○		○	○	○
9050	○	○	○	○	○	○	○	○	○	○	○	○		
9055			○	○	○	○	○	○	○	○	○	○	○	○

Air Breather, Air Vent, Oil Fill, Drain Plug, Dip Stick, Oil Gauge, Inspection Cover, Oil Pump, Backstop (Option), Opposite Side

DIMENSIONS Right Angle Shaft Triple Reduction Upright Mounting 9060 ▶ 9085

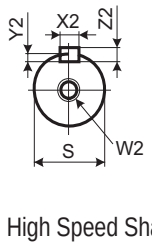

High Speed Shaft

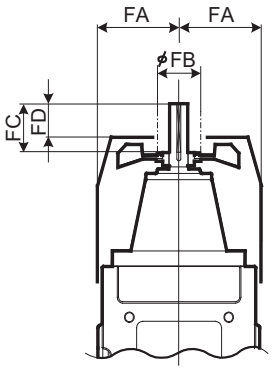

With Fan

Refer to the page C-21 for details.

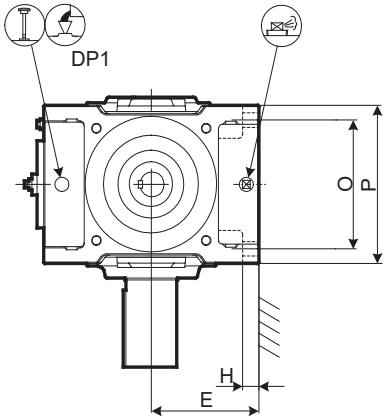

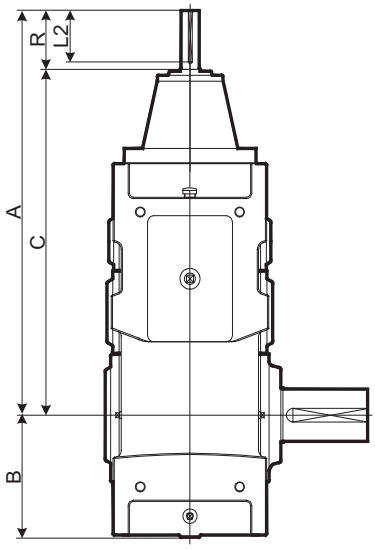

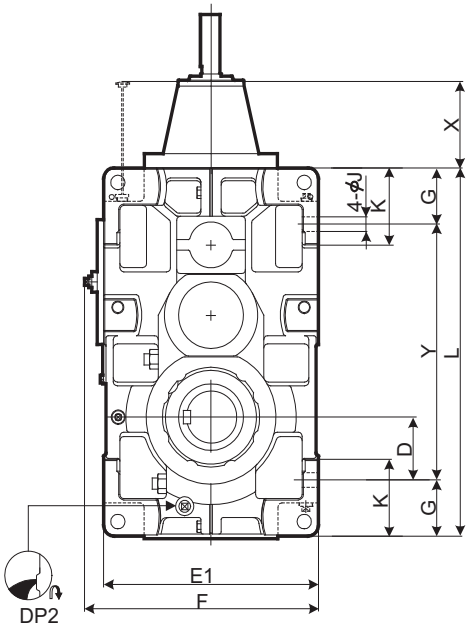

Size	A	B	C	D	E	E1	F	G	H	J	K	L	O	P	X	Y
9060	939	299	829	151	265	530	577	135	35	35	180	885	310	380	131	615
9065	985	338	875	190	300	600	647	135	35	35	180	970	310	380	131	700
9070	1027	336	917	163	300	600	647	160	40	42	215	1020	350	430	138	700
9075	1080	383	970	210	335	670	717	160	52	42	220	1120	350	430	138	800
9080	1176	378	1036	205	335	670	717	160	52	42	220	1155	380	460	165	835
9085	1232	422	1092	249	375	750	797	160	52	42	220	1255	380	460	165	935

Size	High Speed Shaft							Fan				DP1	DP2	Wt. kg	Oil Qty. L
	R	S	W2/Depth	Key				FA	FB	FC	FD				
				X2	Y2	Z2	L2								
9060	110	45k6	M16/36	14	5.5	9	95	220	160	80	52	1"	1"	660	56
9065	110	45k6	M16/36	14	5.5	9	95	220	160	80	52	1"	1"	785	65
9070	110	50k6	M16/36	14	5.5	9	95	245	160	80	52	1"	1"	940	83
9075	110	50k6	M16/36	14	5.5	9	95	245	160	80	52	1"	1"	1190	100
9080	140	60m6	M20/42	18	7	11	125	270	160	105	65	1"	1"	1350	115
9085	140	60m6	M20/42	18	7	11	125	270	160	105	65	1"	1"	1610	144

Unit: mm

1. Key and keyways are based on ISO R773-1969 Close keys (JIS B1301-1996 Parallel key in fastening type)
2. The oil quantity is approximate. Oil shall be supplied within the range shown on the oil gauge.
3. Refer to the page C-14 for dimensions shown in these drawings.
4. Refer to the page C-29 for the dimension of optional parts.

DIMENSIONS Right Angle Shaft Triple Reduction Upright Mounting 9060 ▶ 9085

Slow Speed Shaft

Solid Shaft	Hollow Shaft (Shrink Disk Type)	Hollow Shaft (Key Type)
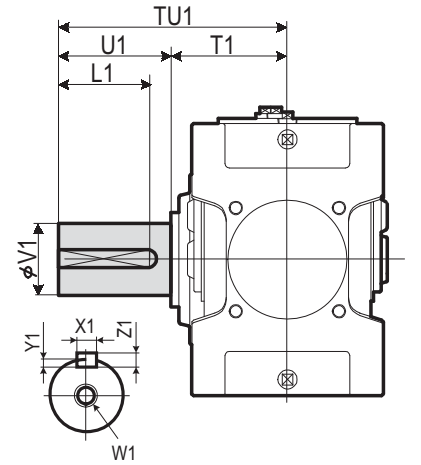	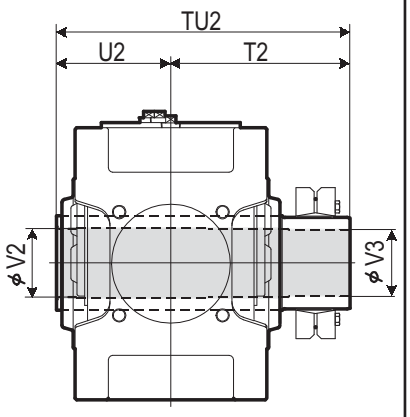 Refer to the page C-18 for details.	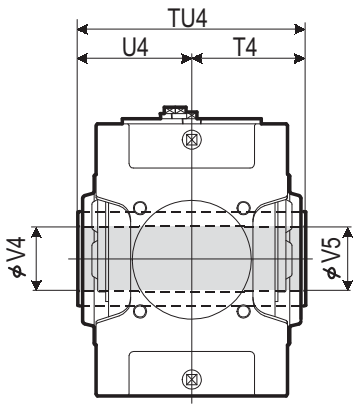 Refer to the page C-18 for details.

Size	Solid Shaft									Hollow Shaft (Shrink Disk Type)					Hollow Shaft (Key Type)				
	TU1	T1	U1	V1	W1/Depth	Key X1	Y1	Z1	L1	TU2	T2	U2	V2	V3	TU4	T4	U4	V4	V5
9060	440	230	210	125m6	M24/50	32	11	18	185	583	353	230	128	125	470	235	235	125	123
9065	484	234	250	140m6	M30/60	36	12	20	225	594	359	235	143	140	480	240	240	145	143
9070	509	259	250	145m6	M30/60	36	12	20	225	644	384	260	148	145	530	265	265	145	143
9075	562	262	300	160m6	M30/60	40	13	22	275	651	386	265	158	155	530	265	265	150	148
9080	582	282	300	165m6	M30/60	40	13	22	275	714	429	285	173	170	570	285	285	165	163
9085	585	285	300	175m6	M30/60	45	15	25	270	714	429	285	183	180	570	285	285	175	173

Unit: mm

Standard Shaft Arrangement Configuration

RL	RR	RB	LR	LL	LB
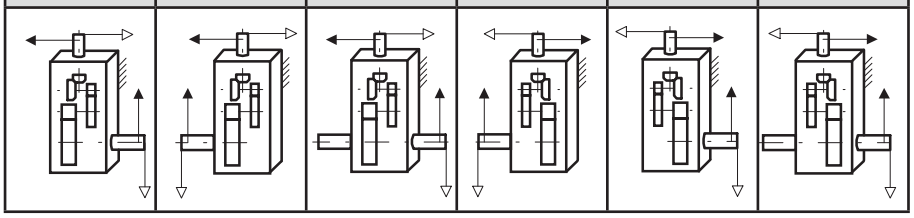					

Nomenclature

P W D [ ] R 3 W - [ ] [ ] [ ] - [ ]

Size: 9060, 9065, 9070, 9075, 9080, 9085

Shaft Arrangement: RL, RR, RB, LR, LL, LB

Low Speed Shaft Type: (blank) :Solid Shaft; T : Hollow Shaft (Shrink Disk type); K : Hollow Shaft (Key type)

Fan: (blank) : Without Fan; F : With Fan

Nominal Reduction Ratio

Size	20	22.4	25	28	31.5	35.5	40	45	50	56	63	71	80	90
9060	○	○	○	○	○	○	○	○	○	○	○	○		
9065				○	○	○	○	○	○	○	○	○	○	○
9070	○	○	○	○	○	○	○	○	○	○	○	○		
9075				○	○	○	○	○	○	○	○	○	○	○
9080	○	○	○	○	○	○	○	○	○	○	○	○		
9085			○	○	○	○	○	○	○	○	○	○	○	○

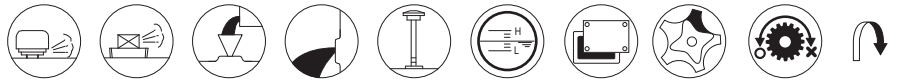

Air Breather, Air Vent, Oil Fill, Drain Plug, Dip Stick, Oil Gauge, Inspection Cover, Oil Pump, Backstop (Option), Opposite Side

DIMENSIONS Right Angle Shaft Quadruple Reduction Upright Mounting 9040 ▶ 9055

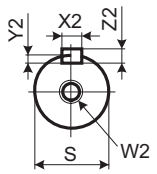

High Speed Shaft

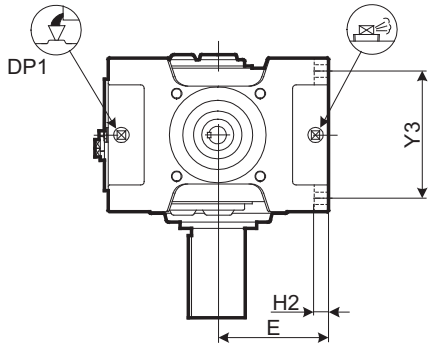

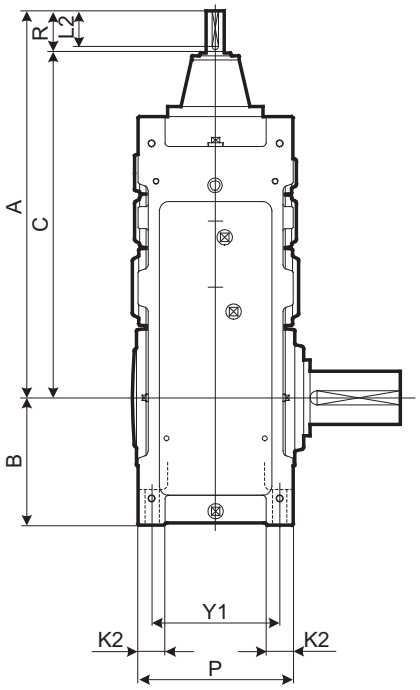

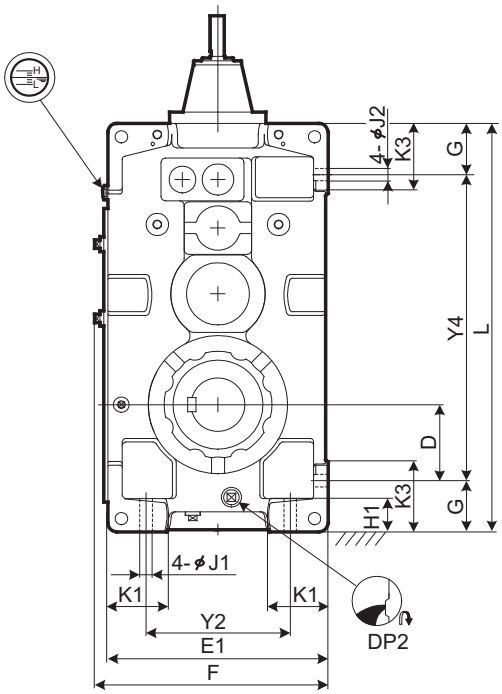

Size	A	B	C	D	E	E1	F	G	H1	H2	J1	J2	K1	K2	K3	L	P	Y1	Y2	Y3	Y4
9040	790	235	710	120	200	400	430	115	75	30	28	28	100	60	150	759	315	255	260	255	529
9045	829	256	749	141	220	440	470	115	75	30	28	28	120	60	150	819	315	255	300	255	589
9050	859	255	779	138.5	210	420	450	116.5	75	32	28	28	110	60	150	848	345	285	280	285	615
9055	898	286	818	171	245	490	520	115	75	32	28	28	135	60	150	918	345	285	350	285	688

Size	High Speed Shaft							DP1	DP2	Wt. kg	Oil Qty. L
	R	S	W2/Depth	Key							
				X2	Y2	Z2	L2				
9040	80	28k6	M10/22	8	4	7	70	1"	1"	325	35
9045	80	28k6	M10/22	8	4	7	70	1"	1"	395	43
9050	80	28k6	M10/22	8	4	7	70	1"	1"	460	46
9055	80	28k6	M10/22	8	4	7	70	1"	1"	520	59

Unit: mm

1. Key and keyways are based on ISO R773-1969 Close keys (JIS B1301-1996 Parallel key in fastening type)
2. The oil quantity is approximate. Oil shall be supplied within the range shown on the oil gauge.
3. Refer to the page C-13 for dimensions shown in these drawings.
4. Refer to the page C-26 for the dimension of optional parts.

DIMENSIONS Right Angle Shaft Quadruple Reduction Upright Mounting 9040 ▶ 9055

Slow Speed Shaft

Solid Shaft	Hollow Shaft (Shrink Disk Type)	Hollow Shaft (Key Type)
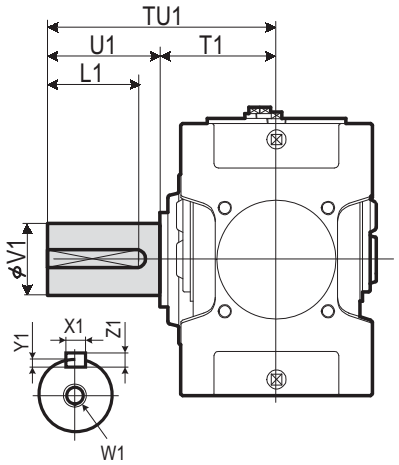	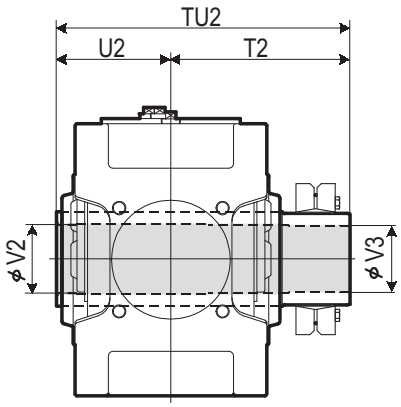 Refer to the page C-18 for details.	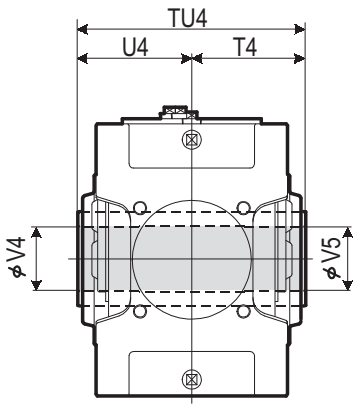 Refer to the page C-18 for details.

Size	Solid Shaft									Hollow Shaft (Shrink Disk Type)					Hollow Shaft (Key Type)				
	TU1	T1	U1	V1	W1/Depth	Key X1	Key Y1	Key Z1	Key L1	TU2	T2	U2	V2	V3	TU4	T4	U4	V4	V5
9040	349	179	170	95m6	M24/50	25	9	14	150	448	268	180	98	95	360	180	180	90	90
9045	391	181	210	105m6	M24/50	28	10	16	190	463	283	180	108	105	370	185	185	105	105
9050	411	201	210	110m6	M24/50	28	10	16	190	503	303	200	108	105	410	205	205	105	105
9055	411	201	210	120m6	M24/50	32	11	18	185	528	323	205	123	120	410	205	205	115	115

Unit: mm

Standard Shaft Arrangement Configuration

RL	RR	RB	LR	LL	LB
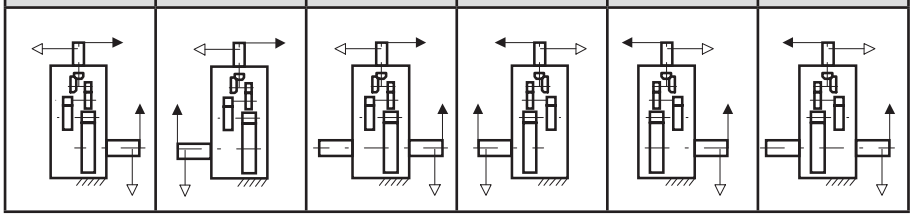					

Nomenclature

P W A [Size] R 4 - [Shaft Arrangement] [Low Speed Shaft Type] - [Nominal Reduction Ratio]

Size: 9040, 9045, 9050, 9055

Shaft Arrangement: RL, RR, RB, LR, LL, LB

Low Speed Shaft Type:
- (blank): Solid Shaft
- T : Hollow Shaft (Shrink Disk type)
- K : Hollow Shaft (Key type)

Size	Nominal Reduction Ratio 80	90	100	112	125	140	160	180	200	224	250	280	315	355	400	450
9040	○	○	○	○	○	○										
9045				○	○	○	○	○								
9050	○	○	○	○	○	○	○	○	○	○	○	○	○	○		
9055				○	○	○	○	○	○	○	○	○	○	○	○	○

Air Breather, Air Vent, Oil Fill, Drain Plug, Dip Stick, Oil Gauge, Inspection Cover, Oil Pump, Backstop (Option), Opposite Side

DIMENSIONS Right Angle Shaft Quadruple Reduction Upright Mounting 9060 ▶ 9085

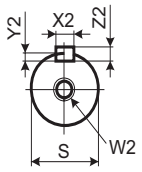

High Speed Shaft

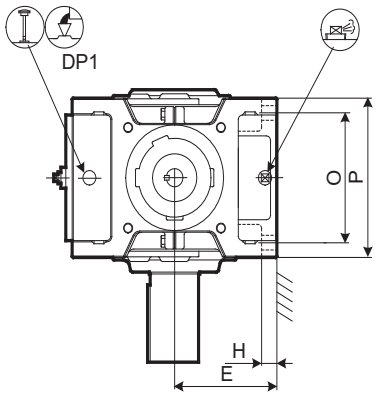

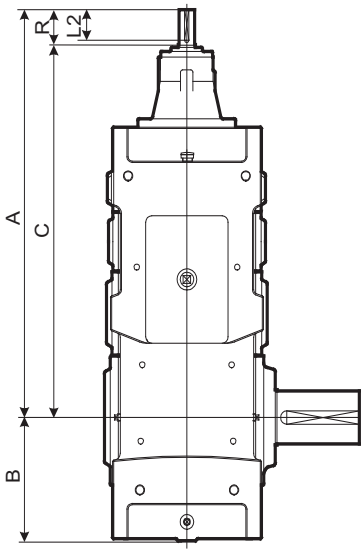

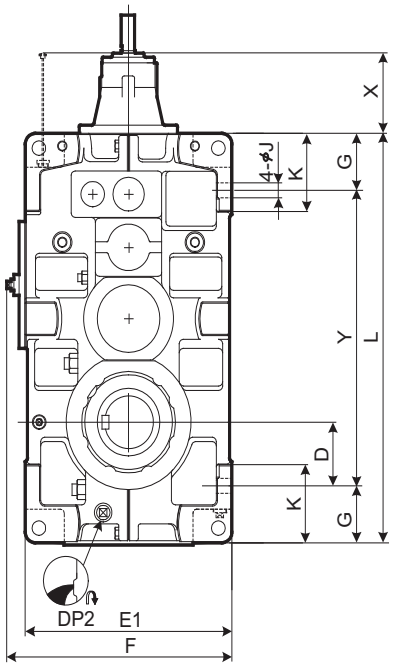

Size	A	B	C	D	E	E1	F	G	H	J	K	L	O	P	X	Y
9060	950	299	870	151	265	530	577	135	35	35	180	970	310	380	79	700
9065	996	338	916	190	300	600	647	135	35	35	180	1055	310	380	79	785
9070	1080	336	1000	163	300	600	647	160	40	42	215	1115	350	430	70	795
9075	1133	383	1053	210	335	670	717	160	52	42	220	1215	350	430	70	895
9080	1250	378	1140	205	335	670	717	160	52	42	220	1275	380	460	101	955
9085	1306	422	1196	249	375	750	797	160	52	42	220	1375	380	460	101	1055

Size	High Speed Shaft							DP1	DP2	Wt. kg	Oil Qty. L
	R	S	W2/Depth	Key							
				X2	Y2	Z2	L2				
9060	80	30k6	M10/22	8	4	7	70	1"	1"	670	68
9065	80	30k6	M10/22	8	4	7	70	1"	1"	825	85
9070	80	35k6	M12/28	10	5	8	70	1"	1"	960	107
9075	80	35k6	M12/28	10	5	8	70	1"	1"	1180	122
9080	110	45k6	M16/36	14	5.5	9	95	1"	1"	1390	128
9085	110	45k6	M16/36	14	5.5	9	95	1"	1"	1650	174

Unit: mm

1. Key and keyways are based on ISO R773-1969 Close keys (JIS B1301-1996 Parallel key in fastening type)
2. The oil quantity is approximate. Oil shall be supplied within the range shown on the oil gauge.
3. Refer to the page C-15 for dimensions shown in these drawings.
4. Refer to the page C-29 for the dimension of optional parts.

DIMENSIONS Right Angle Shaft Quadruple Reduction Upright Mounting 9060 ▶ 9085

Slow Speed Shaft

Solid Shaft	Hollow Shaft (Shrink Disk Type)	Hollow Shaft (Key Type)
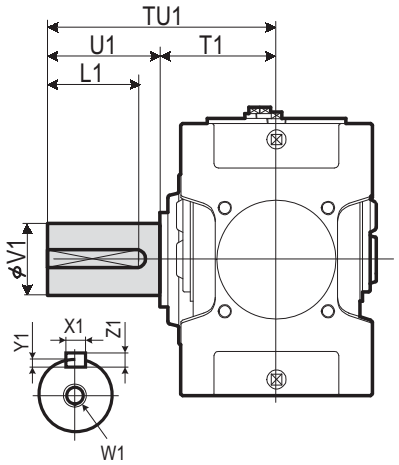	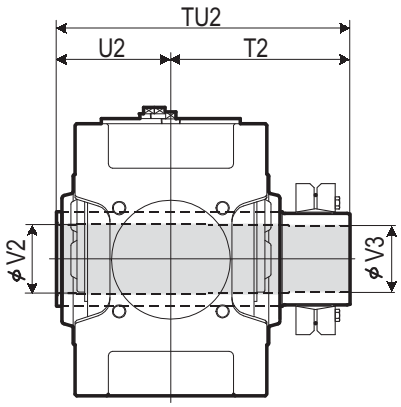 Refer to the page C-18 for details.	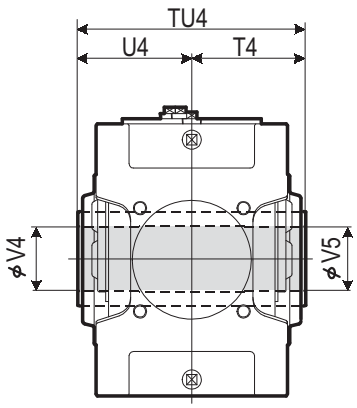 Refer to the page C-18 for details.

Size	Solid Shaft									Hollow Shaft (Shrink Disk Type)					Hollow Shaft (Key Type)				
	TU1	T1	U1	V1	W1/Depth	Key X1	Key Y1	Key Z1	Key L1	TU2	T2	U2	V2	V3	TU4	T4	U4	V4	V5
9060	440	230	210	125m6	M24/50	32	11	18	185	583	353	230	128	125	470	235	235	125	123
9065	484	234	250	140m6	M30/60	36	12	20	225	594	359	235	143	140	480	240	240	145	143
9070	509	259	250	145m6	M30/60	36	12	20	225	644	384	260	148	145	530	265	265	145	143
9075	562	262	300	160m6	M30/60	40	13	22	275	651	386	265	158	155	530	265	265	150	148
9080	582	282	300	165m6	M30/60	40	13	22	275	714	429	285	173	170	570	285	285	165	163
9085	585	285	300	175m6	M30/60	45	15	25	270	714	429	285	183	180	570	285	285	175	173

Unit: mm

Standard Shaft Arrangement Configuration

RL	RR	RB	LR	LL	LB
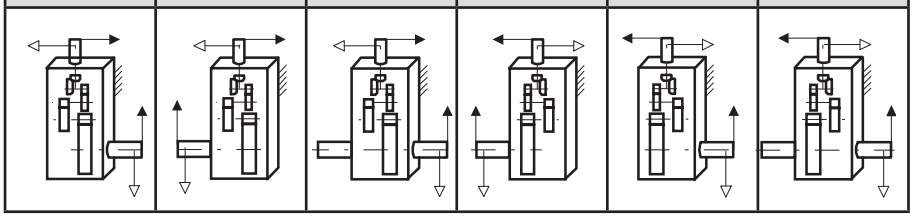					

Nomenclature

P W D [Size] R 4 W - [Shaft Arrangement] [Low Speed Shaft Type] - [Nominal Reduction Ratio]

Size: 9060, 9065, 9070, 9075, 9080, 9085

Shaft Arrangement: RL, RR, RB, LR, LL, LB

Low Speed Shaft Type:
(blank): Solid Shaft
T : Hollow Shaft (Shrink Disk type)
K : Hollow Shaft (Key type)

Size	Nominal Reduction Ratio 80	90	100	112	125	140	160	180	200	224	250	280	315	355	400	450
9060		○	○	○	○	○	○	○	○	○	○	○	○	○		
9065				○	○	○	○	○	○	○	○	○	○	○	○	○
9070	○	○	○	○	○	○		○	○	○	○	○	○	○		
9075			○	○	○	○	○	○		○	○	○	○	○	○	○
9080	○	○	○	○	○	○	○	○	○	○	○	○	○	○		
9085			○	○	○	○	○	○	○	○	○	○	○	○	○	○

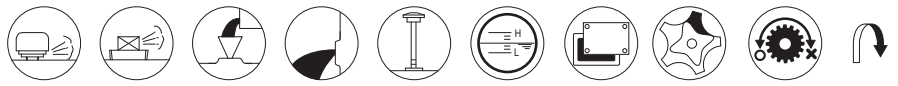

Air Breather, Air Vent, Oil Fill, Drain Plug, Dip Stick, Oil Gauge, Inspection Cover, Oil Pump, Backstop (Option), Opposite Side

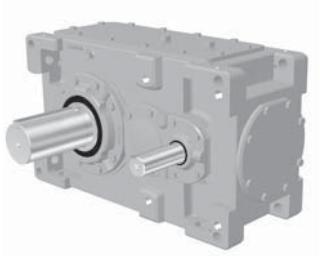

<Reducer: Parallel Shaft Horizontal Mounting>

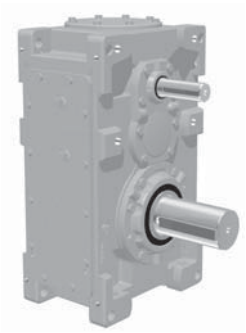

<Reducer: Parallel Shaft Upright Mounting>

B

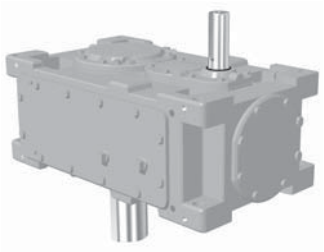

<Reducer: Parallel Shaft Vertical Mounting>

Reducer: Parallel shaft

Selection Tables ··· B- 102
Allowable Loads ··· B- 132
Dimension Sheets ··· B- 136

SELECTION Parallel Shaft Double Reduction Nominal Reduction Ratio 6.3 ▶ 8

MECHANICAL POWER RATING (kW)

Nominal Reduction Ratio	H.Speed Shaft Speed r/min	L.Speed Shaft Speed r/min	Size of Reducer 9015	9025	9030	9035	9040	9045	9050	9055	9060	9065	9070	9075	9080	9085	9090
6.3	Exact Reduction Ratio		6.257	6.193	6.314		6.049		6.470		6.188		6.246		6.429		6.609
	1800	286	76	122	179		257		350		603		900		1430		1950
	1500	238	64	102	149		223		305		530		792		1250		1710
	1200	190	51	82	120		187		256		448		677		1050		1450
	1000	159	43	68	100		162		222		388		588		884		1240
	900	143	39	62	91		148		203		355		538		798		1120
	750	119	32	51	76		125		174		302		462		668		943
7.1	Exact Reduction Ratio		7.237	7.067	6.806		6.903		7.366		7.210		6.998		7.090		7.190
	1800	254	62	100	161		241		349		559		900		1350		1830
	1500	211	52	83	135		201		293		469		757		1130		1610
	1200	169	42	67	108		162		235		377		610		914		1320
	1000	141	35	56	90		136		197		316		511		766		1100
	900	127	31	50	82		122		178		285		461		691		999
	750	106	26.5	42	68		102		149		238		386		579		836
8	Exact Reduction Ratio		7.889	7.616	8.118	7.869	7.778	7.691	7.956	8.062	7.875	7.759	8.033	7.733	8.167	7.835	8.111
	1800	225	61	99	140	187	219	257	311	350	517	603	781	900	1230	1430	1660
	1500	188	51	83	117	156	190	223	271	305	455	530	687	792	1030	1250	1450
	1200	150	41	67	94	126	154	187	227	256	378	448	571	677	836	1070	1200
	1000	125	34	56	78	105	129	162	195	222	317	388	478	588	700	932	1020
	900	113	31	50	71	95	116	148	176	203	286	355	432	538	632	841	923
	750	94	25.9	42	59	79	97	127	147	174	239	304	361	462	529	704	773
Dimension Tables		Horizontal	B-136	B-136	B-136	B-136	B-136	B-136	B-136	B-136	B-138	B-138	B-138	B-138	B-138	B-138	B-140
		Vertical	B-162	B-162	B-162	B-162	B-162	B-162	B-162	B-162	B-164	B-164	B-164	B-164	B-164	B-164	B-166
		Upright	B-180	B-180	B-180	B-180	B-180	B-180	B-180	B-180	B-182	B-182	B-182	B-182	B-182	B-182	

THERMAL POWER RATING (kW)

Nominal Reduction Ratio	H.Speed Shaft Speed r/min	Number of Cooling Fans	Size of Reducer 9015	9025	9030	9035	9040	9045	9050	9055	9060	9065	9070	9075	9080	9085	9090
Double Reduction Horizontal Type 6.3 ▼ 8	1800	-	40	51	57	73	88	108	103	127	147	174	※※	※※	※※	※※	※※
		1	111	132	143	193	216	265	250	308	415	491	※※	※※	※※	※※	※※
	1500	-	39	50	58	75	89	110	106	131	151	180	192	238	232	284	360
		1	97	117	130	176	195	240	228	282	378	452	446	500	492	679	986
	1200	-	38	49	58	75	88	110	106	131	151	182	196	245	240	296	370
		1	83	101	115	156	171	213	202	251	337	405	404	456	452	629	901
	1000	-	36	47	56	74	86	108	104	130	149	180	195	245	241	299	371
		1	71	86	100	136	148	185	176	220	294	355	356	405	402	562	799
	900	-	35	46	55	73	85	107	103	128	147	178	193	243	240	298	369
		1	66	81	94	128	139	176	166	208	277	336	337	385	382	537	761
	750	-	33	44	53	70	81	103	99	124	142	173	188	239	235	293	362
		1	57	70	82	113	122	154	146	183	245	298	300	343	342	481	680
Double Reduction Vertical Type 6.3 ▼ 8	1800	-	39	49	54	69	84	102	98	120	135	158	163	200	182	229	220
	1500	-	38	49	56	72	86	106	102	125	142	168	182	219	210	258	277
	1200	-	37	48	56	73	86	107	103	128	145	174	194	231	231	278	317
	1000	-	36	46	55	72	85	106	102	127	144	174	195	235	239	285	330
	900	-	35	45	54	71	83	105	101	126	143	173	193	235	240	286	334
	750	-	33	43	52	69	80	101	98	122	139	169	188	232	235	284	336
Double Reduction Upright Type 6.3 ▼ 8	1800	-	32	40	45	59	70	86	82	102	118	139	147	180	171	211	
		1	89	106	115	154	173	212	200	246	332	393	383	425	408	567	
	1500	-	31	40	46	60	71	88	85	105	121	144	154	190	186	227	
		1	78	94	104	141	156	192	182	225	303	361	357	400	394	543	
	1200	-	30	39	46	60	71	88	85	105	121	146	157	196	192	237	
		1	66	81	92	125	137	170	162	201	269	324	323	365	361	503	
	1000	-	29	38	45	59	69	86	83	104	119	144	156	196	193	239	
		1	56	69	80	109	118	148	141	176	235	284	285	324	321	450	
	900	-	28	37	44	58	68	86	82	102	117	142	154	195	192	238	
		1	53	65	75	103	111	141	133	166	222	269	270	308	306	429	
	750	-	26	35	43	56	65	82	79	99	114	138	151	191	188	235	
		1	45	56	66	90	97	123	117	147	196	238	240	275	273	385	

SELECTION Parallel Shaft Double Reduction Nominal Reduction Ratio 6.3 ▶ 8

Size of Reducer 9095	9100	9105	9110	9115	9118	9121	9126	9128	9131	9136	L.Speed Shaft Speed r/min	H.Speed Shaft Speed r/min	Nominal Reduction Ratio
	6.460		6.203								Exact Reduction Ratio		
	2970※		3900※								**286**	**1800**	
	2610		3440※								**238**	**1500**	
	2160		2940								**190**	**1200**	**6.3**
	1810		2550								**159**	**1000**	
	1630		2340								**143**	**900**	
	1370		2000								**119**	**750**	
7.333	6.933	7.071	7.118	7.030							Exact Reduction Ratio		
1950	2790※	2970※	3460※	3910※							**254**	**1800**	
1710	2380	2610	3050※	3440※							**211**	**1500**	
1450	1920	2230	2600	2940							**169**	**1200**	**7.1**
1240	1610	1930	2240	2550							**141**	**1000**	
1140	1450	1760	2020	2340							**127**	**900**	
978	1220	1480	1690	2000							**106**	**750**	
7.956	8.222	7.672	8.059	8.042							Exact Reduction Ratio		
1830	2480※	2790※	3200※	3460※							**225**	**1800**	
1610	2120	2450	2820※	3050※							**188**	**1500**	
1360	1710	2080	2350	2610							**150**	**1200**	**8**
1170	1430	1740	2020	2260							**125**	**1000**	
1060	1290	1570	1850	2070							**113**	**900**	
891	1080	1310	1580	1780							**94**	**750**	
B-140	B-140	B-140	B-140	B-140							Horizontal	Dimension Tables	
B-166	B-166	B-166	B-166	B-166							Vertical Upright		

Notes

1. For ※ marked values, the forced oil lubrication is required at continuous operation.

2. Consult us when the high speed shaft speed is over 1800r/min.

3. When the high speed shaft speed is not shown in the table, find it by the interpolation method.

4. When the high speed shaft speed (N) is lower than 750r/min, find the mechanical power rating (P_N) according to the following formula.

$$P_N = P_{750} \times \frac{N}{750}$$

5. Shown in the table are the ratings for the slow speed shaft.

6. Refer to B132-B135 for the allowable radial and axial load on each shaft.

Size of Reducer 9095	9100	9105	9110	9115	9118	9121	9126	9128	9131	9136	Number of Cooling Fans	H.Speed Shaft Speed r/min	Nominal Reduction Ratio
※※	※※	※※	※※	※※							-	**1800**	Double Reduction Horizontal Type 6.3 ▼ 8
※※	※※	※※	※※	※※							1		
401	454	509	567	633							-	**1500**	
1056	1148	1241	1336	1443							1		
415	471	533	610	673							-	**1200**	
970	1056	1153	1277	1362							1		
417	474	539	621	687							-	**1000**	
864	942	1034	1152	1231							1		
415	472	538	621	689							-	**900**	
823	898	988	1103	1182							1		
408	465	532	616	685							-	**750**	
737	805	889	995	1069							1		
256	221	280	188	258							-	**1800**	Double Reduction Vertical Type 6.3 ▼ 8
311	311	367	339	407							-	**1500**	
351	382	432	452	515							-	**1200**	
369	412	463	507	567							-	**1000**	
375	419	474	529	587							-	**900**	
378	425	484	549	608							-	**750**	
											- 1	**1800**	Double Reduction Upright Type 6.3 ▼ 8
											- 1	**1500**	
											- 1	**1200**	
											- 1	**1000**	
											- 1	**900**	
											- 1	**750**	

Ambient Temperature ℃	Temperature Correction Factor Without Fan	With Fan
20	1.00	1.00
30	0.85	0.87
40	0.70	0.73
50	0.55	0.60

Notes

1. Shown in the table are the ratings for models without a fan cooling unit and those with a fan. (-: none fan, 1: with a fan)

2. The values are applicable to continuous operation at ambient temperatures of 20 °C or less. When the temperature is out of the range, refer to the temperature correction factor shown above.

3. When the high speed shaft speed is not shown in the table, find it by interpolation method.

4. For ※ ※ marked, please consult us.

SELECTION Parallel Shaft Double Reduction Nominal Reduction Ratio 9 ▶ 11.2

MECHANICAL POWER RATING (kW)

Nominal Reduction Ratio	H.Speed Shaft Speed r/min	L.Speed Shaft Speed r/min	Size of Reducer 9015	9025	9030	9035	9040	9045	9050	9055	9060	9065	9070	9075	9080	9085	9090
9	Exact Reduction Ratio		9.125	8.690	8.750	8.556	8.875	8.750	9.057	9.058	9.176	8.874	9.000	8.677	9.007	8.603	8.824
	1800	**200**	49	81	126	170	188	253	286	350	443	583	708	900	1070	1410	1560
	1500	**167**	41	68	105	142	158	212	239	305	371	489	593	792	900	1180	1340
	1200	**133**	33	55	85	114	127	170	192	246	298	393	477	647	725	956	1080
	1000	**111**	28.0	46	71	96	106	142	161	206	250	329	400	542	607	801	907
	900	**100**	25.3	41	64	86	95	128	145	186	225	297	361	489	548	723	818
	750	**83**	21.1	34	53	72	80	107	121	155	188	249	302	409	458	605	685
10	Exact Reduction Ratio		10.143	9.722	9.944	10.118	9.528	9.889	10.156	9.914	9.750	9.875	9.665	9.945	9.905	9.953	10.342
	1800	**180**	47	78	115	146	188	219	259	311	452	517	689	781	1020	1230	1380
	1500	**150**	40	65	96	122	158	190	226	271	382	455	593	687	861	1080	1180
	1200	**120**	32	52	77	98	127	159	184	227	307	384	477	588	693	881	964
	1000	**100**	26.9	44	64	82	106	136	154	197	257	333	399	505	580	738	807
	900	**90**	24.2	39	58	74	95	123	139	180	232	304	360	456	524	666	728
	750	**75**	20.2	33	48	62	80	103	116	155	194	255	301	381	438	558	610
11.2	Exact Reduction Ratio		11.732	11.094	10.719	11.000	10.872	11.250	11.563	11.138	11.361	11.294	10.829	11.160	10.924	10.929	11.250
	1800	**161**	39	64	103	133	154	198	225	299	360	462	592	751	891	1120	1260
	1500	**134**	32	53	86	111	129	166	188	250	301	387	495	629	746	941	1060
	1200	**107**	26.2	43	69	89	104	133	151	201	242	311	399	507	600	758	855
	1000	**89**	21.9	36	58	75	87	111	127	168	202	260	334	424	503	635	716
	900	**80**	19.7	32	52	67	78	100	114	152	183	235	301	383	453	573	646
	750	**67**	16.5	27.3	43	56	65	84	95	127	153	196	252	320	379	479	540
Dimension Tables		Horizontal	B-136	B-136	B-136	B-136	B-136	B-136	B-136	B-136	B-138	B-138	B-138	B-138	B-138	B-138	B-140
		Vertical	B-162	B-162	B-162	B-162	B-162	B-162	B-162	B-162	B-164	B-164	B-164	B-164	B-164	B-164	B-166
		Upright	B-180	B-180	B-180	B-180	B-180	B-180	B-180	B-180	B-182	B-182	B-182	B-182	B-182	B-182	

THERMAL POWER RATING (kW)

Nominal Reduction Ratio	H.Speed Shaft Speed r/min	Number of Cooling Fans	Size of Reducer 9015	9025	9030	9035	9040	9045	9050	9055	9060	9065	9070	9075	9080	9085	9090
Double Reduction Horizontal Type 9 ▼ 11.2	**1800**	-	35	46	53	67	81	100	99	124	141	171	180	※※	※※	※※	※※
		1	97	119	134	175	199	245	240	300	397	482	469	※※	※※	※※	※※
	1500	-	34	45	53	67	81	100	100	126	143	174	185	229	226	279	344
		1	84	104	120	158	177	218	215	271	358	437	431	481	479	669	942
	1200	-	32	43	52	66	79	99	98	125	142	173	187	231	230	286	347
		1	71	89	105	138	154	192	188	239	315	385	385	431	433	607	844
	1000	-	31	41	51	65	77	96	96	122	139	170	185	229	229	285	344
		1	60	76	90	119	132	165	163	207	273	336	337	378	382	536	741
	900	-	30	40	50	63	75	94	94	120	136	167	182	226	227	283	340
		1	56	70	85	112	124	154	153	195	257	316	319	357	362	509	702
	750	-	28	38	48	61	72	90	90	116	131	162	177	220	222	276	331
		1	48	61	74	98	108	135	133	171	226	279	282	316	322	453	622
Double Reduction Vertical Type 9 ▼ 11.2	**1800**	-	35	46	53	64	81	96	98	118	139	158	180	203	216	238	241
	1500	-	34	45	53	65	81	97	100	121	143	164	185	221	226	266	284
	1200	-	32	43	52	65	79	97	98	122	142	166	187	231	230	285	306
	1000	-	31	41	51	63	77	94	96	120	139	165	185	229	229	285	313
	900	-	30	40	50	62	75	93	94	118	136	163	182	226	227	283	314
	750	-	28	38	48	60	72	89	90	115	131	159	177	220	222	276	311
Double Reduction Upright Type 9 ▼ 11.2	**1800**	-	28	36	42	53	65	80	79	99	113	137	144	177	173	213	
		1	78	96	107	140	159	196	192	240	317	386	375	419	412	573	
	1500	-	27	36	43	54	65	80	80	101	114	139	148	183	181	224	
		1	68	84	96	126	141	174	172	217	287	349	345	385	383	535	
	1200	-	26	34	42	53	64	79	79	100	113	138	149	185	184	228	
		1	57	71	84	110	123	153	150	191	252	308	308	345	346	485	
	1000	-	25	33	41	52	62	77	77	98	111	136	148	183	183	228	
		1	48	61	72	95	106	132	130	166	219	268	270	302	305	429	
	900	-	24	32	40	51	60	75	75	96	109	134	146	181	182	226	
		1	45	56	68	89	99	123	122	156	206	252	255	286	290	407	
	750	-	22	30	38	49	58	72	72	93	105	130	142	176	177	221	
		1	38	48	59	78	86	108	107	137	181	223	225	253	257	362	

SELECTION Parallel Shaft Double Reduction Nominal Reduction Ratio 9 ▶ 11.2

Size of Reducer 9095	9100	9105	9110	9115	9118	9121	9126	9128	9131	9136	L.Speed Shaft Speed r/min	H.Speed Shaft Speed r/min	Nominal Reduction Ratio
9.000	8.824	9.000	9.248	9.134							Exact Reduction Ratio		
1660	2250※	2480※	2840※	3200※							**200**	**1800**	
1450	1890	2190	2500※	2820※							**167**	**1500**	
1200	1520	1820	2070	2350							**133**	**1200**	**9**
1030	1270	1550	1740	2020							**111**	**1000**	
948	1150	1390	1570	1850							**100**	**900**	
813	965	1170	1310	1580							**83**	**750**	
9.765	9.984	9.765	9.774	10.449							Exact Reduction Ratio		
1560	2090※	2330※	2780※	2850※							**180**	**1800**	
1370	1760	2040	2400※	2500※							**150**	**1500**	
1130	1410	1640	1990	2090							**120**	**1200**	**10**
966	1180	1380	1700	1790							**100**	**1000**	
872	1070	1240	1560	1640							**90**	**900**	
730	897	1040	1310	1390							**75**	**750**	
11.475	10.714	10.929	11.216	11.078							Exact Reduction Ratio		
1380	1860※	2150※	2470※	2780※							**161**	**1800**	
1180	1560	1850	2130※	2400※							**134**	**1500**	
981	1260	1530	1720	1990							**107**	**1200**	**11.2**
842	1050	1280	1440	1710							**89**	**1000**	
770	954	1150	1300	1560							**80**	**900**	
651	799	970	1090	1340							**67**	**750**	
B-140	B-140	B-140	B-140	B-140							Horizontal	Dimension Tables	
B-166	B-166	B-166	B-166	B-166							Vertical Upright		

Notes

1. For ※ marked values, the forced oil lubrication is required at continuous operation.

2. Consult us when the high speed shaft speed is over 1800r/min.

3. When the high speed shaft speed is not shown in the table, find it by the interpolation method.

4. When the high speed shaft speed (N) is lower than 750r/min, find the mechanical power rating (P_N) according to the following formula.

$$P_N = P_{750} \times \frac{N}{750}$$

5. Shown in the table are the ratings for the slow speed shaft.

6. Refer to B132-B135 for the allowable radial and axial load on each shaft.

Size of Reducer 9095	9100	9105	9110	9115	9118	9121	9126	9128	9131	9136	Number of Cooling Fans	H.Speed Shaft Speed r/min	Nominal Reduction Ratio
※※	※※	※※	※※	※※							-	**1800**	Double Reduction Horizontal Type 9 ▼ 11.2
※※	※※	※※	※※	※※							1		
374	443	496	544	619							-	**1500**	
986	1119	1210	1282	1411							1		
376	452	504	563	644							-	**1200**	
879	1015	1090	1178	1302							1		
371	451	500	565	646							-	**1000**	
770	897	960	1049	1157							1		
367	448	496	563	642							-	**900**	
728	852	910	1000	1102							1		
357	438	484	554	631							-	**750**	
644	759	809	896	985							1		
274	279	326	276	338							-	**1800**	Double Reduction Vertical Type 9 ▼ 11.2
315	344	388	379	441							-	**1500**	
335	384	434	456	518							-	**1200**	
340	400	448	485	554							-	**1000**	
340	404	451	495	566							-	**900**	
337	405	451	502	575							-	**750**	
											-	**1800**	Double Reduction Upright Type 9 ▼ 11.2
											1		
											-	**1500**	
											1		
											-	**1200**	
											1		
											-	**1000**	
											1		
											-	**900**	
											1		
											-	**750**	
											1		

Ambient Temperature ℃	Temperature Correction Factor Without Fan	With Fan
20	1.00	1.00
30	0.85	0.87
40	0.70	0.73
50	0.55	0.60

Notes

1. Shown in the table are the ratings for models without a fan cooling unit and those with a fan. (-: none fan, 1: with a fan)

2. The values are applicable to continuous operation at ambient temperatures of 20 °C or less. When the temperature is out of the range, refer to the temperature correction factor shown above.

3. When the high speed shaft speed is not shown in the table, find it by interpolation method.

4. For ※ ※ marked, please consult us.

SELECTION Parallel Shaft Double Reduction Nominal Reduction Ratio 12.5 ▶ 16

MECHANICAL POWER RATING (kW)

Nominal Reduction Ratio	H.Speed Shaft Speed r/min	L.Speed Shaft Speed r/min	Size of Reducer 9015	9025	9030	9035	9040	9045	9050	9055	9060	9065	9070	9075	9080	9085	9090
12.5	Exact Reduction Ratio		12.710	12.407	12.785	12.394	12.485	12.114	12.594	12.656	12.206	12.226	12.600	11.966	12.762	12.071	12.978
	1800	144	38	61	89	120	145	191	222	259	366	452	547	689	804	1060	1110
	1500	120	32	51	75	100	121	165	185	226	307	398	458	607	673	908	959
	1200	96	25.8	41	60	80	97	133	149	190	246	328	368	504	542	731	773
	1000	80	21.5	34	50	67	81	111	125	164	206	274	308	422	453	612	647
	900	72	19.4	31	45	61	73	101	112	148	186	247	278	380	409	552	584
	750	60	16.2	26.2	38	51	61	84	94	124	155	207	232	318	342	462	488
14	Exact Reduction Ratio		14.701	14.158	13.781	13.475	14.247	13.781	14.337	14.219	14.224	13.983	14.118	13.428	14.076	13.255	14.118
	1800	129	31	50	81	109	118	162	183	235	289	375	457	628	696	931	1010
	1500	107	26.1	42	67	91	99	136	153	197	242	314	383	526	583	780	851
	1200	86	21.0	34	54	73	79	109	123	158	194	252	308	423	469	628	685
	1000	71	17.5	28.5	45	61	66	91	102	132	162	211	257	354	392	526	573
	900	64	15.8	25.7	41	55	60	82	92	119	146	190	232	319	354	474	517
	750	54	13.2	21.4	34	46	50	69	77	100	122	159	194	267	296	397	433
16	Exact Reduction Ratio		15.778	15.340	15.997	15.935	15.556	15.874	16.504	15.694	15.996	15.306	15.750	15.600	15.556	15.554	16.222
	1800	113	31	50	72	94	116	152	170	237	281	389	440	565	663	846	920
	1500	94	25.9	42	60	78	97	127	142	198	235	327	368	484	555	709	773
	1200	75	20.8	33	48	63	78	102	114	159	189	263	296	389	446	571	622
	1000	63	17.4	28.2	40	52	65	85	95	133	158	220	248	325	373	478	520
	900	56	15.7	25.4	36	47	59	77	86	120	142	198	223	293	337	431	469
	750	47	13.1	21.2	30	39	49	64	72	100	119	166	187	245	281	360	392
Dimension Tables		Horizontal	B-136	B-136	B-136	B-136	B-136	B-136	B-136	B-136	B-138	B-138	B-138	B-138	B-138	B-138	B-140
		Vertical	B-162	B-162	B-162	B-162	B-162	B-162	B-162	B-162	B-164	B-164	B-164	B-164	B-164	B-164	B-166
		Upright	B-180	B-180	B-180	B-180	B-180	B-180	B-180	B-180	B-182	B-182	B-182	B-182	B-182	B-182	

THERMAL POWER RATING (kW)

Nominal Reduction Ratio	H.Speed Shaft Speed r/min	Number of Cooling Fans	Size of Reducer 9015	9025	9030	9035	9040	9045	9050	9055	9060	9065	9070	9075	9080	9085	9090
Double Reduction Horizontal Type 12.5 ▼ 16	1800	-	30	42	51	63	74	95	89	116	125	159	163	210	206	261	311
		1	85	111	130	167	182	233	214	281	353	448	425	495	489	701	959
	1500	-	29	41	50	63	73	94	87	115	124	159	164	211	209	265	315
		1	72	95	113	148	159	205	188	248	311	399	380	444	442	635	862
	1200	-	27	39	48	62	70	91	85	112	121	155	161	209	208	264	311
		1	60	80	96	129	135	176	162	214	268	345	332	389	390	561	757
	1000	-	26	37	46	60	67	88	81	108	116	150	157	204	204	259	304
		1	50	67	81	110	115	151	138	183	230	296	286	336	339	488	656
	900	-	25	36	44	59	65	85	79	106	113	147	154	200	200	255	299
		1	46	62	75	103	107	140	128	171	214	278	269	316	319	460	617
	750	-	23	33	42	56	62	81	75	101	108	141	147	192	193	247	288
		1	39	53	64	90	92	121	111	149	186	243	235	277	280	404	542
Double Reduction Vertical Type 12.5 ▼ 16	1800	-	31	43	52	63	75	95	90	116	130	159	170	210	216	261	258
	1500	-	29	41	51	63	74	95	88	115	127	159	169	211	220	265	274
	1200	-	27	39	48	62	71	92	85	112	123	155	165	209	216	264	283
	1000	-	26	37	46	60	67	88	82	108	118	150	160	204	210	259	283
	900	-	25	36	45	59	65	86	80	106	115	147	156	200	205	255	281
	750	-	23	33	42	56	62	81	76	101	109	141	149	192	197	247	274
Double Reduction Upright Type 12.5 ▼ 16	1800	-	24	34	41	51	59	76	71	93	100	127	130	168	164	209	
		1	68	89	104	133	145	186	171	225	283	359	340	396	391	561	
	1500	-	23	33	40	51	58	75	70	92	99	127	131	169	167	212	
		1	58	76	90	119	127	164	151	198	249	319	304	355	354	508	
	1200	-	22	31	38	50	56	73	68	90	96	124	129	167	166	211	
		1	48	64	77	103	108	141	129	171	215	276	266	311	312	449	
	1000	-	20	29	37	48	54	70	65	87	93	120	125	163	163	207	
		1	40	54	65	88	92	121	110	147	184	237	229	269	271	390	
	900	-	20	28	35	47	52	68	63	85	91	118	123	160	160	204	
		1	37	50	60	83	85	112	103	137	171	222	215	253	255	368	
	750	-	18	27	33	45	49	65	60	81	86	113	118	154	154	197	
		1	31	42	51	72	74	97	89	119	149	194	188	221	224	324	

SELECTION Parallel Shaft Double Reduction Nominal Reduction Ratio 12.5 ▶ 16

Size of Reducer 9095	9100	9105	9110	9115	9118	9121	9126	9128	9131	9136	L.Speed Shaft Speed r/min	H.Speed Shaft Speed r/min	Nominal Reduction Ratio
12.450	12.950	11.857	12.434	12.672							Exact Reduction Ratio		
1290	1630※	2020※	2240※	2470※							**144**	**1800**	
1110	1360	1690※	1920※	2130※							**120**	**1500**	
910	1100	1360	1590	1770							**96**	**1200**	**12.5**
762	922	1140	1360	1520							**80**	**1000**	
688	832	1030	1240	1370							**72**	**900**	
576	696	864	1040	1150							**60**	**750**	
14.400	13.897	14.175	14.268	14.092							Exact Reduction Ratio		
1110	1450※	1700※	1990※	2240※							**129**	**1800**	
958	1210	1460	1690※	1920※							**107**	**1500**	
794	980	1190	1360	1590							**86**	**1200**	**14**
681	821	996	1140	1370							**71**	**1000**	
623	740	899	1030	1250							**64**	**900**	
521	619	752	862	1070							**54**	**750**	
15.624	15.961	15.379	15.325	16.121							Exact Reduction Ratio		
1050	1330※	1570※	1870※	2000※							**113**	**1800**	
902	1110	1310	1600※	1710※							**94**	**1500**	
730	898	1060	1330	1420							**75**	**1200**	**16**
611	752	887	1120	1200							**63**	**1000**	
551	678	800	1010	1080							**56**	**900**	
461	567	670	850	911							**47**	**750**	
B-140	B-140	B-140	B-140	B-140							Horizontal	Dimension Tables	
B-166	B-166	B-166	B-166	B-166							Vertical		
											Upright		

Notes

1. For ※ marked values, the forced oil lubrication is required at continuous operation.

2. Consult us when the high speed shaft speed is over 1800r/min.

3. When the high speed shaft speed is not shown in the table, find it by the interpolation method.

4. When the high speed shaft speed (N) is lower than 750r/min, find the mechanical power rating (P_N) according to the following formula.

$$P_N = P_{750} \times \frac{N}{750}$$

5. Shown in the table are the ratings for the slow speed shaft.

6. Refer to B132-B135 for the allowable radial and axial load on each shaft.

Size of Reducer 9095	9100	9105	9110	9115	9118	9121	9126	9128	9131	9136	Number of Cooling Fans	H.Speed Shaft Speed r/min	Nominal Reduction Ratio
359	399	462	505	565							-	**1800**	Double Reduction Horizontal Type 12.5 ▼ 16
1064	1133	1265	1338	1446							1		
364	405	471	522	585							-	**1500**	
959	1024	1149	1230	1332							1		
362	404	471	527	592							-	**1200**	
847	905	1020	1103	1197							1		
355	396	464	522	588							-	**1000**	
736	788	890	968	1053							1		
350	390	458	516	582							-	**900**	
694	743	841	916	998							1		
338	378	444	502	568							-	**750**	
611	654	743	812	887							1		
289	315	344	343	373							-	**1800**	Double Reduction Vertical Type 12.5 ▼ 16
316	342	392	406	452							-	**1500**	
328	359	417	449	504							-	**1200**	
329	362	423	463	521							-	**1000**	
328	361	423	466	525							-	**900**	
322	356	418	464	525							-	**750**	
											-	**1800**	Double Reduction Upright Type 12.5 ▼ 16
											1		
											-	**1500**	
											1		
											-	**1200**	
											1		
											-	**1000**	
											1		
											-	**900**	
											1		
											-	**750**	
											1		

Ambient Temperature ℃	Temperature Correction Factor Without Fan	With Fan
20	1.00	1.00
30	0.85	0.87
40	0.70	0.73
50	0.55	0.60

Notes

1. Shown in the table are the ratings for models without a fan cooling unit and those with a fan. (-: none fan, 1: with a fan)

2. The values are applicable to continuous operation at ambient temperatures of 20 °C or less. When the temperature is out of the range, refer to the temperature correction factor shown above.

3. When the high speed shaft speed is not shown in the table, find it by interpolation method.

SELECTION Parallel Shaft Double Reduction Nominal Reduction Ratio 18 ▶ 22.4

MECHANICAL POWER RATING (kW)

Nominal Reduction Ratio	H.Speed Shaft Speed r/min	L.Speed Shaft Speed r/min	Size of Reducer 9015	9025	9030	9035	9040	9045	9050	9055	9060	9065	9070	9075	9080	9085	9090
18	Exact Reduction Ratio		18.250	17.503	17.243	17.325	17.750	18.059	18.789	17.631	18.640	17.506	17.647	17.506	17.157	17.078	17.647
	1800	100	25.3	41	65	85	95	124	140	191	222	301	368	485	574	728	818
	1500	83	21.1	34	54	71	80	104	117	159	185	252	308	406	481	610	685
	1200	67	17.0	27.6	43	57	64	84	94	128	149	203	247	326	386	490	551
	1000	56	14.2	23.1	36	48	53	70	78	107	124	169	207	273	323	410	461
	900	50	12.8	20.8	32	43	48	63	71	96	112	153	186	246	291	370	416
	750	42	10.7	17.4	27.5	36	40	52	59	81	94	128	156	206	244	310	348
20	Exact Reduction Ratio					19.938		19.778		20.566		20.059		19.500		18.958	
	1800	90	*	*	*	75	*	123	*	182	*	300	*	465	*	699	*
	1500	75	*	*	*	63	*	103	*	152	*	251	*	389	*	585	*
	1200	60	*	*	*	50	*	82	*	122	*	202	*	313	*	470	*
	1000	50	*	*	*	42	*	69	*	102	*	169	*	261	*	393	*
	900	45	*	*	*	38	*	62	*	92	*	152	*	236	*	355	*
	750	38	*	*	*	31	*	52	*	77	*	127	*	197	*	297	*
22.4	Exact Reduction Ratio					21.676		22.500		23.105		22.941		21.882		20.817	
	1800	80	*	*	*	68	*	100	*	146	*	231	*	390	*	601	*
	1500	67	*	*	*	57	*	84	*	122	*	193	*	326	*	503	*
	1200	54	*	*	*	46	*	67	*	98	*	155	*	262	*	404	*
	1000	45	*	*	*	38	*	56	*	82	*	130	*	219	*	338	*
	900	40	*	*	*	34	*	51	*	74	*	117	*	198	*	305	*
	750	33	*	*	*	29.1	*	42	*	62	*	98	*	165	*	255	*
Dimension Tables		Horizontal	B-136	B-136	B-136	B-136	B-136	B-136	B-136	B-136	B-138	B-138	B-138	B-138	B-138	B-138	B-140
		Vertical	B-162	B-162	B-162	B-162	B-162	B-162	B-162	B-162	B-164	B-164	B-164	B-164	B-164	B-164	B-166
		Upright	B-180	B-180	B-180	B-180	B-180	B-180	B-180	B-180	B-182	B-182	B-182	B-182	B-182	B-182	

THERMAL POWER RATING (kW)

Nominal Reduction Ratio	H.Speed Shaft Speed r/min	Number of Cooling Fans	Size of Reducer 9015	9025	9030	9035	9040	9045	9050	9055	9060	9065	9070	9075	9080	9085	9090
Double Reduction Horizontal Type 18 ▼ 22.4	1800	-	29	41	50	60	66	83	88	106	127	153	166	194	209	247	309
		1	81	106	127	156	162	203	213	255	358	431	433	459	498	664	950
	1500	-	28	39	49	58	65	81	87	104	126	150	167	194	213	249	311
		1	69	91	110	135	142	177	187	223	316	376	387	407	450	595	854
	1200	-	26	37	47	55	63	78	84	100	122	145	164	189	211	245	308
		1	58	77	93	114	121	151	161	190	272	323	338	353	397	521	750
	1000	-	25	35	45	52	60	74	81	96	118	140	160	184	207	239	301
		1	48	65	79	96	103	127	137	162	233	276	291	303	345	450	650
	900	-	24	34	43	51	59	72	79	93	115	136	156	180	204	235	296
		1	44	60	73	89	97	118	128	151	217	257	273	284	325	423	611
	750	-	22	32	41	48	56	68	75	88	110	129	150	172	196	226	285
		1	37	51	63	76	84	102	110	130	188	222	239	247	285	370	536
Double Reduction Vertical Type 18 ▼ 22.4	1800	-	29	41	51	60	62	85	90	107	131	149	173	201	224	262	256
	1500	-	28	40	49	58	62	82	88	105	129	146	172	199	224	260	272
	1200	-	26	37	47	55	61	79	85	100	124	140	168	193	219	253	280
	1000	-	25	35	45	53	59	75	82	96	120	135	162	186	213	246	280
	900	-	24	34	43	51	57	73	79	93	116	131	159	182	209	240	278
	750	-	22	32	41	48	55	68	75	88	111	124	152	174	200	230	272
Double Reduction Upright Type 18 ▼ 22.4	1800	-	23	32	40	48	53	66	71	84	102	122	133	156	168	198	
		1	65	85	102	125	130	163	171	204	287	345	346	367	399	532	
	1500	-	22	31	39	46	52	65	70	83	101	120	133	155	170	199	
		1	55	73	88	108	114	141	150	178	253	301	310	326	360	476	
	1200	-	21	30	37	44	50	62	67	80	98	116	131	152	169	196	
		1	46	61	75	91	97	121	129	152	218	258	270	282	318	417	
	1000	-	20	28	36	42	48	59	65	76	94	112	128	147	166	191	
		1	38	52	63	77	83	102	110	129	186	221	233	243	276	360	
	900	-	19	27	35	40	47	58	63	74	92	109	125	144	163	188	
		1	35	48	59	71	77	95	102	121	174	206	219	227	260	339	
	750	-	18	25	32	38	45	54	60	70	88	103	120	138	157	181	
		1	30	41	50	61	67	81	88	104	151	178	191	198	228	296	

SELECTION Parallel Shaft Double Reduction Nominal Reduction Ratio 18 ▶ 22.4

Size of Reducer 9095	9100	9105	9110	9115	9118	9121	9126	9128	9131	9136	L.Speed Shaft Speed r/min	H.Speed Shaft Speed r/min	Nominal Reduction Ratio
18.000	17.128	17.471	17.585	17.368							Exact Reduction Ratio		
920	1180※	1420※	1650※	1870※							**100**	**1800**	
789	994	1200	1380※	1610※							**83**	**1500**	
654	799	971	1110	1330							**67**	**1200**	**18**
555	669	812	931	1140							**56**	**1000**	
501	603	733	840	1040							**50**	**900**	
419	505	613	703	899							**42**	**750**	
19.529		18.955		19.869							Exact Reduction Ratio		
867	*	1280※	*	1670※							**90**	**1800**	
730	*	1070	*	1430※							**75**	**1500**	
587	*	864	*	1170							**60**	**1200**	**20**
491	*	723	*	983							**50**	**1000**	
443	*	652	*	887							**45**	**900**	
370	*	546	*	742							**38**	**750**	
											Exact Reduction Ratio		
*	*	*	*	*							**80**	**1800**	
*	*	*	*	*							**67**	**1500**	
*	*	*	*	*							**54**	**1200**	**22.4**
*	*	*	*	*							**45**	**1000**	
*	*	*	*	*							**40**	**900**	
*	*	*	*	*							**33**	**750**	
B-140	B-140	B-140	B-140	B-140							Horizontal	Dimension Tables	
B-166	B-166	B-166	B-166	B-166							Vertical		
											Upright		

* marked models are triple reduction units. Refer to B-110 and B-111.

Notes

1. For ※ marked values, the forced oil lubrication is required at continuous operation.

2. Consult us when the high speed shaft speed is over 1800r/min.

3. When the high speed shaft speed is not shown in the table, find it by the interpolation method.

4. When the high speed shaft speed (N) is lower than 750r/min, find the mechanical power rating (P_N) according to the following formula.

$$P_N = P_{750} \times \frac{N}{750}$$

5. Shown in the table are the ratings for the slow speed shaft.

6. Refer to B132-B135 for the allowable radial and axial load on each shaft.

Size of Reducer 9095	9100	9105	9110	9115	9118	9121	9126	9128	9131	9136	Number of Cooling Fans	H.Speed Shaft Speed r/min	Nominal Reduction Ratio
336	402	437	485	537							-	**1800**	Double Reduction Horizontal Type 18 ▼ 22.4
995	1141	1198	1285	1375							1		
338	408	441	500	550							-	**1500**	
889	1032	1076	1179	1252							1		
332	406	437	504	551							-	**1200**	
777	911	946	1056	1114							1		
324	399	428	499	543							-	**1000**	
672	793	821	926	973							1		
318	393	421	493	536							-	**900**	
631	747	773	876	920							1		
306	380	406	480	521							-	**750**	
553	658	679	776	813							1		
284	319	355	349	402							-	**1800**	Double Reduction Vertical Type 18 ▼ 22.4
298	346	380	397	447							-	**1500**	
305	362	393	431	478							-	**1200**	
303	365	395	444	488							-	**1000**	
300	364	393	446	489							-	**900**	
293	358	385	444	485							-	**750**	
											-	**1800**	Double Reduction Upright Type 18 ▼ 22.4
											1		
											-	**1500**	
											1		
											-	**1200**	
											1		
											-	**1000**	
											1		
											-	**900**	
											1		
											-	**750**	
											1		

Ambient Temperature ℃	Temperature Correction Factor Without Fan	With Fan
20	1.00	1.00
30	0.85	0.87
40	0.70	0.73
50	0.55	0.60

Notes

1. Shown in the table are the ratings for models without a fan cooling unit and those with a fan. (-: none fan, 1: with a fan)

2. The values are applicable to continuous operation at ambient temperatures of 20 °C or less. When the temperature is out of the range, refer to the temperature correction factor shown above.

3. When the high speed shaft speed is not shown in the table, find it by interpolation method.

SELECTION Parallel Shaft Triple Reduction Nominal Reduction Ratio 20 ▶ 25

MECHANICAL POWER RATING (kW)

Nominal Reduction Ratio	H.Speed Shaft Speed r/min	L.Speed Shaft Speed r/min	Size of Reducer 9015	9025	9030	9035	9040	9045	9050	9055	9060	9065	9070	9075	9080	9085	9090
20	Exact Reduction Ratio		19.894	19.681	20.280		19.884		19.590		18.988		20.067		20.054		20.585
	1800	90	26.4	39	61	*	98	*	154	*	254	*	356	*	554	*	758
	1500	75	22.1	33	51	*	82	*	129	*	213	*	310	*	463	*	650
	1200	60	17.7	27.8	41	*	66	*	103	*	171	*	250	*	372	*	527
	1000	50	14.8	23.6	34	*	55	*	86	*	143	*	209	*	311	*	441
	900	45	13.3	21.2	30	*	49	*	78	*	129	*	188	*	281	*	397
	750	38	11.1	17.7	25.8	*	41	*	65	*	107	*	157	*	235	*	332
22.4	Exact Reduction Ratio		23.011	22.457	21.860		22.689		22.303		22.125		22.484		22.119		22.394
	1800	80	21.5	34	55	*	80	*	127	*	201	*	310	*	480	*	694
	1500	67	18.0	28.8	46	*	67	*	106	*	168	*	260	*	401	*	581
	1200	54	14.4	23.1	37	*	54	*	85	*	135	*	208	*	322	*	467
	1000	45	12.1	19.3	30	*	45	*	71	*	112	*	174	*	269	*	391
	900	40	10.9	17.4	27.9	*	40	*	64	*	101	*	157	*	243	*	352
	750	33	9.1	14.5	23.3	*	34	*	53	*	85	*	131	*	203	*	294
25	Exact Reduction Ratio		24.696	24.332	25.374	25.277	24.774	25.281	25.673	24.413	24.883	23.810	25.083	24.844	24.444	24.441	25.732
	1800	72	21.4	32	49	64	79	100	118	165	195	261	299	356	456	572	624
	1500	60	17.8	28.2	41	53	66	83	98	138	163	226	250	310	382	488	527
	1200	48	14.3	22.9	32	43	53	67	79	110	131	182	201	260	307	392	423
	1000	40	12.0	19.1	27.5	35	44	55	66	92	109	152	168	220	256	328	354
	900	36	10.8	17.2	24.8	32	40	50	59	83	99	137	151	199	231	296	319
	750	30	9.0	14.4	20.7	27.0	33	41	50	69	82	114	126	166	193	247	267
Dimension Tables		Horizontal	B-142	B-142	B-142	B-142	B-142	B-142	B-142	B-142	B-144	B-144	B-144	B-144	B-144	B-144	B-146
		Vertical	B-168	B-168	B-168	B-168	B-168	B-168	B-168	B-168	B-170	B-170	B-170	B-170	B-170	B-170	B-172
		Upright	B-184	B-184	B-184	B-184	B-184	B-184	B-184	B-184	B-186	B-186	B-186	B-186	B-186	B-186	

THERMAL POWER RATING (kW)

Nominal Reduction Ratio	H.Speed Shaft Speed r/min	Number of Cooling Fans	Size of Reducer 9015	9025	9030	9035	9040	9045	9050	9055	9060	9065	9070	9075	9080	9085	9090
Triple Reduction Horizontal Type 20 ▼ 25	1800	-	24	36	42	54	63	77	77	97	107	131	145	179	184	225	235
		1	66	93	78	114	155	189	187	234	210	257	269	309	437	605	556
	1500	-	23	35	42	53	62	76	76	95	106	130	145	178	185	226	238
		1	58	81	68	99	135	166	164	205	185	227	238	273	391	540	501
	1200	-	22	34	40	51	60	73	74	92	104	126	142	175	183	223	237
		1	49	70	58	85	115	141	141	176	160	195	207	237	343	473	443
	1000	-	21	32	38	49	57	70	71	89	101	123	138	170	179	217	233
		1	41	59	50	72	98	120	121	151	138	169	179	204	298	409	386
	900	-	20	31	37	47	56	68	70	87	98	120	135	166	176	214	229
		1	38	55	46	67	91	112	113	141	129	158	168	192	280	385	364
	750	-	19	30	36	45	53	64	67	83	94	115	130	160	170	206	223
		1	33	48	40	58	79	96	98	122	113	137	147	168	247	338	322
Triple Reduction Vertical Type 20 ▼ 25	1800	-	22	33	40	51	60	73	73	91	100	122	135	167	168	206	212
	1500	-	22	33	40	50	59	73	73	91	101	123	137	169	173	212	221
	1200	-	21	32	39	49	58	70	71	89	100	122	136	168	174	212	225
	1000	-	21	31	37	47	56	68	69	87	97	119	134	165	172	210	223
	900	-	20	31	37	46	55	66	68	85	96	117	132	162	170	207	222
	750	-	19	29	35	44	52	63	65	81	92	113	127	156	166	201	217
Triple Reduction Upright Type 20 ▼ 25	1800	-	24	36	42	54	69	77	76	96	106	131	144	178	182	223	
		1	66	93	78	113	168	189	185	231	208	257	266	306	434	601	
	1500	-	23	35	41	53	67	76	76	94	105	130	144	177	184	225	
		1	57	81	68	99	147	166	163	203	184	227	236	271	389	537	
	1200	-	22	34	40	51	65	73	73	92	103	126	141	174	182	222	
		1	49	70	58	85	126	141	140	175	159	195	206	236	342	471	
	1000	-	21	32	38	48	62	70	71	89	100	123	137	169	178	217	
		1	41	59	50	72	107	120	120	150	137	169	178	203	297	408	
	900	-	20	31	37	47	61	68	69	86	98	120	135	166	175	213	
		1	38	55	46	67	100	112	112	140	129	158	167	191	280	384	
	750	-	19	30	35	45	58	64	66	83	94	115	130	159	170	206	
		1	33	48	40	58	86	96	98	122	112	137	146	167	246	338	

SELECTION Parallel Shaft Triple Reduction Nominal Reduction Ratio 20 ▶ 25

Size of Reducer 9095	9100	9105	9110	9115	9118	9121	9126	9128	9131	9136	L.Speed Shaft Speed r/min	H.Speed Shaft Speed r/min	Nominal Reduction Ratio
	20.812		19.984								Exact Reduction Ratio		
*	1100	*	1500	*							**90**	**1800**	
*	922	*	1290	*							**75**	**1500**	
*	742	*	1070	*							**60**	**1200**	**20**
*	620	*	919	*							**50**	**1000**	
*	559	*	838	*							**45**	**900**	
*	468	*	701	*							**38**	**750**	
22.841	22.335	22.781	22.930	22.648					21.793	21.793	Exact Reduction Ratio		
758	981	1140	1340	1500							**80**	**1800**	
650	821	982	1140	1290					3290※	3430※	**67**	**1500**	
539	660	801	919	1070					2650※	2840※	**54**	**1200**	**22.4**
462	552	670	769	919					2220※	2440※	**45**	**1000**	
423	498	605	693	841					2000	2230	**40**	**900**	
355	416	506	580	708					1670	1910	**33**	**750**	
24.782	25.651	24.717	24.630	25.908	25.313				24.930	24.930	Exact Reduction Ratio		
713	898	1060	1250	1340	1590						**72**	**1800**	
612	752	888	1080	1150	1400				2890※	3060※	**60**	**1500**	
497	604	714	895	954	1190				2320※	2530※	**48**	**1200**	**25**
416	505	597	757	812	1050				1940※	2170※	**40**	**1000**	
375	456	538	683	732	955				1750	1990	**36**	**900**	
313	381	450	571	612	796				1470	1710	**30**	**750**	
B-146	B-146	B-146	B-146	B-146	B-148				B-150	B-150	Horizontal	Dimension Tables	
B-172	B-172	B-172	B-172	B-172							Vertical		
											Upright		

* marked models are double reduction units. Refer to B-108 and B-109.

Notes

1. For ※ marked values, the forced oil lubrication is required at continuous operation.

2. Consult us when the high speed shaft speed is over 1800r/min.

3. When the high speed shaft speed is not shown in the table, find it by the interpolation method.

4. When the high speed shaft speed (N) is lower than 750r/min, find the mechanical power rating (P_N) according to the following formula.

$$P_N = P_{750} \times \frac{N}{750}$$

5. Shown in the table are the ratings for the slow speed shaft.

6. Refer to B132-B135 for the allowable radial and axial load on each shaft.

Size of Reducer 9095	9100	9105	9110	9115	9118	9121	9126	9128	9131	9136	Number of Cooling Fans	H.Speed Shaft Speed r/min	Nominal Reduction Ratio
264	296	333	391	429	481				663	663	-	**1800**	Triple Reduction Horizontal Type 20 ▼ 25
603	651	713	813	867	794				1095	1095	1		
267	301	340	399	436	486				701	701	-	**1500**	
545	590	647	738	784	801				1157	1157	1		
266	301	340	397	435	481				723	723	-	**1200**	
481	524	575	653	694	794				1193	1193	1		
262	297	336	391	428	472				726	726	-	**1000**	
419	458	503	569	605	779				1199	1199	1		
258	294	332	386	423	465				724	724	-	**900**	
396	433	475	538	572	768				1195	1195	1		
250	285	322	375	410	451				714	714	-	**750**	
349	383	421	475	506	744				1178	1178	1		
238	265	298	348	386							-	**1800**	Triple Reduction Vertical Type 20 ▼ 25
248	278	313	367	404							-	**1500**	
252	285	321	377	412							-	**1200**	
251	285	321	375	411							-	**1000**	
249	283	319	372	408							-	**900**	
243	277	313	364	399							-	**750**	
											- 1	**1800**	Triple Reduction Upright Type 20 ▼ 25
											- 1	**1500**	
											- 1	**1200**	
											- 1	**1000**	
											- 1	**900**	
											- 1	**750**	

Ambient Temperature ℃	Temperature Correction Factor Without Fan	With Fan
20	1.00	1.00
30	0.85	0.87
40	0.70	0.73
50	0.55	0.60

Notes

1. Shown in the table are the ratings for models without a fan cooling unit and those with a fan. (-: none fan, 1: with a fan)

2. The values are applicable to continuous operation at ambient temperatures of 20 °C or less. When the temperature is out of the range, refer to the temperature correction factor shown above.

3. When the high speed shaft speed is not shown in the table, find it by interpolation method.

SELECTION Parallel Shaft Triple Reduction Nominal Reduction Ratio 28 ▶ 35.5

MECHANICAL POWER RATING (kW)

Nominal Reduction Ratio	H.Speed Shaft Speed r/min	L.Speed Shaft Speed r/min	Size of Reducer 9015	9025	9030	9035	9040	9045	9050	9055	9060	9065	9070	9075	9080	9085	9090
28	Exact Reduction Ratio		28.565	27.764	27.350	27.481	28.269	28.761	29.227	27.426	28.995	27.231	28.105	27.880	26.961	26.838	27.992
	1800	64	17.4	28.0	44	58	65	84	97	132	154	209	249	329	395	502	558
	1500	54	14.5	23.4	37	48	54	70	81	111	129	175	208	275	330	420	467
	1200	43	11.7	18.8	29.7	39	43	56	65	89	103	140	167	221	265	337	375
	1000	36	9.7	15.7	24.8	32	36	47	54	74	86	117	140	185	222	282	314
	900	32	8.8	14.1	22.3	29.5	32	42	49	67	78	106	126	167	200	254	283
	750	27	7.3	11.8	18.6	24.6	27	35	41	56	65	88	105	139	167	212	236
31.5	Exact Reduction Ratio		31.401	31.905	32.876	31.625	31.213	31.498	30.855	31.992	29.905	31.202	31.500	31.056	31.601	29.792	31.855
	1800	57	16.9	26.1	38	51	63	81	98	126	163	208	239	315	355	481	511
	1500	48	14.1	21.8	31	42	52	68	82	105	136	174	200	264	297	402	427
	1200	38	11.3	17.4	25.5	34	42	54	66	84	109	140	160	212	238	323	343
	1000	32	9.4	14.5	21.3	28.8	35	45	55	71	91	117	134	177	199	270	287
	900	29	8.5	13.1	19.2	25.9	31	40	49	64	82	105	121	159	179	244	259
	750	24	7.1	10.9	16.0	21.7	26.6	34	41	53	69	88	101	133	150	203	216
35.5	Exact Reduction Ratio		36.321	36.406	35.438	34.383	35.617	35.833	35.127	35.942	34.848	35.686	35.294	34.850	34.854	32.712	34.652
	1800	51	13.7	21.4	34	46	51	68	81	101	128	160	199	265	307	413	453
	1500	42	11.5	17.9	28.6	39	43	57	68	85	107	134	167	221	257	346	379
	1200	34	9.2	14.4	23.0	31	34	45	54	68	86	107	134	178	206	278	304
	1000	28	7.7	12.0	19.2	26.2	29.0	38	45	57	72	90	112	148	172	232	254
	900	25	6.9	10.8	17.3	23.6	26.1	34	41	51	65	81	101	134	155	209	229
	750	21	5.8	9.0	14.4	19.7	21.8	28.8	34	43	54	67	84	112	130	175	191
Dimension Tables		Horizontal	B-142	B-142	B-142	B-142	B-142	B-142	B-142	B-142	B-144	B-144	B-144	B-144	B-144	B-144	B-146
		Vertical	B-168	B-168	B-168	B-168	B-168	B-168	B-168	B-168	B-170	B-170	B-170	B-170	B-170	B-170	B-172
		Upright	B-184	B-184	B-184	B-184	B-184	B-184	B-184	B-184	B-186	B-186	B-186	B-186	B-186	B-186	

THERMAL POWER RATING (kW)

Nominal Reduction Ratio	H.Speed Shaft Speed r/min	Number of Cooling Fans	Size of Reducer 9015	9025	9030	9035	9040	9045	9050	9055	9060	9065	9070	9075	9080	9085	9090
Triple Reduction Horizontal Type 28 ▼ 35.5	1800	-	21	32	39	49	58	70	74	92	104	124	140	171	177	218	230
		1	60	84	72	104	142	172	179	222	203	243	258	295	422	586	545
	1500	-	21	31	38	48	56	69	72	90	102	123	137	170	176	218	229
		1	51	72	62	91	122	150	156	194	178	215	226	260	372	521	484
	1200	-	19	30	36	46	53	66	69	87	98	119	133	165	171	214	225
		1	43	61	52	77	103	128	132	166	152	184	194	225	322	454	421
	1000	-	18	28	34	44	51	64	66	84	94	115	128	161	166	208	219
		1	36	51	44	65	87	110	112	142	129	158	166	193	277	392	363
	900	-	18	27	33	43	49	62	64	82	92	113	125	157	162	205	215
		1	33	48	41	61	81	102	104	132	121	148	155	181	259	369	341
	750	-	17	26	31	41	46	59	61	78	87	108	119	151	156	197	206
		1	28	41	35	52	69	88	90	115	104	129	135	158	226	323	298
Triple Reduction Vertical Type 28 ▼ 35.5	1800	-	21	31	37	47	55	68	70	87	98	117	132	161	165	201	211
	1500	-	20	30	36	46	54	67	69	86	97	117	131	162	167	205	217
	1200	-	19	29	35	45	52	65	67	84	95	115	129	160	165	205	216
	1000	-	18	27	33	43	50	62	65	82	92	112	125	156	161	202	212
	900	-	17	27	32	42	48	61	63	80	90	110	122	153	158	199	209
	750	-	16	25	30	40	46	58	60	76	86	106	117	148	152	193	202
Triple Reduction Upright Type 28 ▼ 35.5	1800	-	21	32	39	49	65	70	74	91	104	124	140	170	177	216	
		1	60	84	72	104	158	172	179	220	203	243	258	292	422	582	
	1500	-	21	31	38	48	62	69	72	89	102	123	137	169	176	216	
		1	51	72	62	90	136	150	156	193	178	215	226	258	372	518	
	1200	-	19	30	36	46	59	66	69	86	98	119	133	165	171	213	
		1	43	61	52	77	115	128	132	165	152	184	194	224	322	452	
	1000	-	18	28	34	44	56	64	66	83	94	115	128	160	166	208	
		1	36	51	44	65	97	110	112	141	129	158	166	193	277	391	
	900	-	18	27	33	43	55	62	64	81	92	113	125	157	162	204	
		1	33	48	41	61	90	102	104	132	121	148	155	181	259	368	
	750	-	17	26	31	41	51	59	61	77	87	108	119	151	156	197	
		1	28	41	35	52	77	88	90	114	104	129	135	158	226	323	

SELECTION Parallel Shaft Triple Reduction Nominal Reduction Ratio 28 ▶ 35.5

Size of Reducer 9095	9100	9105	9110	9115	9118	9121	9126	9128	9131	9136	L.Speed Shaft Speed r/min	H.Speed Shaft Speed r/min	Nominal Reduction Ratio
28.552	27.527	28.078	28.261	27.914		29.333	29.333	28.679	28.315	28.315	Exact Reduction Ratio		
624	800	957	1110	1260		1870※	2000※	2640※			**64**	**1800**	
535	669	813	932	1080		1570※	1720※	2230※	2550※	2750※	**54**	**1500**	
444	538	653	749	896		1260	1430	1790※	2050※	2280※	**43**	**1200**	**28**
378	450	546	626	768		1050	1220	1500	1720※	1960※	**36**	**1000**	
341	405	492	565	703		954	1110	1350	1550	1790	**32**	**900**	
285	339	412	472	603		798	929	1130	1290	1530	**27**	**750**	
30.978	32.067	30.463	30.789	31.932	31.197	31.826	31.826	31.115	32.390	32.390	Exact Reduction Ratio		
588	722	865	1040	1120	1530	1730※	1870※	2460※			**57**	**1800**	
497	604	724	898	963	1280	1450※	1600※	2060※	2240※	2450※	**48**	**1500**	
400	485	581	727	791	1030	1160	1330	1660※	1800※	2030※	**38**	**1200**	**31.5**
334	406	486	608	661	865	977	1130	1380	1500※	1740※	**32**	**1000**	
301	366	438	548	596	780	881	1020	1250	1360	1590	**29**	**900**	
252	306	366	458	499	653	736	857	1040	1130	1340	**24**	**750**	
35.345	34.412	35.100	35.329	34.895	36.870	36.000	36.000	36.500	34.341	34.341	Exact Reduction Ratio		
525	643	781	895	1040	1300	1530※	1690※	2110※			**51**	**1800**	
450	538	653	749	899	1090	1280※	1450※	1760※	2110※	2340※	**42**	**1500**	
366	432	525	602	745	878	1030	1200	1420※	1700※	1940※	**34**	**1200**	**35.5**
306	361	439	503	639	735	866	1000	1180	1420※	1660※	**28**	**1000**	
276	325	395	454	581	662	780	908	1070	1280	1510	**25**	**900**	
231	272	330	379	485	554	652	759	895	1070	1260	**21**	**750**	
B-146 B-172	B-146 B-172	B-146 B-172	B-146 B-172	B-146 B-172	B-148	B-148	B-148	B-150	B-150	B-150	Horizontal Vertical Upright	Dimension Tables	

Notes

1. For ※ marked values, the forced oil lubrication is required at continuous operation.
2. Consult us when the high speed shaft speed is over 1800r/min.
3. When the high speed shaft speed is not shown in the table, find it by the interpolation method.
4. When the high speed shaft speed (N) is lower than 750r/min, find the mechanical power rating (P_N) according to the following formula.

$$P_N = P_{750} \times \frac{N}{750}$$

5. Shown in the table are the ratings for the slow speed shaft.
6. Refer to B132-B135 for the allowable radial and axial load on each shaft.

Size of Reducer 9095	9100	9105	9110	9115	9118	9121	9126	9128	9131	9136	Number of Cooling Fans	H.Speed Shaft Speed r/min	Nominal Reduction Ratio
250	294	323	378	417	467	508	508	564	657	657	-	**1800**	Triple Reduction Horizontal Type 28 ▼ 35.5
572	647	691	786	842	770	838	838	931	1084	1084	1		
248	295	325	377	421	466	515	515	577	682	682	-	**1500**	
506	577	618	697	757	769	849	849	952	1125	1125	1		
243	290	319	369	415	458	512	512	579	689	689	-	**1200**	
439	504	538	607	661	756	845	845	955	1137	1137	1		
236	283	310	359	403	448	504	504	572	683	683	-	**1000**	
378	436	465	523	570	739	831	831	943	1128	1128	1		
231	278	305	353	395	440	497	497	565	677	677	-	**900**	
355	410	437	491	535	726	820	820	933	1117	1117	1		
222	268	294	340	380	426	483	483	551	661	661	-	**750**	
310	360	383	431	468	702	796	796	909	1091	1091	1		
231	267	292	344	380							-	**1800**	Triple Reduction Vertical Type 28 ▼ 35.5
235	277	304	356	393							-	**1500**	
233	277	306	355	398							-	**1200**	
229	273	301	348	391							-	**1000**	
225	270	296	343	385							-	**900**	
218	262	287	332	373							-	**750**	
											- 1	**1800**	Triple Reduction Upright Type 28 ▼ 35.5
											- 1	**1500**	
											- 1	**1200**	
											- 1	**1000**	
											- 1	**900**	
											- 1	**750**	

Ambient Temperature ℃	Temperature Correction Factor Without Fan	With Fan
20	1.00	1.00
30	0.85	0.87
40	0.70	0.73
50	0.55	0.60

Notes

1. Shown in the table are the ratings for models without a fan cooling unit and those with a fan. (-: none fan, 1: with a fan)
2. The values are applicable to continuous operation at ambient temperatures of 20 °C or less. When the temperature is out of the range, refer to the temperature correction factor shown above.
3. When the high speed shaft speed is not shown in the table, find it by interpolation method.

SELECTION Parallel Shaft Triple Reduction Nominal Reduction Ratio 40 ▶ 50

MECHANICAL POWER RATING (kW)

Nominal Reduction Ratio	H.Speed Shaft Speed r/min	L.Speed Shaft Speed r/min	Size of Reducer 9015	9025	9030	9035	9040	9045	9050	9055	9060	9065	9070	9075	9080	9085	9090
40	Exact Reduction Ratio		38.980	39.444	41.134	40.976	38.889	39.686	40.435	38.450	39.190	37.500	39.375	39.000	38.519	38.514	39.818
	1800	45	13.6	21.2	30	39	50	64	75	105	125	174	192	252	292	374	411
	1500	38	11.4	17.7	25.5	33	42	53	63	88	104	145	160	211	244	313	343
	1200	30	9.1	14.2	20.4	26.7	34	42	50	70	84	116	129	169	196	251	276
	1000	25	7.6	11.9	17.1	22.3	28.5	35	42	59	70	96	107	141	164	210	230
	900	23	6.9	10.7	15.4	20.1	25.6	32	38	53	63	87	97	127	147	189	207
	750	19	5.7	8.9	12.8	16.8	21.4	26.7	31	44	52	72	81	106	123	158	173
45	Exact Reduction Ratio		45.088	45.009	44.338	44.550	44.375	45.148	46.033	43.197	45.667	42.889	44.118	43.765	42.484	42.289	43.316
	1800	40	11.1	17.4	27.5	36	41	54	62	85	98	134	160	212	253	321	364
	1500	33	9.3	14.5	22.9	30	34	45	52	71	82	112	134	177	211	269	304
	1200	27	7.4	11.6	18.4	24.3	27.9	36	41	57	66	90	107	142	170	216	244
	1000	22	6.2	9.7	15.4	20.3	23.3	30	34	47	55	75	89	118	142	180	204
	900	20	5.6	8.7	13.8	18.3	21.0	27.4	31	42	49	67	81	107	128	162	184
	750	17	4.7	7.3	11.5	15.3	17.5	22.9	26.2	35	41	56	67	89	106	135	153
50	Exact Reduction Ratio				51.141	51.268	49.248	49.444	49.634	50.388	48.825	49.144	51.188	48.750	51.845	46.944	51.911
	1800	36			24.6	31	40	51	61	81	100	133	148	203	218	308	316
	1500	30			20.5	26.7	33	43	51	67	84	111	124	169	182	257	264
	1200	24			16.5	21.4	27.0	34	41	54	67	89	99	136	146	207	212
	1000	20			13.8	17.9	22.5	28.9	34	45	56	74	83	113	122	173	177
	900	18			12.4	16.1	20.3	26.0	31	40	50	67	74	102	110	155	160
	750	15			10.3	13.4	16.9	21.6	26.0	34	42	56	62	85	92	130	133
Dimension Tables		Horizontal	B-142	B-142	B-142	B-142	B-142	B-142	B-142	B-142	B-144	B-144	B-144	B-144	B-144	B-144	B-146
		Vertical	B-168	B-168	B-168	B-168	B-168	B-168	B-168	B-168	B-170	B-170	B-170	B-170	B-170	B-170	B-172
		Upright	B-184	B-184	B-184	B-184	B-184	B-184	B-184	B-184	B-186	B-186	B-186	B-186	B-186	B-186	

THERMAL POWER RATING (kW)

Nominal Reduction Ratio	H.Speed Shaft Speed r/min	Number of Cooling Fans	Size of Reducer 9015	9025	9030	9035	9040	9045	9050	9055	9060	9065	9070	9075	9080	9085	9090
Triple Reduction Horizontal Type 40 ▼ 50	1800	-	20	31	34	46	53	66	66	83	92	113	125	157	159	201	210
		1	57	80	63	97	130	162	159	200	180	221	230	270	377	540	497
	1500	-	20	30	33	44	51	63	64	80	89	110	121	154	155	198	206
		1	49	69	54	83	111	137	137	173	155	192	199	235	328	473	434
	1200	-	18	28	30	42	48	60	60	77	84	106	115	148	148	191	198
		1	41	58	44	70	92	116	115	146	130	164	168	201	279	406	371
	1000	-	17	27	29	39	45	57	57	73	80	101	110	142	142	185	191
		1	34	49	37	58	77	98	96	124	110	139	142	171	237	348	317
	900	-	17	26	27	38	43	55	55	71	78	99	106	138	138	180	186
		1	31	45	34	54	71	90	89	115	102	130	132	159	220	325	295
	750	-	16	24	25	36	40	52	51	67	73	94	101	132	131	172	177
		1	27	39	29	46	60	78	76	99	87	112	113	138	190	283	256
Triple Reduction Vertical Type 40 ▼ 50	1800	-	20	29	33	44	51	64	64	80	88	108	119	150	151	190	199
	1500	-	19	29	32	43	50	62	62	78	86	107	117	148	149	189	198
	1200	-	18	27	30	41	47	59	59	75	82	103	112	144	144	185	192
	1000	-	17	26	28	39	44	56	56	72	78	99	108	139	139	180	186
	900	-	16	25	27	37	43	54	54	70	76	97	105	136	136	177	182
	750	-	15	24	25	35	40	51	51	66	72	92	99	130	129	170	174
Triple Reduction Upright Type 40 ▼ 50	1800	-	20	31	34	46	59	66	66	83	92	113	125	157	159	201	
		1	57	80	63	97	145	162	159	200	180	221	230	270	377	540	
	1500	-	20	30	33	44	57	63	64	80	89	110	121	154	155	198	
		1	49	69	54	83	125	137	137	173	155	192	199	235	328	473	
	1200	-	18	28	30	42	54	60	60	77	84	106	115	148	148	191	
		1	41	58	44	70	105	116	115	146	130	164	168	201	279	406	
	1000	-	17	27	29	39	52	57	57	73	80	101	110	142	142	185	
		1	34	49	37	58	88	98	96	124	110	139	142	171	237	348	
	900	-	17	26	27	38	50	55	55	71	78	99	106	138	138	180	
		1	31	45	34	54	82	90	89	115	102	130	132	159	220	325	
	750	-	16	24	25	36	47	52	51	67	73	94	101	132	131	172	
		1	27	39	29	46	70	78	76	99	87	112	113	138	190	283	

SELECTION Parallel Shaft Triple Reduction Nominal Reduction Ratio 40 ▶ 50

Size of Reducer 9095	9100	9105	9110	9115	9118	9121	9126	9128	9131	9136	L.Speed Shaft Speed r/min	H.Speed Shaft Speed r/min	Nominal Reduction Ratio
38.349	39.522	38.082	37.948	39.918	39.000	39.059	39.059	39.601	39.284	39.284	Exact Reduction Ratio		
482	589	695	875	933	1190	1420※	1570※	1940※			**45**	**1800**	
403	492	581	738	791	1030	1180※	1350※	1630※	1850※	2080※	**38**	**1500**	
324	395	467	593	635	831	955	1110	1310※	1490※	1730※	**30**	**1200**	**40**
271	330	390	495	531	695	799	930	1090	1240※	1470※	**25**	**1000**	
244	298	352	447	479	627	720	839	988	1120	1320	**23**	**900**	
204	249	294	373	400	524	602	701	826	941	1110	**19**	**750**	
44.182	42.412	43.261	43.543	43.008	46.838	45.900	45.900	44.321	43.686	43.686	Exact Reduction Ratio		
432	524	636	730	876	1030	1210※	1380※	1740※			**40**	**1800**	
366	438	532	610	751	865	1010※	1180※	1460※	1670※	1910※	**33**	**1500**	
294	352	427	490	623	695	816	949	1170※	1340※	1580※	**27**	**1200**	**45**
246	294	357	410	524	581	682	794	981	1120※	1320※	**22**	**1000**	
222	265	322	369	473	523	615	715	885	1010	1190	**20**	**900**	
185	221	269	308	395	437	514	598	740	848	1000	**17**	**750**	
47.936	50.361	46.936	48.355	49.198	48.067	49.800	49.800	48.087	49.974	49.974	Exact Reduction Ratio		
388	464	566	695	770	1000	1120※	1280※	1610※			**36**	**1800**	
324	388	474	581	644	843	937※	1090※	1340※	1460※	1700※	**30**	**1500**	
260	311	380	467	517	677	753	876	1080※	1170※	1390※	**24**	**1200**	**50**
217	260	318	390	432	566	629	732	906	986※	1160※	**20**	**1000**	
196	234	286	352	390	510	567	660	817	889	1040	**18**	**900**	
163	196	239	294	326	426	474	552	682	742	876	**15**	**750**	
B-146 B-172	B-146 B-172	B-146 B-172	B-146 B-172	B-146 B-172	B-148	B-148	B-148	B-150	B-150	B-150	Horizontal Vertical Upright	Dimension Tables	

Notes

1. For ※ marked values, the forced oil lubrication is required at continuous operation.

2. Consult us when the high speed shaft speed is over 1800r/min.

3. When the high speed shaft speed is not shown in the table, find it by the interpolation method.

4. When the high speed shaft speed (N) is lower than 750r/min, find the mechanical power rating (P_N) according to the following formula.

$$P_N = P_{750} \times \frac{N}{750}$$

5. Shown in the table are the ratings for the slow speed shaft.

6. Refer to B132-B135 for the allowable radial and axial load on each shaft.

Size of Reducer 9095	9100	9105	9110	9115	9118	9121	9126	9128	9131	9136	Number of Cooling Fans	H.Speed Shaft Speed r/min	Nominal Reduction Ratio
238	274	307	363	396	440	488	488	545	631	631	-	**1800**	Triple Reduction Horizontal Type 40 ▼ 50
545	603	656	756	801	726	805	805	899	1042	1042	1		
236	270	305	357	393	434	489	489	550	641	641	-	**1500**	
481	529	581	661	706	715	807	807	908	1058	1058	1		
230	262	299	344	383	421	482	482	546	639	639	-	**1200**	
416	454	505	566	611	695	795	795	901	1055	1055	1		
223	253	291	332	371	408	471	471	537	630	630	-	**1000**	
358	389	435	483	525	673	777	777	886	1039	1039	1		
219	247	285	324	364	399	463	463	529	622	622	-	**900**	
335	364	409	451	493	659	764	764	873	1026	1026	1		
210	236	275	309	350	383	448	448	514	604	604	-	**750**	
293	316	358	392	431	632	739	739	847	997	997	1		
223	259	286	340	373							-	**1800**	Triple Reduction Vertical Type 40 ▼ 50
225	258	289	343	374							-	**1500**	
222	253	288	334	370							-	**1200**	
217	246	282	324	362							-	**1000**	
213	241	278	317	356							-	**900**	
206	232	269	304	343							-	**750**	
											- 1	**1800**	Triple Reduction Upright Type 40 ▼ 50
											- 1	**1500**	
											- 1	**1200**	
											- 1	**1000**	
											- 1	**900**	
											- 1	**750**	

Ambient Temperature ℃	Temperature Correction Factor Without Fan	With Fan
20	1.00	1.00
30	0.85	0.87
40	0.70	0.73
50	0.55	0.60

Notes

1. Shown in the table are the ratings for models without a fan cooling unit and those with a fan. (-: none fan, 1: with a fan)

2. The values are applicable to continuous operation at ambient temperatures of 20 °C or less. When the temperature is out of the range, refer to the temperature correction factor shown above.

3. When the high speed shaft speed is not shown in the table, find it by interpolation method.

SELECTION Parallel Shaft Triple Reduction Nominal Reduction Ratio 56 ▶ 71

MECHANICAL POWER RATING (kW)

Nominal Reduction Ratio	H.Speed Shaft Speed r/min	L.Speed Shaft Speed r/min	Size of Reducer 9015	9025	9030	9035	9040	9045	9050	9055	9060	9065	9070	9075	9080	9085	9090
56	Exact Reduction Ratio				55.125	55.739	56.195	56.250	56.507	56.608	56.894	56.206	57.353	54.706	57.182	51.547	56.471
	1800	32			22.1	29.1	33	43	50	65	79	102	123	170	189	264	280
	1500	27			18.5	24.3	27.6	36	42	54	66	86	103	142	158	221	234
	1200	21			14.8	19.5	22.1	29.3	34	43	53	69	83	114	126	177	188
	1000	18			12.4	16.2	18.5	24.5	28.5	36	44	57	69	95	105	148	157
	900	16			11.1	14.6	16.6	22.1	25.6	32	40	51	62	86	95	133	141
	750	13			9.3	12.2	13.9	18.4	21.4	27.4	33	43	52	71	79	111	118
63	Exact Reduction Ratio				63.986	63.741	61.358	62.615	65.045	61.852	63.984	61.225	63.984	63.375	63.194	63.186	64.889
	1800	29			19.7	25.7	32	40	47	66	77	106	119	156	179	230	254
	1500	24			16.5	21.5	27.1	33	39	55	64	88	99	131	150	192	212
	1200	19			13.2	17.2	21.7	27.1	31	44	51	71	79	105	120	154	170
	1000	16			11.0	14.4	18.1	22.6	26.5	37	43	59	66	87	100	129	142
	900	14			9.9	13.0	16.3	20.3	23.9	33	38	53	60	79	90	116	128
	750	12			8.3	10.8	13.6	16.9	19.9	27.8	32	44	50	66	75	97	107
71	Exact Reduction Ratio				68.971	69.300	70.014	71.234	74.051	69.488	74.559	70.024	71.691	71.118	69.700	69.381	70.588
	1800	25			17.7	23.4	26.6	34	39	53	60	82	99	131	155	197	225
	1500	21			14.8	19.6	22.2	29.0	32	44	50	69	83	109	130	165	188
	1200	17			11.9	15.7	17.8	23.2	26.1	35	40	55	66	88	104	132	151
	1000	14			9.9	13.1	14.8	19.4	21.8	29.7	34	46	55	73	87	110	126
	900	13			8.9	11.8	13.4	17.5	19.6	26.8	30	41	50	66	78	99	113
	750	11			7.4	9.8	11.2	14.6	16.4	22.4	25.6	34	41	55	65	83	95
Dimension Tables		Horizontal			B-142	B-142	B-142	B-142	B-142	B-142	B-144	B-144	B-144	B-144	B-144	B-144	B-146
		Vertical			B-168	B-168	B-168	B-168	B-168	B-168	B-170	B-170	B-170	B-170	B-170	B-170	B-172
		Upright			B-184	B-184	B-184	B-184	B-184	B-184	B-186	B-186	B-186	B-186	B-186	B-186	

THERMAL POWER RATING (kW)

Nominal Reduction Ratio	H.Speed Shaft Speed r/min	Number of Cooling Fans	Size of Reducer 9015	9025	9030	9035	9040	9045	9050	9055	9060	9065	9070	9075	9080	9085	9090
Triple Reduction Horizontal Type 56 ▼ 71	1800	-			32	39	49	59	62	78	86	106	119	146	152	186	198
		1			59	83	120	145	150	188	169	208	219	250	362	500	469
	1500	-			30	37	47	57	60	75	83	102	115	141	148	181	194
		1			50	70	102	124	128	161	145	178	189	216	314	432	409
	1200	-			28	35	44	53	56	70	79	96	109	134	142	172	187
		1			42	58	85	103	107	134	122	149	160	182	267	366	350
	1000	-			27	33	41	50	53	66	75	92	104	127	136	165	180
		1			34	48	71	86	90	112	103	126	135	153	227	310	298
	900	-			26	31	40	48	51	64	73	89	101	123	132	160	175
		1			32	44	65	79	83	104	95	117	125	142	211	289	278
	750	-			24	29	37	45	48	60	68	83	95	116	125	152	167
		1			27	38	55	67	71	89	82	99	108	122	182	249	241
Triple Reduction Vertical Type 56 ▼ 71	1800	-			31	38	47	58	60	75	83	102	114	140	145	178	188
	1500	-			30	36	46	55	58	73	81	99	111	137	143	175	187
	1200	-			28	34	43	52	55	69	77	94	107	131	138	168	182
	1000	-			26	32	41	49	52	65	74	90	102	125	133	162	176
	900	-			25	31	39	47	51	63	72	87	100	122	130	157	172
	750	-			24	29	37	44	48	59	68	82	94	115	124	150	164
Triple Reduction Upright Type 56 ▼ 71	1800	-			32	39	54	59	62	78	86	106	119	146	152	186	
		1			59	83	133	145	150	188	169	208	219	250	362	500	
	1500	-			30	37	52	57	60	75	83	102	115	141	148	181	
		1			50	70	113	124	128	161	145	178	189	216	314	432	
	1200	-			28	35	49	53	56	70	79	96	109	134	142	172	
		1			42	58	94	103	107	134	122	149	160	182	267	366	
	1000	-			27	33	46	50	53	66	75	92	104	127	136	165	
		1			34	48	79	86	90	112	103	126	135	153	227	310	
	900	-			26	31	44	48	51	64	73	89	101	123	132	160	
		1			32	44	72	79	83	104	95	117	125	142	211	289	
	750	-			24	29	41	45	48	60	68	83	95	116	125	152	
		1			27	38	61	67	71	89	82	99	108	122	182	249	

SELECTION Parallel Shaft Triple Reduction Nominal Reduction Ratio 56 ▶ 71

Size of Reducer 9095	9100	9105	9110	9115	9118	9121	9126	9128	9131	9136	L.Speed Shaft Speed r/min	H.Speed Shaft Speed r/min	Nominal Reduction Ratio
57.600	54.044	55.125	55.485	54.803	56.807	57.600	57.600	57.487	53.842	53.842	Exact Reduction Ratio		
338	413	502	575	717	856	972※	1130※	1350※			**32**	**1800**	
282	345	419	481	615	716	812※	946※	1130※	1360※	1600※	**27**	**1500**	
226	277	336	386	494	575	652	759	909※	1090※	1290※	**21**	**1200**	**56**
189	231	281	322	413	480	545	635	760	916※	1080※	**18**	**1000**	
170	208	253	291	372	433	492	572	685	826	974	**16**	**900**	
142	174	212	243	311	362	411	478	572	690	814	**13**	**750**	
62.494	62.070	59.809	59.598	62.691	61.933	62.494	62.494	62.372	61.592	61.592	Exact Reduction Ratio		
299	378	446	566	607	786	897※	1040※	1240※			**29**	**1800**	
249	316	373	473	508	657	750※	873※	1040※	1190※	1410※	**24**	**1500**	
200	253	299	380	408	528	602	701	839※	960※	1130※	**19**	**1200**	**63**
167	212	250	317	340	441	503	586	701	802※	946※	**16**	**1000**	
151	191	225	286	307	397	454	528	632	723	853	**14**	**900**	
126	159	188	239	256	332	379	441	528	604	713	**12**	**750**	
72.000	66.609	67.941	68.385	67.544	73.193	72.000	72.000	70.853	72.791	72.791	Exact Reduction Ratio		
271	336	408	468	599	667	780※	908※	1100※			**25**	**1800**	
226	281	341	391	501	558	652※	759※	922※	1010※	1190※	**21**	**1500**	
182	225	274	314	402	448	524	610	740※	814※	961※	**17**	**1200**	**71**
152	188	229	262	336	374	438	509	618	681※	803※	**14**	**1000**	
137	170	206	236	303	337	394	459	557	613※	724	**13**	**900**	
114	141	172	197	253	281	329	383	466	512	604	**11**	**750**	
B-146	B-146	B-146	B-146	B-146	B-148	B-148	B-148	B-150	B-150	B-150	Horizontal	Dimension Tables	
B-172	B-172	B-172	B-172	B-172							Vertical Upright		

Notes

1. For ※ marked values, the forced oil lubrication is required at continuous operation.
2. Consult us when the high speed shaft speed is over 1800r/min.
3. When the high speed shaft speed is not shown in the table, find it by the interpolation method.
4. When the high speed shaft speed (N) is lower than 750r/min, find the mechanical power rating (P_N) according to the following formula.

$$P_N = P_{750} \times \frac{N}{750}$$

5. Shown in the table are the ratings for the slow speed shaft.
6. Refer to B132-B135 for the allowable radial and axial load on each shaft.

Size of Reducer 9095	9100	9105	9110	9115	9118	9121	9126	9128	9131	9136	Number of Cooling Fans	H.Speed Shaft Speed r/min	Nominal Reduction Ratio
214	262	288	337	378	422	448	448	512	591	591	-	**1800**	Triple Reduction Horizontal Type 56 ▼ 71
491	576	617	700	764	696	739	739	845	975	975	1		
210	258	283	329	370	413	443	443	509	592	592	-	**1500**	
427	504	539	610	664	681	731	731	840	977	977	1		
201	249	273	318	356	398	432	432	498	583	583	-	**1200**	
364	433	462	522	567	657	712	712	821	962	962	1		
193	241	264	306	342	384	418	418	484	570	570	-	**1000**	
310	371	395	445	483	633	690	690	799	940	940	1		
188	235	257	298	333	375	410	410	475	560	560	-	**900**	
289	346	369	415	451	618	676	676	784	924	924	1		
179	225	246	284	318	358	393	393	457	540	540	-	**750**	
250	301	320	361	391	591	648	648	754	891	891	1		
205	248	274	321	362							-	**1800**	Triple Reduction Vertical Type 56 ▼ 71
202	247	272	318	357							-	**1500**	
196	242	266	309	347							-	**1200**	
189	235	258	299	335							-	**1000**	
185	230	252	293	328							-	**900**	
177	221	242	280	313							-	**750**	
											- 1	**1800**	Triple Reduction Upright Type 56 ▼ 71
											- 1	**1500**	
											- 1	**1200**	
											- 1	**1000**	
											- 1	**900**	
											- 1	**750**	

Ambient Temperature ℃	Temperature Correction Factor Without Fan	With Fan
20	1.00	1.00
30	0.85	0.87
40	0.70	0.73
50	0.55	0.60

Notes

1. Shown in the table are the ratings for models without a fan cooling unit and those with a fan. (-: none fan, 1: with a fan)
2. The values are applicable to continuous operation at ambient temperatures of 20 °C or less. When the temperature is out of the range, refer to the temperature correction factor shown above.
3. When the high speed shaft speed is not shown in the table, find it by interpolation method.

SELECTION Parallel Shaft Triple Reduction Nominal Reduction Ratio 80 ▶ 90

MECHANICAL POWER RATING (kW)

Nominal Reduction Ratio	H.Speed Shaft Speed r/min	L.Speed Shaft Speed r/min	Size of Reducer 9015	9025	9030	9035	9040	9045	9050	9055	9060	9065	9070	9075	9080	9085	9090
80	Exact Reduction Ratio					79.751		78.012		81.056		80.234		79.219		77.018	77.090
	1800	**23**			*	20.6	*	32	*	50	*	82	*	125	*	189	206
	1500	**19**			*	17.2	*	27.4	*	42	*	68	*	105	*	158	172
	1200	**15**			*	13.8	*	21.9	*	33	*	55	*	84	*	127	138
	1000	**13**			*	11.5	*	18.3	*	28.3	*	45	*	70	*	106	115
	900	**11**			*	10.4	*	16.5	*	25.5	*	41	*	63	*	95	104
	750	**9.4**			*	8.7	*	13.7	*	21.3	*	34	*	53	*	79	87
90	Exact Reduction Ratio					86.706		88.750		91.063		91.765		88.897		84.569	
	1800	**20**			*	18.8	*	27.9	*	40	*	63	*	105	*	162	*
	1500	**17**			*	15.7	*	23.3	*	34	*	53	*	88	*	136	*
	1200	**13**			*	12.6	*	18.7	*	27.3	*	42	*	70	*	109	*
	1000	**11**			*	10.5	*	15.6	*	22.8	*	35	*	59	*	91	*
	900	**10**			*	9.4	*	14.0	*	20.5	*	32	*	53	*	82	*
	750	**8.3**			*	7.9	*	11.7	*	17.1	*	26.7	*	44	*	68	*
Dimension Tables		Horizontal				B-142		B-142		B-142		B-144		B-144		B-144	B-146
		Vertical				B-168		B-168		B-168		B-170		B-170		B-170	B-172
		Upright				B-184		B-184		B-184		B-186		B-186		B-186	

THERMAL POWER RATING (kW)

Nominal Reduction Ratio	H.Speed Shaft Speed r/min	Number of Cooling Fans	Size of Reducer 9015	9025	9030	9035	9040	9045	9050	9055	9060	9065	9070	9075	9080	9085	9090
Triple Reduction Horizontal Type 80 ▼ 90	**1800**	-				37		56		73		100		139		178	202
		1				79		137		177		196		238		479	479
	1500	-				36		54		70		96		134		173	198
		1				67		118		151		167		205		414	417
	1200	-				33		50		66		91		127		165	190
		1				55		97		126		141		173		351	356
	1000	-				31		47		62		86		121		158	183
		1				46		81		106		118		146		297	304
	900	-				30		45		60		83		117		153	178
		1				42		74		97		109		135		276	283
	750	-				28		42		56		78		111		145	170
		1				36		63		83		93		116		238	246
Triple Reduction Vertical Type 80 ▼ 90	**1800**	-				36		55		71		96		134		171	192
	1500	-				35		52		69		93		130		168	190
	1200	-				33		49		65		89		125		161	185
	1000	-				31		47		61		85		119		155	179
	900	-				29		45		59		82		116		151	175
	750	-				27		42		56		77		109		143	167
Triple Reduction Upright Type 80 ▼ 90	**1800**	-				37		56		73		100		139		178	
		1				79		137		177		196		238		479	
	1500	-				36		54		70		96		134		173	
		1				67		118		151		167		205		414	
	1200	-				33		50		66		91		127		165	
		1				55		97		126		141		173		351	
	1000	-				31		47		62		86		121		158	
		1				46		81		106		118		146		297	
	900	-				30		45		60		83		117		153	
		1				42		74		97		109		135		276	
	750	-				28		42		56		78		111		145	
		1				36		63		83		93		116		238	

SELECTION Parallel Shaft Triple Reduction Nominal Reduction Ratio 80 ▶ 90

Size of Reducer 9095	9100	9105	9110	9115	9118	9121	9126	9128	9131	9136	L.Speed Shaft Speed r/min	H.Speed Shaft Speed r/min	Nominal Reduction Ratio
78.118	75.300	73.714	80.819	77.266	75.490	78.118	78.118	76.873			Exact Reduction Ratio		
240	298	363	397	495	647	720※	839※	1010※			**23**	**1800**	
200	249	304	332	413	541	602※	701※	851※			**19**	**1500**	
160	200	244	266	332	434	483	563	683※			**15**	**1200**	**80**
134	167	203	222	277	363	404	470	571			**13**	**1000**	
121	150	183	200	250	327	364	424	514			**11**	**900**	
101	125	153	167	208	273	304	354	430			**9.4**	**750**	
85.313		83.332		91.315	89.216	85.313	85.313	86.903			Exact Reduction Ratio		
220	*	322	*	420	549	661※	769※	902※			**20**	**1800**	
183	*	269	*	351	459	552※	643※	754※			**17**	**1500**	
147	*	216	*	281	368	443	516	605※			**13**	**1200**	**90**
123	*	180	*	235	308	370	431	506			**11**	**1000**	
111	*	162	*	212	277	334	388	456			**10**	**900**	
92	*	135	*	177	231	278	324	380			**8.3**	**750**	
B-146 B-172	B-146 B-172	B-146 B-172	B-146 B-172	B-146 B-172	B-148	B-148	B-148	B-150			Horizontal Vertical Upright	Dimension Tables	

* marked models are quadruple reduction units. Refer to B-120 and B-121.

Notes

1. For ※ marked values, the forced oil lubrication is required at continuous operation.

2. Consult us when the high speed shaft speed is over 1800r/min.

3. When the high speed shaft speed is not shown in the table, find it by the interpolation method.

4. When the high speed shaft speed (N) is lower than 750r/min, find the mechanical power rating (P_N) according to the following formula.

$$P_N = P_{750} \times \frac{N}{750}$$

5. Shown in the table are the ratings for the slow speed shaft.

6. Refer to B132-B135 for the allowable radial and axial load on each shaft.

Size of Reducer 9095	9100	9105	9110	9115	9118	9121	9126	9128	9131	9136	Number of Cooling Fans	H.Speed Shaft Speed r/min	Nominal Reduction Ratio
214	265	283	333	362	399	446	446	500			-	**1800**	Triple Reduction Horizontal Type 80 ▼ 90
490	582	606	693	732	659	735	735	825			1		
209	260	278	326	354	389	441	441	495			-	**1500**	
426	510	530	604	636	642	727	727	817			1		
201	252	269	314	340	373	429	429	482			-	**1200**	
363	438	454	516	543	615	708	708	796			1		
193	243	259	302	327	358	415	415	468			-	**1000**	
309	374	388	440	462	591	685	685	772			1		
188	237	253	295	319	349	406	406	459			-	**900**	
288	350	362	411	431	576	670	670	757			1		
179	227	241	281	304	332	389	389	440			-	**750**	
250	304	315	357	374	548	642	642	726			1		
204	251	269	319	347							-	**1800**	Triple Reduction Vertical Type 80 ▼ 90
202	250	268	315	343							-	**1500**	
196	244	261	306	332							-	**1200**	
189	237	253	296	321							-	**1000**	
185	233	248	290	314							-	**900**	
176	223	238	277	300							-	**750**	
											- 1	**1800**	Triple Reduction Upright Type 80 ▼ 90
											- 1	**1500**	
											- 1	**1200**	
											- 1	**1000**	
											- 1	**900**	
											- 1	**750**	

Ambient Temperature ℃	Temperature Correction Factor Without Fan	With Fan
20	1.00	1.00
30	0.85	0.87
40	0.70	0.73
50	0.55	0.60

Notes

1. Shown in the table are the ratings for models without a fan cooling unit and those with a fan. (-: none fan, 1: with a fan)

2. The values are applicable to continuous operation at ambient temperatures of 20 °C or less. When the temperature is out of the range, refer to the temperature correction factor shown above.

3. When the high speed shaft speed is not shown in the table, find it by interpolation method.

SELECTION Parallel Shaft Quadruple Reduction Nominal Reduction Ratio 80 ▶ 100

MECHANICAL POWER RATING (kW)

Nominal Reduction Ratio	H.Speed Shaft Speed r/min	L.Speed Shaft Speed r/min	Size of Reducer 9015	9025	9030	9035	9040	9045	9050	9055	9060	9065	9070	9075	9080	9085	9090
80	Exact Reduction Ratio				82.394		79.669		79.341		76.744		78.120		79.124		
	1800	23			15.3	*	25.0	*	32	*	50	*	82	*	134	*	*
	1500	19			12.8	*	20.9	*	27.2	*	41	*	68	*	111	*	*
	1200	15			10.3	*	16.7	*	21.7	*	33	*	54	*	89	*	*
	1000	13			8.6	*	13.9	*	18.1	*	27.9	*	45	*	74	*	*
	900	11			7.7	*	12.6	*	16.3	*	25.1	*	41	*	67	*	*
	750	9.4			6.4	*	10.5	*	13.6	*	20.9	*	34	*	55	*	*
90	Exact Reduction Ratio				88.813		90.908		90.326		89.427		87.529		87.269		88.471
	1800	20			13.8	*	20.5	*	32	*	50	*	81	*	124	*	180
	1500	17			11.5	*	17.1	*	26.7	*	41	*	68	*	104	*	150
	1200	13			9.2	*	13.7	*	21.4	*	33	*	54	*	83	*	120
	1000	11			7.7	*	11.5	*	17.9	*	27.9	*	45	*	69	*	101
	900	10			6.9	*	10.3	*	16.1	*	25.1	*	41	*	62	*	91
	750	8.3			5.8	*	8.6	*	13.4	*	20.9	*	34	*	52	*	75
100	Exact Reduction Ratio				103.09	102.69	99.26	101.29	103.97	98.871	100.57		97.650	96.720	96.444	96.432	101.66
	1800	18			12.3	16.1	20.1	25.1	29.8	32	49		78	82	118	134	163
	1500	15			10.3	13.4	16.8	20.9	24.9	27.2	41		65	68	99	111	136
	1200	12			8.2	10.7	13.5	16.7	19.9	21.7	33		52	54	79	89	109
	1000	10			6.9	9.0	11.2	13.9	16.6	18.1	27.6		43	45	66	74	91
	900	9.0			6.2	8.1	10.1	12.6	15.0	16.3	24.9		39	41	59	67	82
	750	7.5			5.2	6.7	8.4	10.5	12.5	13.6	20.7		33	34	49	55	68
Dimension Tables		Horizontal			B-152	B-152	B-152	B-152	B-152	B-152	B-154		B-154	B-154	B-154	B-154	B-156
		Vertical			B-174	B-174	B-174	B-174	B-174	B-174	B-176		B-176	B-176	B-176	B-176	B-178
		Upright			B-188	B-188	B-188	B-188	B-188	B-188	B-190		B-190	B-190	B-190	B-190	

THERMAL POWER RATING (kW)

Nominal Reduction Ratio	H.Speed Shaft Speed r/min	Number of Cooling Fans	Size of Reducer 9015	9025	9030	9035	9040	9045	9050	9055	9060	9065	9070	9075	9080	9085	9090
Quadruple Reduction Horizontal Type 80 ▼ 100	1800	-			27	34	42	51	52	65	73		100	122	128	155	157
	1500	-			26	32	41	50	50	62	71		97	118	125	151	156
	1200	-			24	30	39	47	47	59	67		93	113	120	145	152
	1000	-			23	29	37	45	45	56	64		89	108	115	139	148
	900	-			22	28	36	43	44	54	62		86	105	112	135	145
	750	-			21	26	34	41	41	51	59		82	99	107	128	139
Quadruple Reduction Vertical Type 80 ▼ 100	1800	-			28	35	45	54	54	67	77		105	128	136	164	172
	1500	-			27	33	43	51	52	64	73		101	123	131	157	167
	1200	-			25	31	40	48	49	60	69		96	116	124	149	160
	1000	-			24	29	38	46	46	57	65		91	110	119	142	154
	900	-			23	28	37	44	45	55	63		88	107	115	138	150
	750	-			21	26	34	41	42	51	60		83	101	109	130	143
Quadruple Reduction Upright Type 80 ▼ 100	1800	-			27	34	47	51	52	65	74		101	124	130	157	
	1500	-			26	32	45	50	50	63	71		98	120	126	153	
	1200	-			25	31	43	47	48	59	68		93	114	121	146	
	1000	-			23	29	41	45	45	56	64		89	108	116	139	
	900	-			22	28	39	43	44	54	62		87	105	113	136	
	750	-			21	26	37	41	41	51	59		82	100	107	129	

SELECTION Parallel Shaft Quadruple Reduction Nominal Reduction Ratio 80 ▶ 100

Size of Reducer 9095	9100	9105	9110	9115	9118	9121	9126	9128	9131	9136	L.Speed Shaft Speed r/min	H.Speed Shaft Speed r/min	Nominal Reduction Ratio
									80.205	80.205	Exact Reduction Ratio		
*	*	*	*	*	*	*	*	*	1100	1210	**23**	**1800**	
*	*	*	*	*	*	*	*	*	922	1060	**19**	**1500**	
*	*	*	*	*	*	*	*	*	740	872	**15**	**1200**	**80**
*	*	*	*	*	*	*	*	*	618	727	**13**	**1000**	
*	*	*	*	*	*	*	*	*	557	654	**11**	**900**	
*	*	*	*	*	*	*	*	*	465	545	**9.4**	**750**	
	88.676		91.041						89.191	89.191	Exact Reduction Ratio		
*	254	*	353	*	*	*	*	*	994	1170	**20**	**1800**	
*	212	*	295	*	*	*	*	*	831	980	**17**	**1500**	
*	170	*	237	*	*	*	*	*	667	786	**13**	**1200**	**90**
*	142	*	198	*	*	*	*	*	557	657	**11**	**1000**	
*	128	*	178	*	*	*	*	*	502	592	**10**	**900**	
*	106	*	149	*	*	*	*	*	419	494	**8.3**	**750**	
97.907	101.85	98.135	97.789	102.87	96.134	101.59	101.59	98.178	102.03	102.03	Exact Reduction Ratio		
192	232	274	348	373	465	556	648	800	871	1020	**18**	**1800**	
160	194	229	290	312	388	465	541	669	728	858	**15**	**1500**	
128	155	184	233	250	310	373	434	537	584	689	**12**	**1200**	**100**
107	129	153	194	209	258	311	363	448	488	575	**10**	**1000**	
96	117	138	175	188	232	281	327	404	439	518	**9.0**	**900**	
80	97	115	146	157	194	234	273	337	367	433	**7.5**	**750**	
B-156 B-178	B-156 B-178	B-156 B-178	B-156 B-178	B-156 B-178	B-158	B-158	B-158	B-160	B-160	B-160	Horizontal Vertical Upright	Dimension Tables	

* marked models are triple reduction units. Refer to B-118 and B-119.

Notes

1. For ※ marked values, the forced oil lubrication is required at continuous operation.

2. Consult us when the high speed shaft speed is over 1800r/min.

3. When the high speed shaft speed is not shown in the table, find it by the interpolation method.

4. When the high speed shaft speed (N) is lower than 750r/min, find the mechanical power rating (P_N) according to the following formula.

$$P_N = P_{750} \times \frac{N}{750}$$

5. Shown in the table are the ratings for the slow speed shaft.

6. Refer to B132-B135 for the allowable radial and axial load on each shaft.

Size of Reducer 9095	9100	9105	9110	9115	9118	9121	9126	9128	9131	9136	Number of Cooling Fans	H.Speed Shaft Speed r/min	Nominal Reduction Ratio
177	204	230	271	299	328	392	392	425	521	521	-	**1800**	Quadruple Reduction Horizontal Type 80 ▼ 100
175	203	228	268	295	322	386	386	422	515	515	-	**1500**	
170	199	223	261	286	311	374	374	413	502	502	-	**1200**	
165	193	217	253	277	300	362	362	402	487	487	-	**1000**	
162	190	213	248	271	293	354	354	395	478	478	-	**900**	
155	182	205	238	260	280	339	339	381	460	460	-	**750**	
193	225	252	294	323							-	**1800**	Quadruple Reduction Vertical Type 80 ▼ 100
187	219	245	286	313							-	**1500**	
179	210	235	273	299							-	**1200**	
172	202	226	262	287							-	**1000**	
167	197	221	256	280							-	**900**	
159	188	211	244	267							-	**750**	
											-	**1800**	Quadruple Reduction Upright Type 80 ▼ 100
											-	**1500**	
											-	**1200**	
											-	**1000**	
											-	**900**	
											-	**750**	

Ambient Temperature °C	Temperature Correction Factor Without Fan	With Fan
20	1.00	1.00
30	0.85	0.87
40	0.70	0.73
50	0.55	0.60

Notes

1. Shown in the table are the ratings for models without a fan cooling unit and those with a fan. (-: none fan, 1: with a fan)

2. The values are applicable to continuous operation at ambient temperatures of 20 °C or less. When the temperature is out of the range, refer to the temperature correction factor shown above.

3. When the high speed shaft speed is not shown in the table, find it by interpolation method.

SELECTION Parallel Shaft Quadruple Reduction Nominal Reduction Ratio 112 ▶ 140

MECHANICAL POWER RATING (kW)

Nominal Reduction Ratio	H.Speed Shaft Speed r/min	L.Speed Shaft Speed r/min	Size of Reducer 9015	9025	9030	9035	9040	9045	9050	9055	9060	9065	9070	9075	9080	9085	9090
112	Exact Reduction Ratio				111.12	111.65	113.26	115.23	118.37	111.08	117.19	110.06	109.41	108.54	106.37	105.89	110.59
	1800	16			11.1	14.6	16.5	21.5	24.5	32	38	50	65	82	102	130	144
	1500	13			9.2	12.2	13.8	18.0	20.4	27.2	32	41	54	68	85	108	120
	1200	11			7.4	9.8	11.0	14.4	16.4	21.8	26.0	33	43	54	68	87	97
	1000	8.9			6.2	8.2	9.2	12.0	13.7	18.1	21.7	27.9	36	45	57	72	80
	900	8.0			5.6	7.3	8.3	10.8	12.3	16.3	19.6	25.1	33	41	51	65	72
	750	6.7			4.6	6.1	6.9	9.0	10.3	13.6	16.3	20.9	27.5	34	43	54	60
125	Exact Reduction Ratio				127.97	128.49	122.72	126.20	130.09	129.57	125.30	126.11	127.97	120.90	126.39	117.54	127.07
	1800	14			9.9	12.9	16.3	20.3	23.9	31	39	50	60	82	90	124	131
	1500	12			8.3	10.7	13.6	17.0	19.9	26.6	33	41	50	68	75	104	109
	1200	9.6			6.6	8.6	10.9	13.6	16.0	21.3	26.6	33	40	54	60	83	87
	1000	8.0			5.5	7.2	9.1	11.3	13.3	17.8	22.2	27.9	33	45	50	69	73
	900	7.2			5.0	6.5	8.2	10.2	12.0	16.0	20.0	25.1	30	41	45	62	66
	750	6.0			4.2	5.4	6.8	8.5	10.0	13.4	16.7	20.9	25.2	34	38	52	55
140	Exact Reduction Ratio				137.94	139.69	140.03	143.57	148.10	145.56	146.01	144.24	143.38	135.67	139.40	129.07	138.24
	1800	13			8.9	11.7	13.4	17.3	19.6	25.6	31	40	50	69	78	107	116
	1500	11			7.4	9.8	11.2	14.5	16.4	21.4	26.1	33	41	58	65	89	97
	1200	8.6			6.0	7.8	8.9	11.6	13.1	17.1	20.9	27.1	33	46	52	71	77
	1000	7.1			5.0	6.5	7.5	9.7	10.9	14.3	17.5	22.7	28.0	38	43	59	64
	900	6.4			4.5	5.9	6.7	8.7	9.9	12.9	15.7	20.4	25.2	35	39	54	58
	750	5.4			3.7	4.9	5.6	7.3	8.2	10.7	13.1	17.0	21.0	29.2	32	45	48
Dimension Tables		Horizontal			B-152	B-152	B-152	B-152	B-152	B-152	B-154	B-154	B-154	B-154	B-154	B-154	B-156
		Vertical			B-174	B-174	B-174	B-174	B-174	B-174	B-176	B-176	B-176	B-176	B-176	B-176	B-178
		Upright			B-188	B-188	B-188	B-188	B-188	B-188	B-190	B-190	B-190	B-190	B-190	B-190	

THERMAL POWER RATING (kW)

Nominal Reduction Ratio	H.Speed Shaft Speed r/min	Number of Cooling Fans	Size of Reducer 9015	9025	9030	9035	9040	9045	9050	9055	9060	9065	9070	9075	9080	9085	9090
Quadruple Reduction Horizontal Type 112 ▼ 140	1800	-			25	31	40	48	50	61	70	84	95	117	122	150	151
	1500	-			24	30	38	46	48	59	68	81	92	113	119	146	149
	1200	-			23	28	36	43	45	56	64	77	88	108	114	139	145
	1000	-			22	27	35	41	43	53	61	73	84	103	109	134	141
	900	-			21	26	34	40	42	51	59	71	82	100	106	130	138
	750	-			20	24	32	38	39	48	56	67	77	95	101	124	132
Quadruple Reduction Vertical Type 112 ▼ 140	1800	-			27	33	42	50	52	64	73	88	100	122	129	158	164
	1500	-			25	31	40	47	50	61	70	84	96	117	124	151	159
	1200	-			24	29	37	45	47	57	66	79	90	111	118	144	152
	1000	-			22	27	35	42	44	54	62	75	86	105	112	137	146
	900	-			21	26	34	41	43	52	60	72	83	102	109	133	143
	750	-			20	24	32	38	40	49	57	68	79	96	103	126	136
Quadruple Reduction Upright Type 112 ▼ 140	1800	-			26	31	44	48	50	62	71	84	96	118	124	152	
	1500	-			25	30	43	46	48	59	68	81	93	114	120	147	
	1200	-			23	28	40	43	46	56	65	77	89	108	115	140	
	1000	-			22	27	38	41	43	53	61	73	84	103	110	134	
	900	-			21	26	37	40	42	51	60	71	82	100	107	131	
	750	-			20	24	35	38	39	48	56	67	78	95	102	124	

SELECTION Parallel Shaft Quadruple Reduction Nominal Reduction Ratio 112 ▶ 140

Size of Reducer 9095	9100	9105	9110	9115	9118	9121	9126	9128	9131	9136	L.Speed Shaft Speed r/min	H.Speed Shaft Speed r/min	Nominal Reduction Ratio
112.80	109.29	111.48	112.21	110.83	113.61	117.50	117.50	117.37	109.93	109.93	Exact Reduction Ratio		
174	206	251	287	368	433	482	561	671	809	954	**16**	**1800**	
145	172	209	240	308	362	403	469	561	676	797	**13**	**1500**	
116	138	168	192	247	290	323	376	450	542	640	**11**	**1200**	**112**
97	115	140	161	206	242	270	314	376	453	534	**8.9**	**1000**	
87	104	126	145	186	218	243	283	338	408	481	**8.0**	**900**	
73	86	105	121	155	182	203	236	283	341	402	**6.7**	**750**	
122.38	124.14	120.95	119.20	126.78	123.87	127.49	127.49	127.34	129.91	129.91	Exact Reduction Ratio		
154	191	223	286	304	397	445	518	619	686	810	**14**	**1800**	
128	159	186	239	253	332	371	432	517	573	676	**12**	**1500**	
103	127	149	191	203	266	298	347	415	460	542	**9.6**	**1200**	**125**
86	106	124	160	170	222	249	290	347	384	453	**8.0**	**1000**	
77	96	112	144	153	200	224	261	312	346	408	**7.2**	**900**	
64	80	94	120	127	167	187	218	261	289	341	**6.0**	**750**	
141.00	133.22	135.88	136.77	135.09	146.39	146.88	146.88	142.35	133.32	133.32	Exact Reduction Ratio		
139	170	206	236	303	337	387	450	555	669	789	**13**	**1800**	
116	141	172	197	253	281	323	376	464	559	659	**11**	**1500**	
93	113	138	158	203	226	259	301	372	448	529	**8.6**	**1200**	**140**
78	95	115	132	169	188	216	252	310	374	441	**7.1**	**1000**	
70	85	104	119	152	170	195	227	280	337	398	**6.4**	**900**	
58	71	86	99	127	142	162	189	233	281	332	**5.4**	**750**	
B-156 B-178	B-156 B-178	B-156 B-178	B-156 B-178	B-156 B-178	B-158	B-158	B-158	B-160	B-160	B-160	Horizontal Vertical Upright	Dimension Tables	

Notes

1. For ※ marked values, the forced oil lubrication is required at continuous operation.

2. Consult us when the high speed shaft speed is over 1800r/min.

3. When the high speed shaft speed is not shown in the table, find it by the interpolation method.

4. When the high speed shaft speed (N) is lower than 750r/min, find the mechanical power rating (P_N) according to the following formula.

$$P_N = P_{750} \times \frac{N}{750}$$

5. Shown in the table are the ratings for the slow speed shaft.

6. Refer to B132-B135 for the allowable radial and axial load on each shaft.

Size of Reducer 9095	9100	9105	9110	9115	9118	9121	9126	9128	9131	9136	Number of Cooling Fans	H.Speed Shaft Speed r/min	Nominal Reduction Ratio
164	198	218	256	287	321	372	372	413	502	502	-	**1800**	Quadruple Reduction Horizontal Type 112 ▼ 140
162	196	216	252	282	314	365	365	406	493	493	-	**1500**	
157	192	210	245	273	303	352	352	394	476	476	-	**1200**	
152	187	204	237	264	292	340	340	381	461	461	-	**1000**	
149	183	200	232	258	285	333	333	373	451	451	-	**900**	
142	176	192	223	247	273	319	319	358	432	432	-	**750**	
177	216	237	276	307							-	**1800**	Quadruple Reduction Vertical Type 112 ▼ 140
172	211	230	267	297							-	**1500**	
164	202	220	256	284							-	**1200**	
157	194	212	245	272							-	**1000**	
153	189	207	239	265							-	**900**	
146	181	197	228	253							-	**750**	
											-	**1800**	Quadruple Reduction Upright Type 112 ▼ 140
											-	**1500**	
											-	**1200**	
											-	**1000**	
											-	**900**	
											-	**750**	

Ambient Temperature °C	Temperature Correction Factor Without Fan	With Fan
20	1.00	1.00
30	0.85	0.87
40	0.70	0.73
50	0.55	0.60

Notes

1. Shown in the table are the ratings for models without a fan cooling unit and those with a fan. (-: none fan, 1: with a fan)

2. The values are applicable to continuous operation at ambient temperatures of 20 °C or less. When the temperature is out of the range, refer to the temperature correction factor shown above.

3. When the high speed shaft speed is not shown in the table, find it by interpolation method.

SELECTION Parallel Shaft Quadruple Reduction Nominal Reduction Ratio 160 ▶ 200

MECHANICAL POWER RATING (kW)

Nominal Reduction Ratio	H.Speed Shaft Speed r/min	L.Speed Shaft Speed r/min	Size of Reducer 9015	9025	9030	9035	9040	9045	9050	9055	9060	9065	9070	9075	9080	9085	9090
160	Exact Reduction Ratio				165.49	159.50	159.92	156.02	158.68	162.11	154.58	157.13	153.94	158.44	158.25	154.04	168.71
	1800	11			7.7	10.4	12.6	16.5	17.4	25.5	26.6	42	44	63	71	95	99
	1500	9.4			6.4	8.7	10.5	13.7	14.5	21.3	22.2	35	37	53	59	79	82
	1200	7.5			5.1	6.9	8.4	11.0	11.6	17.1	17.8	28.1	29.9	42	47	64	66
	1000	6.3			4.3	5.8	7.0	9.1	9.7	14.2	14.8	23.4	24.9	35	39	53	55
	900	5.6			3.9	5.2	6.3	8.2	8.7	12.8	13.3	21.1	22.4	31	35	48	49
	750	4.7			3.2	4.3	5.3	6.9	7.2	10.7	11.1	17.5	18.7	26.6	29.7	40	41
180	Exact Reduction Ratio				178.38	173.41	182.48	177.50	180.65	182.13	180.12	179.71	172.48	177.79	174.54	169.14	183.53
	1800	10			6.9	9.4	10.3	14.0	16.1	20.5	25.4	32	41	53	62	82	87
	1500	8.3			5.8	7.9	8.6	11.7	13.4	17.1	21.2	27.2	34	44	52	68	73
	1200	6.7			4.6	6.3	6.9	9.4	10.8	13.7	17.0	21.8	27.9	35	42	54	58
	1000	5.6			3.9	5.3	5.7	7.8	9.0	11.4	14.2	18.2	23.3	29.7	35	45	49
	900	5.0			3.5	4.7	5.2	7.1	8.1	10.3	12.8	16.4	21.0	26.7	31	41	44
	750	4.2			2.9	4.0	4.3	5.9	6.7	8.6	10.7	13.7	17.5	22.3	26.4	34	36
200	Exact Reduction Ratio				205.43	206.26	197.71	203.32	207.95	197.74	202.57	193.83	192.43	190.60	192.89	192.86	210.89
	1800	9.0			6.2	8.0	10.2	12.6	15.0	17.4	24.7	26.6	40	44	59	71	79
	1500	7.5			5.2	6.7	8.5	10.5	12.5	14.5	20.6	22.2	33	37	49	59	66
	1200	6.0			4.1	5.4	6.8	8.4	10.0	11.6	16.5	17.8	26.8	29.9	39	47	53
	1000	5.0			3.5	4.5	5.7	7.0	8.4	9.7	13.8	14.8	22.4	24.9	33	39	44
	900	4.5			3.1	4.0	5.1	6.3	7.5	8.7	12.4	13.3	20.2	22.4	30	35	39
	750	3.8			2.6	3.4	4.3	5.3	6.3	7.3	10.3	11.1	16.8	18.7	25.0	29.7	33
Dimension Tables		Horizontal			B-152	B-152	B-152	B-152	B-152	B-152	B-154	B-154	B-154	B-154	B-154	B-154	B-156
		Vertical			B-174	B-174	B-174	B-174	B-174	B-174	B-176	B-176	B-176	B-176	B-176	B-176	B-178
		Upright			B-188	B-188	B-188	B-188	B-188	B-188	B-190	B-190	B-190	B-190	B-190	B-190	

THERMAL POWER RATING (kW)

Nominal Reduction Ratio	H.Speed Shaft Speed r/min	Number of Cooling Fans	Size of Reducer 9015	9025	9030	9035	9040	9045	9050	9055	9060	9065	9070	9075	9080	9085	9090
Quadruple Reduction Horizontal Type 160 ▼ 200	1800	-			23	29	36	43	42	52	61	74	85	103	109	131	138
	1500	-			22	28	34	41	40	49	58	71	81	98	105	126	134
	1200	-			20	26	32	38	37	46	55	66	76	92	99	118	127
	1000	-			19	24	30	36	35	43	51	62	72	87	93	112	121
	900	-			18	23	29	35	33	41	49	59	69	84	90	108	117
	750	-			17	21	27	32	31	38	46	55	65	78	85	101	111
Quadruple Reduction Vertical Type 160 ▼ 200	1800	-			24	30	37	44	43	53	63	76	88	106	113	136	145
	1500	-			23	28	35	42	41	50	60	72	83	101	108	129	139
	1200	-			21	26	33	39	38	46	56	67	78	94	101	121	131
	1000	-			20	24	31	37	35	43	52	63	73	88	95	114	124
	900	-			19	23	30	35	34	41	50	60	70	85	92	110	120
	750	-			17	21	27	33	31	38	47	56	66	79	86	103	113
Quadruple Reduction Upright Type 160 ▼ 200	1800	-			23	29	39	43	42	52	62	74	85	104	110	132	
	1500	-			22	28	37	41	40	49	59	71	81	99	105	126	
	1200	-			21	26	35	38	37	46	55	66	76	93	99	119	
	1000	-			19	24	33	36	35	43	51	62	72	87	94	112	
	900	-			18	23	32	35	33	41	50	59	69	84	91	108	
	750	-			17	21	30	32	31	38	46	55	65	79	85	102	

SELECTION Parallel Shaft Quadruple Reduction Nominal Reduction Ratio 160 ▶ 200

Size of Reducer											L.Speed Shaft Speed r/min	H.Speed Shaft Speed r/min	Nominal Reduction Ratio
9095	9100	9105	9110	9115	9118	9121	9126	9128	9131	9136			
152.98	167.85	147.43	151.57	154.53	150.98	160.41	160.41	154.45	157.56	157.56	Exact Reduction Ratio		
123	141	183	226	250	327	355	413	512	567	669	**11**	**1800**	
103	118	153	188	208	273	296	345	428	474	559	**9.4**	**1500**	
82	94	123	151	167	219	237	276	343	380	448	**7.5**	**1200**	**160**
69	79	102	126	139	183	198	231	286	317	374	**6.3**	**1000**	
62	71	92	113	126	165	178	208	258	286	337	**5.6**	**900**	
51	59	77	95	105	137	149	173	215	238	281	**4.7**	**750**	
187.20	180.12	183.73	173.92	171.78	178.43	176.73	176.73	175.45	171.78	171.78	Exact Reduction Ratio		
105	126	153	186	239	277	322	375	451	521	614	**10**	**1800**	
88	105	127	155	199	231	269	313	377	435	513	**8.3**	**1500**	
70	84	102	125	160	185	216	251	302	349	411	**6.7**	**1200**	**180**
59	70	85	104	133	155	180	209	252	291	343	**5.6**	**1000**	
53	63	77	94	120	139	162	189	227	262	309	**5.0**	**900**	
44	53	64	78	100	116	135	157	190	219	258	**4.2**	**750**	
203.11	206.87	199.34	198.63	196.51	191.99	193.01	193.01	190.35	203.02	203.02	Exact Reduction Ratio		
93	115	136	173	197	258	295	344	416	442	521	**9.0**	**1800**	
78	96	113	144	164	215	246	287	348	369	435	**7.5**	**1500**	
62	77	91	115	132	172	198	230	279	296	349	**6.0**	**1200**	**200**
52	64	76	96	110	144	165	192	233	247	291	**5.0**	**1000**	
47	58	68	87	99	130	148	173	210	222	262	**4.5**	**900**	
39	48	57	72	82	108	124	144	175	185	219	**3.8**	**750**	
B-156 B-178	B-156 B-178	B-156 B-178	B-156 B-178	B-156 B-178	B-158	B-158	B-158	B-160	B-160	B-160	Horizontal Vertical Upright	Dimension Tables	

Notes

1. For ※ marked values, the forced oil lubrication is required at continuous operation.

2. Consult us when the high speed shaft speed is over 1800r/min.

3. When the high speed shaft speed is not shown in the table, find it by the interpolation method.

4. When the high speed shaft speed (N) is lower than 750r/min, find the mechanical power rating (P_N) according to the following formula.

$$P_N = P_{750} \times \frac{N}{750}$$

5. Shown in the table are the ratings for the slow speed shaft.

6. Refer to B132-B135 for the allowable radial and axial load on each shaft.

Size of Reducer											Number of Cooling Fans	H.Speed Shaft Speed r/min	Nominal Reduction Ratio
9095	9100	9105	9110	9115	9118	9121	9126	9128	9131	9136			
154	180	202	236	269	297	360	360	393	480	480	-	**1800**	Quadruple Reduction Horizontal Type 160 ▼ 200
149	175	196	229	262	288	351	351	385	467	467	-	**1500**	
142	167	187	218	250	275	337	337	373	449	449	-	**1200**	
135	160	179	207	240	263	325	325	361	432	432	-	**1000**	
131	155	174	201	234	256	317	317	353	422	422	-	**900**	
123	147	164	190	222	243	303	303	339	403	403	-	**750**	
162	190	213	247	283							-	**1800**	Quadruple Reduction Vertical Type 160 ▼ 200
155	183	204	237	272							-	**1500**	
146	173	193	223	258							-	**1200**	
138	164	183	212	246							-	**1000**	
133	159	177	205	239							-	**900**	
125	150	167	193	226							-	**750**	
											-	**1800**	Quadruple Reduction Upright Type 160 ▼ 200
											-	**1500**	
											-	**1200**	
											-	**1000**	
											-	**900**	
											-	**750**	

Ambient Temperature ℃	Temperature Correction Factor	
	Without Fan	With Fan
20	1.00	1.00
30	0.85	0.87
40	0.70	0.73
50	0.55	0.60

Notes

1. Shown in the table are the ratings for models without a fan cooling unit and those with a fan. (-: none fan, 1: with a fan)

2. The values are applicable to continuous operation at ambient temperatures of 20 °C or less. When the temperature is out of the range, refer to the temperature correction factor shown above.

3. When the high speed shaft speed is not shown in the table, find it by interpolation method.

SELECTION Parallel Shaft Quadruple Reduction Nominal Reduction Ratio 224 ▶ 280

MECHANICAL POWER RATING (kW)

Nominal Reduction Ratio	H.Speed Shaft Speed r/min	L.Speed Shaft Speed r/min	Size of Reducer 9015	9025	9030	9035	9040	9045	9050	9055	9060	9065	9070	9075	9080	9085	9090
224	Exact Reduction Ratio				221.43	224.24	225.60	231.31	236.74	222.15	236.05	221.69	215.61	213.88	212.75	211.77	229.41
	1800	8.0			5.6	7.3	8.3	10.8	12.3	16.8	19.4	26.5	33	44	51	65	70
	1500	6.7			4.7	6.1	6.9	9.0	10.3	14.0	16.2	22.1	27.9	37	43	54	58
	1200	5.4			3.7	4.9	5.6	7.2	8.2	11.3	13.0	17.7	22.4	29.6	34	44	47
	1000	4.5			3.1	4.1	4.6	6.0	6.9	9.4	10.8	14.8	18.7	24.7	28.8	36	39
	900	4.0			2.8	3.7	4.2	5.4	6.2	8.5	9.8	13.3	16.8	22.3	25.9	33	35
	750	3.3			2.3	3.1	3.5	4.5	5.2	7.1	8.1	11.1	14.0	18.6	21.6	27.6	29.5
250	Exact Reduction Ratio					256.04		251.37	260.18	259.14	252.38	254.02	252.17	238.24	252.78	235.08	263.61
	1800	7.2				6.5		10.2	12.0	16.0	19.8	26.0	30	42	45	62	63
	1500	6.0				5.4		8.5	10.0	13.4	16.6	21.7	25.6	35	38	52	53
	1200	4.8				4.3		6.8	8.0	10.7	13.3	17.4	20.5	28.3	30	42	42
	1000	4.0				3.6		5.7	6.7	8.9	11.1	14.5	17.1	23.6	25.5	35	35
	900	3.6				3.3		5.1	6.0	8.0	10.0	13.0	15.4	21.3	22.9	31	32
	750	3.0				2.7		4.3	5.0	6.7	8.3	10.9	12.8	17.8	19.1	26.4	26.7
280	Exact Reduction Ratio					278.37		285.97	296.20	291.13	294.09	290.52	282.55	267.35	278.80	258.13	286.77
	1800	6.4				5.9		8.7	9.9	12.9	15.6	20.3	25.6	35	39	54	56
	1500	5.4				4.9		7.3	8.2	10.7	13.0	16.9	21.3	29.6	32	45	47
	1200	4.3				3.9		5.8	6.6	8.6	10.4	13.5	17.1	23.7	26.4	36	37
	1000	3.6				3.3		4.9	5.5	7.2	8.7	11.3	14.3	19.8	22.0	30	31
	900	3.2				3.0		4.4	4.9	6.5	7.8	10.2	12.8	17.8	19.8	27.1	28.3
	750	2.7				2.5		3.7	4.1	5.4	6.5	8.5	10.7	14.9	16.5	22.6	23.6
Dimension Tables		Horizontal			B-152	B-152	B-152	B-152	B-152	B-152	B-154	B-154	B-154	B-154	B-154	B-154	B-156
		Vertical			B-174	B-174	B-174	B-174	B-174	B-174	B-176	B-176	B-176	B-176	B-176	B-176	B-178
		Upright			B-188	B-188	B-188	B-188	B-188	B-188	B-190	B-190	B-190	B-190	B-190	B-190	

THERMAL POWER RATING (kW)

Nominal Reduction Ratio	H.Speed Shaft Speed r/min	Number of Cooling Fans	Size of Reducer 9015	9025	9030	9035	9040	9045	9050	9055	9060	9065	9070	9075	9080	9085	9090
Quadruple Reduction Horizontal Type 224 ▼ 280	1800	-			23	27	35	40	40	49	59	71	80	99	104	127	132
	1500	-			22	25	33	38	38	47	56	67	77	94	99	121	127
	1200	-			20	24	31	36	36	43	52	63	72	88	94	114	121
	1000	-			19	22	29	34	33	41	49	59	68	83	89	108	115
	900	-			18	21	28	32	32	39	47	56	66	80	86	104	112
	750	-			17	20	26	30	30	36	44	53	61	75	80	98	106
Quadruple Reduction Vertical Type 224 ▼ 280	1800	-			24	28	36	41	42	51	60	72	83	102	107	131	138
	1500	-			22	26	34	39	39	48	57	68	79	96	102	124	132
	1200	-			21	24	32	36	36	44	53	64	74	90	96	116	125
	1000	-			19	22	30	34	34	41	50	59	69	84	90	110	118
	900	-			18	21	29	33	32	39	48	57	67	81	87	106	114
	750	-			17	20	27	31	30	36	44	53	62	76	81	99	107
Quadruple Reduction Upright Type 224 ▼ 280	1800	-			23	27	38	40	41	50	59	71	81	99	104	127	
	1500	-			22	25	36	38	38	47	56	67	77	95	100	122	
	1200	-			20	24	34	36	36	44	52	63	72	89	94	115	
	1000	-			19	22	32	34	33	41	49	59	68	83	89	108	
	900	-			18	21	30	32	32	39	47	56	66	80	86	105	
	750	-			17	20	28	30	30	36	44	53	62	75	81	98	

SELECTION Parallel Shaft Quadruple Reduction Nominal Reduction Ratio 224 ▶ 280

Size of Reducer											L.Speed Shaft Speed r/min	H.Speed Shaft Speed r/min	Nominal Reduction Ratio
9095	**9100**	**9105**	**9110**	**9115**	**9118**	**9121**	**9126**	**9128**	**9131**	**9136**			
234.00	222.00	226.44	227.92	225.12	226.90	230.40	230.40	223.56	232.24	232.24	Exact Reduction Ratio		
84	102	124	142	183	218	248	288	355	387	456	**8.0**	**1800**	
70	85	104	119	152	182	207	241	297	323	381	**6.7**	**1500**	
56	68	83	95	122	146	166	193	238	259	305	**5.4**	**1200**	**224**
47	57	69	79	102	122	138	161	198	216	255	**4.5**	**1000**	
42	51	62	71	92	110	124	145	179	194	229	**4.0**	**900**	
35	43	52	60	76	91	104	121	149	162	191	**3.3**	**750**	
253.88	252.16	245.68	242.12	257.52	251.60	251.62	251.62	242.56	247.46	247.46	Exact Reduction Ratio		
74	94	110	142	150	197	227	264	328	363	428	**7.2**	**1800**	
62	79	92	118	126	165	189	221	274	303	357	**6.0**	**1500**	
50	63	74	95	101	132	152	177	219	243	287	**4.8**	**1200**	**250**
41	52	61	79	84	110	127	147	183	203	239	**4.0**	**1000**	
37	47	55	71	75	99	114	133	165	182	215	**3.6**	**900**	
31	39	46	59	63	83	95	111	137	152	180	**3.0**	**750**	
292.50	270.60	276.01	277.82	274.40	276.57	288.00	288.00	275.54	283.08	283.08	Exact Reduction Ratio		
67	84	102	117	150	179	199	231	289	318	375	**6.4**	**1800**	
56	70	85	98	125	150	166	193	241	265	313	**5.4**	**1500**	
45	56	68	78	100	120	133	155	193	212	251	**4.3**	**1200**	**280**
37	47	57	65	84	100	111	129	161	177	209	**3.6**	**1000**	
34	42	51	59	75	90	100	116	145	160	188	**3.2**	**900**	
28.5	35	42	49	63	75	83	97	121	133	157	**2.7**	**750**	
B-156	B-156	B-156	B-156	B-156	B-158	B-158	B-158	B-160	B-160	B-160	Horizontal	Dimension Tables	
B-178	B-178	B-178	B-178	B-178							Vertical		
											Upright		

Notes

1. For ※ marked values, the forced oil lubrication is required at continuous operation.

2. Consult us when the high speed shaft speed is over 1800r/min.

3. When the high speed shaft speed is not shown in the table, find it by the interpolation method.

4. When the high speed shaft speed (N) is lower than 750r/min, find the mechanical power rating (P_N) according to the following formula.

$$P_N = P_{750} \times \frac{N}{750}$$

5. Shown in the table are the ratings for the slow speed shaft.

6. Refer to B132-B135 for the allowable radial and axial load on each shaft.

Size of Reducer											Number of Cooling Fans	H.Speed Shaft Speed r/min	Nominal Reduction Ratio
9095	**9100**	**9105**	**9110**	**9115**	**9118**	**9121**	**9126**	**9128**	**9131**	**9136**			
142	174	190	222	247	275	322	322	366	443	443	-	**1800**	Quadruple Reduction Horizontal Type 224 ▼ 280
137	169	184	215	239	265	311	311	356	430	430	-	**1500**	
130	161	176	204	227	251	296	296	341	411	411	-	**1200**	
124	154	168	195	216	239	283	283	328	395	395	-	**1000**	
120	150	163	189	210	232	275	275	319	384	384	-	**900**	
114	142	155	179	198	219	261	261	304	366	366	-	**750**	
149	183	200	232	257							-	**1800**	Quadruple Reduction Vertical Type 224 ▼ 280
142	176	192	222	246							-	**1500**	
134	166	181	209	232							-	**1200**	
127	158	172	199	220							-	**1000**	
123	153	167	192	213							-	**900**	
115	144	157	181	201							-	**750**	
											-	**1800**	Quadruple Reduction Upright Type 224 ▼ 280
											-	**1500**	
											-	**1200**	
											-	**1000**	
											-	**900**	
											-	**750**	

Ambient Temperature °C	Temperature Correction Factor	
	Without Fan	With Fan
20	1.00	1.00
30	0.85	0.87
40	0.70	0.73
50	0.55	0.60

Notes

1. Shown in the table are the ratings for models without a fan cooling unit and those with a fan. (-: none fan, 1: with a fan)

2. The values are applicable to continuous operation at ambient temperatures of 20 °C or less. When the temperature is out of the range, refer to the temperature correction factor shown above.

3. When the high speed shaft speed is not shown in the table, find it by interpolation method.

SELECTION Parallel Shaft Quadruple Reduction Nominal Reduction Ratio 315 ▶ 400

MECHANICAL POWER RATING (kW)

Nominal Reduction Ratio	H.Speed Shaft Speed r/min	L.Speed Shaft Speed r/min	Size of Reducer 9015	9025	9030	9035	9040	9045	9050	9055	9060	9065	9070	9075	9080	9085	9090
315	Exact Reduction Ratio								315.95	324.22	327.89	316.48	324.10	312.22	318.63	308.07	313.18
	1800	5.7							9.2	12.8	14.0	20.9	22.3	32	34	48	51
	1500	4.8							7.7	10.7	11.7	17.4	18.6	27.0	28.9	40	43
	1200	3.8							6.2	8.6	9.4	13.9	14.9	21.6	23.1	32	34
	1000	3.2							5.2	7.1	7.8	11.6	12.4	18.1	19.3	26.8	28.8
	900	2.9							4.6	6.4	7.0	10.5	11.2	16.3	17.4	24.2	25.9
	750	2.4							3.9	5.4	5.9	8.7	9.3	13.6	14.5	20.2	21.6
355	Exact Reduction Ratio								367.08	364.25	364.33	361.96	345.71	350.36	355.25	338.28	359.23
	1800	5.1							8.0	10.3	12.6	16.3	20.9	27.1	31	41	45
	1500	4.2							6.6	8.6	10.5	13.6	17.5	22.6	25.9	34	37
	1200	3.4							5.3	6.9	8.4	10.9	14.0	18.1	20.7	27.6	30
	1000	2.8							4.4	5.7	7.0	9.1	11.7	15.1	17.3	23.0	25.1
	900	2.5							4.0	5.2	6.3	8.2	10.5	13.6	15.6	20.7	22.6
	750	2.1							3.3	4.3	5.3	6.8	8.8	11.4	13.0	17.3	18.9
400	Exact Reduction Ratio								400.89	388.53	421.41	403.56	401.65	401.88	394.72	386.60	383.18
	1800	4.5							7.3	9.7	10.9	14.6	18.0	23.7	28.0	36	42
	1500	3.8							6.1	8.1	9.1	12.2	15.0	19.8	23.3	30	35
	1200	3.0							4.9	6.5	7.3	9.8	12.1	15.8	18.7	24.2	28.3
	1000	2.5							4.1	5.4	6.1	8.1	10.1	13.2	15.6	20.2	23.6
	900	2.3							3.7	4.8	5.5	7.3	9.1	11.9	14.0	18.2	21.2
	750	1.9							3.1	4.0	4.6	6.1	7.5	9.9	11.7	15.1	17.7
Dimension Tables		Horizontal							B-152	B-152	B-154	B-154	B-154	B-154	B-154	B-154	B-156
		Vertical							B-174	B-174	B-176	B-176	B-176	B-176	B-176	B-176	B-178
		Upright							B-188	B-188	B-190	B-190	B-190	B-190	B-190	B-190	

THERMAL POWER RATING (kW)

Nominal Reduction Ratio	H.Speed Shaft Speed r/min	Number of Cooling Fans	Size of Reducer 9015	9025	9030	9035	9040	9045	9050	9055	9060	9065	9070	9075	9080	9085	9090
Quadruple Reduction Horizontal Type 315 ▼ 400	1800	-							41	47	57	67	80	93	103	120	133
	1500	-							39	45	54	64	76	89	99	115	128
	1200	-							36	42	51	60	72	83	93	108	122
	1000	-							34	39	48	56	67	79	88	102	116
	900	-							33	37	46	54	65	76	85	99	113
	750	-							30	35	42	50	61	71	80	93	106
Quadruple Reduction Vertical Type 315 ▼ 400	1800	-							42	49	59	69	82	96	107	124	139
	1500	-							40	46	56	65	78	91	101	118	133
	1200	-							37	42	52	61	73	85	95	110	125
	1000	-							34	39	48	57	68	80	89	104	119
	900	-							33	38	46	55	66	77	86	100	115
	750	-							31	35	43	51	61	72	81	94	108
Quadruple Reduction Upright Type 315 ▼ 400	1800	-							41	48	58	67	81	94	104	121	
	1500	-							39	45	55	64	77	89	99	116	
	1200	-							36	42	51	60	72	84	93	109	
	1000	-							34	39	48	56	68	79	88	103	
	900	-							33	37	46	54	65	76	85	99	
	750	-							30	35	42	50	61	71	80	93	

SELECTION Parallel Shaft Quadruple Reduction Nominal Reduction Ratio 315 ▶ 400

Size of Reducer 9095	9100	9105	9110	9115	9118	9121	9126	9128	9131	9136	L.Speed Shaft Speed r/min	H.Speed Shaft Speed r/min	Nominal Reduction Ratio
317.35	305.90	299.46	328.33	313.90	316.08	314.53	314.53	298.95	323.52	323.52	Exact Reduction Ratio		
60	74	91	99	124	157	182	212	266	278	328	**5.7**	**1800**	
50	62	76	83	103	131	152	177	222	232	274	**4.8**	**1500**	
40	49	60	66	83	105	122	142	178	186	220	**3.8**	**1200**	**315**
33	41	50	55	69	88	101	118	149	155	183	**3.2**	**1000**	
30	37	45	50	62	79	91	106	134	140	165	**2.9**	**900**	
25.2	31	38	41	52	66	76	89	112	117	138	**2.4**	**750**	
346.58	349.61	338.53	375.23	370.97	362.44	341.25	341.25	355.99			Exact Reduction Ratio		
55	65	80	87	105	137	168	195	224			**5.1**	**1800**	
45	54	67	72	87	114	140	163	187			**4.2**	**1500**	
36	43	53	58	70	92	112	131	150			**3.4**	**1200**	**355**
30	36	45	48	58	76	93	109	125			**2.8**	**1000**	
27.6	32	40	43	52	69	84	98	112			**2.5**	**900**	
23.0	27.4	33	36	44	57	70	82	94			**2.1**	**750**	
397.55	389.79	386.90	418.36	423.96	414.22	391.44	391.44	386.24			Exact Reduction Ratio		
48	58	70	78	92	120	146	170	207			**4.5**	**1800**	
40	49	59	65	76	100	122	142	172			**3.8**	**1500**	
32	39	47	52	61	80	98	114	138			**3.0**	**1200**	**400**
26.8	32	39	43	51	67	81	95	115			**2.5**	**1000**	
24.1	29.5	35	39	46	60	73	85	104			**2.3**	**900**	
20.1	24.6	29.6	32	38	50	61	71	86			**1.9**	**750**	
B-156 B-178	B-156 B-178	B-156 B-178	B-156 B-178	B-156 B-178	B-158	B-158	B-158	B-160	B-160	B-160	Horizontal Vertical Upright	Dimension Tables	

Notes

1. For ※ marked values, the forced oil lubrication is required at continuous operation.

2. Consult us when the high speed shaft speed is over 1800r/min.

3. When the high speed shaft speed is not shown in the table, find it by the interpolation method.

4. When the high speed shaft speed (N) is lower than 750r/min, find the mechanical power rating (P_N) according to the following formula.

$$P_N = P_{750} \times \frac{N}{750}$$

5. Shown in the table are the ratings for the slow speed shaft.

6. Refer to B132-B135 for the allowable radial and axial load on each shaft.

Size of Reducer 9095	9100	9105	9110	9115	9118	9121	9126	9128	9131	9136	Number of Cooling Fans	H.Speed Shaft Speed r/min	Nominal Reduction Ratio
142	172	187	215	237	260	316	316	353	433	433	-	**1800**	Quadruple Reduction Horizontal Type 315 ▼ 400
137	166	181	207	229	250	304	304	342	419	419	-	**1500**	
130	158	173	197	217	237	289	289	327	400	400	-	**1200**	
124	151	165	188	207	226	275	275	313	383	383	-	**1000**	
120	147	160	182	201	219	267	267	305	372	372	-	**900**	
113	139	152	172	190	207	253	253	289	354	354	-	**750**	
148	180	196	223	246							-	**1800**	Quadruple Reduction Vertical Type 315 ▼ 400
142	172	188	214	235							-	**1500**	
134	163	178	201	222							-	**1200**	
127	154	169	191	211							-	**1000**	
122	150	164	185	204							-	**900**	
115	141	154	174	192							-	**750**	
											-	**1800**	Quadruple Reduction Upright Type 315 ▼ 400
											-	**1500**	
											-	**1200**	
											-	**1000**	
											-	**900**	
											-	**750**	

Ambient Temperature ℃	Temperature Correction Factor Without Fan	With Fan
20	1.00	1.00
30	0.85	0.87
40	0.70	0.73
50	0.55	0.60

Notes

1. Shown in the table are the ratings for models without a fan cooling unit and those with a fan. (-: none fan, 1: with a fan)

2. The values are applicable to continuous operation at ambient temperatures of 20 °C or less. When the temperature is out of the range, refer to the temperature correction factor shown above.

3. When the high speed shaft speed is not shown in the table, find it by interpolation method.

SELECTION Parallel Shaft Quadruple Reduction Nominal Reduction Ratio 450 ▶ 500

MECHANICAL POWER RATING (kW)

Nominal Reduction Ratio	H.Speed Shaft Speed r/min	L.Speed Shaft Speed r/min	Size of Reducer 9015	9025	9030	9035	9040	9045	9050	9055	9060	9065	9070	9075	9080	9085	9090
450	Exact Reduction Ratio									451.41		448.40		428.67		431.03	
	1800	4.0								8.3		13.2		22.2		32	
	1500	3.3								6.9		11.0		18.5		27.1	
	1200	2.7								5.6		8.8		14.8		21.7	
	1000	2.2								4.6		7.3		12.4		18.1	
	900	2.0								4.2		6.6		11.1		16.3	
	750	1.7								3.5		5.5		9.3		13.6	
500	Exact Reduction Ratio									492.99		518.66		498.04		478.93	
	1800	3.6								7.6		11.4		19.1		29.2	
	1500	3.0								6.4		9.5		16.0		24.4	
	1200	2.4								5.1		7.6		12.8		19.5	
	1000	2.0								4.2		6.3		10.7		16.3	
	900	1.8								3.8		5.7		9.6		14.7	
	750	1.5								3.2		4.8		8.0		12.2	
Dimension Tables		Horizontal								B-152		B-154		B-154		B-154	
		Vertical								B-174		B-176		B-176		B-176	
		Upright								B-188		B-190		B-190		B-190	

THERMAL POWER RATING (kW)

Nominal Reduction Ratio	H.Speed Shaft Speed r/min	Number of Cooling Fans	Size of Reducer 9015	9025	9030	9035	9040	9045	9050	9055	9060	9065	9070	9075	9080	9085	9090
Quadruple Reduction Horizontal Type 450 ▼ 500	1800	-								49		67		92		120	
	1500	-								47		64		88		115	
	1200	-								43		59		82		108	
	1000	-								40		56		77		102	
	900	-								39		53		74		98	
	750	-								36		50		69		92	
Quadruple Reduction Vertical Type 450 ▼ 500	1800	-								50		69		94		123	
	1500	-								48		65		89		117	
	1200	-								44		60		83		109	
	1000	-								41		56		78		103	
	900	-								39		54		75		99	
	750	-								36		50		70		93	
Quadruple Reduction Upright Type 450 ▼ 500	1800	-								49		67		92		120	
	1500	-								47		64		88		115	
	1200	-								43		59		82		108	
	1000	-								41		56		77		102	
	900	-								39		53		74		98	
	750	-								36		50		69		92	

SELECTION Parallel Shaft Quadruple Reduction Nominal Reduction Ratio 450 ▶ 500

Size of Reducer											L.Speed Shaft Speed r/min	H.Speed Shaft Speed r/min	Nominal Reduction Ratio
9095	9100	9105	9110	9115	9118	9121	9126	9128	9131	9136			
424.05		431.36		472.69	461.82						Exact Reduction Ratio		
45		63		82	108						**4.0**	**1800**	
37		52		69	90						**3.3**	**1500**	
30		42		55	72						**2.7**	**1200**	**450**
25.1		35		46	60						**2.2**	**1000**	
22.6		31		41	54						**2.0**	**900**	
18.9		26.6		34	45						**1.7**	**750**	
											Exact Reduction Ratio		
											3.6	**1800**	
											3.0	**1500**	
											2.4	**1200**	**500**
											2.0	**1000**	
											1.8	**900**	
											1.5	**750**	
B-156		B-156		B-156	B-158						Horizontal	Dimension Tables	
B-178		B-178		B-178							Vertical		
											Upright		

Notes

1. For ※ marked values, the forced oil lubrication is required at continuous operation.

2. Consult us when the high speed shaft speed is over 1800r/min.

3. When the high speed shaft speed is not shown in the table, find it by the interpolation method.

4. When the high speed shaft speed (N) is lower than 750r/min, find the mechanical power rating (P_N) according to the following formula.

$$P_N = P_{750} \times \frac{N}{750}$$

5. Shown in the table are the ratings for the slow speed shaft.

6. Refer to B132-B135 for the allowable radial and axial load on each shaft.

Size of Reducer											Number of Cooling Fans	H.Speed Shaft Speed r/min	Nominal Reduction Ratio
9095	9100	9105	9110	9115	9118	9121	9126	9128	9131	9136			
143		184		233	256						-	**1800**	Quadruple Reduction Horizontal Type 450 ▼ 500
138		178		225	246						-	**1500**	
131		170		213	233						-	**1200**	
125		162		203	221						-	**1000**	
121		157		196	214						-	**900**	
114		148		185	202						-	**750**	
149		192		241							-	**1800**	Quadruple Reduction Vertical Type 450 ▼ 500
143		184		231							-	**1500**	
134		174		217							-	**1200**	
127		165		206							-	**1000**	
123		160		199							-	**900**	
116		151		188							-	**750**	
											-	**1800**	Quadruple Reduction Upright Type 450 ▼ 500
											-	**1500**	
											-	**1200**	
											-	**1000**	
											-	**900**	
											-	**750**	

Ambient Temperature ℃	Temperature Correction Factor	
	Without Fan	With Fan
20	1.00	1.00
30	0.85	0.87
40	0.70	0.73
50	0.55	0.60

Notes

1. Shown in the table are the ratings for models without a fan cooling unit and those with a fan. (-: none fan, 1: with a fan)

2. The values are applicable to continuous operation at ambient temperatures of 20 °C or less. When the temperature is out of the range, refer to the temperature correction factor shown above.

3. When the high speed shaft speed is not shown in the table, find it by interpolation method.

SELECTION Allowable Radial and Axial Loads on Slow Speed Parallel shaft

Allowable Radial Load (kN)

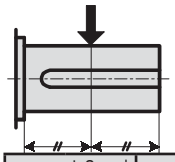

Sheet 1

Applicable to configurations: RL, LR, BL

	L.Speed Shaft Speed r/min	Size of Reducer																
		9015	9025	9030	9035	9040	9045	9050	9055	9060	9065	9070	9075	9080	9085	9090	9095	9100
Standard bearing model	250	11.8	17.7	17.7	29.4	29.9	32.4	37.8	46.6	39.7	49.1	44.1	77.0	77.0	100.1	100.1	137.8	139.8
	160	11.8	17.7	20.1	31.4	32.4	33.8	39.7	48.1	41.7	50.5	46.1	89.0	89.0	108.9	108.9	145.7	157.5
	100	11.8	17.7	25.0	35.3	38.7	39.2	47.1	53.5	47.6	54.4	54.4	99.0	99.0	122.1	122.1	147.6	166.3
	63	11.8	17.7	26.5	35.3	42.2	47.1	54.9	62.3	58.9	64.3	65.2	131.5	131.5	125.6	125.6	143.7	165.3
	40	11.8	17.7	26.5	35.3	42.2	49.1	54.9	67.7	71.1	78.0	79.0	141.0	141.0	125.1	125.1	137.8	164.8
	≦ 25	11.8	17.7	26.5	35.3	42.2	49.1	54.9	67.7	81.4	95.2	99.1	139.5	139.5	122.6	122.6	135.4	163.3
Heavy duty bearing model	250									71.1	93.7	70.1	122.5	122.5	141.8	141.8	158.9	181.0
	160									78.0	94.7	77.5	137.5	137.5	132.4	132.4	151.6	174.6
	100									81.4	98.1	92.2	149.5	149.5	127.0	127.0	147.6	166.8
	63									81.4	98.1	114.8	149.0	149.0	125.6	125.6	143.7	165.8
	40									81.4	98.1	117.7	148.5	148.5	125.1	125.1	137.8	165.3
	≦ 25									81.4	98.1	117.7	147.0	147.0	122.6	122.6	135.4	163.8

Sheet 2

Applicable to configurations: RR, LL, BR

	L.Speed Shaft Speed r/min	Size of Reducer																
		9015	9025	9030	9035	9040	9045	9050	9055	9060	9065	9070	9075	9080	9085	9090	9095	9100
Standard bearing model	250	8.3	15.2	9.8	21.6	19.1	21.6	22.6	31.4	16.7	28.4	17.2	44.0	44.0	58.4	58.4	97.6	80.4
	160	9.8	17.7	12.3	23.1	20.6	23.1	24.0	31.4	18.1	27.0	17.7	55.5	55.5	64.3	64.3	103.0	96.1
	100	11.8	17.7	16.7	29.4	26.0	27.5	28.4	35.3	22.1	30.4	25.5	63.5	63.5	74.6	74.6	110.9	105.9
	63	11.8	17.7	21.6	35.3	32.9	35.3	37.3	42.7	33.4	38.3	33.8	95.0	95.0	104.5	104.5	148.1	153.5
	40	11.8	17.7	26.5	35.3	41.7	43.7	48.6	55.4	45.1	51.5	47.6	129.0	129.0	146.7	146.7	172.2	203.6
	≦ 25	11.8	17.7	26.5	35.3	42.2	49.1	54.9	67.7	60.8	68.7	67.7	167.0	167.0	171.2	171.2	171.2	215.3
Heavy duty bearing model	250									46.1	74.6	40.2	90.0	90.0	114.8	114.8	156.0	150.6
	160									52.0	72.1	45.6	103.5	103.5	125.1	125.1	164.8	170.7
	100									60.3	79.0	59.4	116.0	116.0	140.8	140.8	176.1	187.4
	63									81.4	96.6	80.0	152.5	152.5	174.1	174.1	186.9	218.8
	40									81.4	98.1	108.9	192.0	192.0	191.8	191.8	193.7	241.8
	≦ 25									81.4	98.1	117.7	180.5	180.5	171.2	171.2	171.2	214.8

Allowable Axial Load (kN)

	L.Speed Shaft Speed r/min	Size of Reducer																
		9015	9025	9030	9035	9040	9045	9050	9055	9060	9065	9070	9075	9080	9085	9090	9095	9100
Standard bearing model	250	9.3	11.4	14.7	23.1	26.5	31.4	32.9	31.9	27.0	43.2	28.0	28.0	23.5	23.5	31.4	52.0	45.1
	160	9.3	11.4	18.1	23.1	28.4	31.4	33.4	31.9	28.9	43.2	28.4	28.4	27.5	27.5	34.3	53.0	53.0
	100	9.3	11.4	24.5	23.1	32.9	31.4	37.3	31.9	34.3	43.2	39.7	39.7	32.9	32.9	43.2	59.4	58.4
	63	9.3	11.4	26.5	23.1	32.9	31.4	37.3	31.9	49.1	43.2	52.5	52.5	45.6	45.6	54.0	59.8	81.4
	40	9.3	11.4	26.5	23.1	32.9	31.4	37.3	31.9	49.1	43.2	61.4	61.4	63.3	60.3	59.8	59.8	83.4
	≦ 25	9.3	11.4	26.5	23.1	32.9	31.4	37.3	31.9	49.1	43.2	61.4	61.4	67.7	60.3	59.8	59.8	83.4
Heavy duty bearing model	250									23.1	34.8	18.6	18.6	56.9	56.9	59.8	59.8	83.4
	160									25.0	33.4	21.1	21.1	56.9	56.9	59.8	59.8	83.4
	100									29.4	36.8	27.5	27.5	56.9	56.9	59.8	59.8	83.4
	63									39.2	43.2	36.3	36.3	56.9	56.9	59.8	59.8	83.4
	40									39.2	43.2	49.1	49.1	56.9	56.9	59.8	59.8	83.4
	≦ 25									39.2	43.2	56.9	56.9	56.9	56.9	59.8	59.8	83.4

SELECTION Allowable Radial and Axial Loads on Slow Speed Parallel shaft

Size of Reducer									L.Speed Shaft Speed r/min	
9105	**9110**	**9115**	**9118**	**9121**	**9126**	**9128**	**9131**	**9136**		
192.3	167.8	222.7							250	Standard bearing model
200.6	174.1	234.9							160	
183.9	184.9	245.7	391.9	352.7	330.6	315.4	403.2	391.9	100	
178.1	190.8	303.1	387.5	369.3	341.4	328.6	462.5	430.7	63	
173.6	194.7	320.8	460.1	449.3	401.2	409.6	572.4	511.1	40	
167.3	184.9	316.4	448.3	554.8	497.4	534.6	733.8	638.6	≦ 25	
213.9	250.6	316.9							250	Heavy duty bearing model
200.6	214.8	334.5							160	
183.9	195.2	340.9							100	
178.1	190.8	333.5							63	
173.6	194.7	320.8							40	
167.3	184.9	316.4							≦ 25	

Unit: kN

Size of Reducer									L.Speed Shaft Speed r/min	
9105	**9110**	**9115**	**9118**	**9121**	**9126**	**9128**	**9131**	**9136**		
131.5	94.2	152.5							250	Standard bearing model
138.3	92.2	155.0							160	
146.7	101.0	167.3	312.0	228.1	197.7	159.4	203.6	190.3	100	
200.1	144.7	220.7	292.3	244.3	206.0	170.7	260.9	218.8	63	
235.4	199.1	250.2	373.3	322.7	257.0	250.2	369.3	286.5	40	
304.1	272.7	353.2	460.1	427.2	348.7	373.3	528.3	398.3	≦ 25	
213.4	191.3	248.7							250	Heavy duty bearing model
223.2	197.7	261.4							160	
236.9	210.4	274.2							100	
301.7	267.8	341.9							63	
304.1	323.7	382.1							40	
304.1	323.7	374.7							≦ 25	

Unit: kN

Size of Reducer									L.Speed Shaft Speed r/min	
9105	**9110**	**9115**	**9118**	**9121**	**9126**	**9128**	**9131**	**9136**		
50.0	50.0	76.5							250	Standard bearing model
49.5	49.5	76.5							160	
54.0	54.0	83.4	119.7	121.6	116.7	91.2	113.3	107.9	100	
74.6	74.6	83.4	119.7	121.6	121.6	96.6	140.3	122.6	63	
83.4	83.4	83.4	119.7	121.6	121.6	134.9	191.3	155.5	40	
83.4	83.4	83.4	119.7	121.6	121.6	144.2	192.3	192.3	≦ 25	
83.4	83.4	83.4							250	Heavy duty bearing model
83.4	83.4	83.4							160	
83.4	83.4	83.4							100	
83.4	83.4	83.4							63	
83.4	83.4	83.4							40	
83.4	83.4	83.4							≦ 25	

Unit: kN

Overhang Factor

Overhang Member	Overhang Factor
Sprocket (Single Row)	1
Sprocket (Double Row)	1.25
Gears	1.25

Notes

1. The value shown in the table is allowable radial load when it is applied to the center of the solid shaft (except hollow shaft).
   Consult us when a load is not in the center.
2. Consult us for the blanks in the table.
3. Consult us when the radial load is applied upward.
4. In case of double projection shaft (RB,LB,BB)
   (1) See sheet1 when the radial load is applied only to the shaft1.
   (2) See sheet2 when the radial load is applied only to the shaft2.
   (3) Consult us when the radial load is applied to both shafts.
5. Refer to B-6 to check overhang load, and calculate equivalent load at peak load value.
   Be careful under following condition because large peak load may be generated.
   Application: When the inertia is large, such as for crane driving, slewing, etc.
   Motor: inline motor
   Connecting method: Sprocket or gear
   Consult us when the peak load is larger than allowable value.

RB

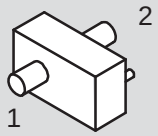

LB

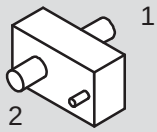

BB

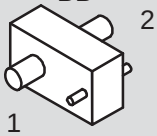

SELECTION Allowable Radial and Axial Loads on Slow Speed Parallel shaft

Allowable Radial Load (kgf)

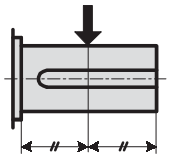

Sheet 1

Applicable to configurations: RL, LR, BL

	L.Speed Shaft Speed r/min	Size of Reducer																
		9015	**9025**	**9030**	**9035**	**9040**	**9045**	**9050**	**9055**	**9060**	**9065**	**9070**	**9075**	**9080**	**9085**	**9090**	**9095**	**9100**
Standard bearing model	250	1200	1800	1800	3000	3050	3300	3850	4750	4050	5000	4500	7850	7850	10200	10200	14050	14250
	160	1200	1800	2050	3200	3300	3450	4050	4900	4250	5150	4700	9050	9050	11100	11100	14850	16050
	100	1200	1800	2550	3600	3950	4000	4800	5450	4850	5550	5550	10100	10100	12450	12450	15050	16950
	63	1200	1800	2700	3600	4300	4800	5600	6350	6000	6550	6650	13400	13400	12800	12800	14650	16850
	40	1200	1800	2700	3600	4300	5000	5600	6900	7250	7950	8050	14350	14350	12750	12750	14050	16800
	≦ 25	1200	1800	2700	3600	4300	5000	5600	6900	8300	9700	10100	14200	14200	12500	12500	13800	16650
Heavy duty bearing model	250									7250	9550	7150	12500	12500	14450	14450	16200	18450
	160									7950	9650	7900	14000	14000	13500	13500	15450	17800
	100									8300	10000	9400	15250	15250	12950	12950	15050	17000
	63									8300	10000	11700	15200	15200	12800	12800	14650	16900
	40									8300	10000	12000	15150	15150	12750	12750	14050	16850
	≦ 25									8300	10000	12000	15000	15000	12500	12500	13800	16700

Sheet 2

Applicable to configurations: RR, LL, BR

	L.Speed Shaft Speed r/min	Size of Reducer																
		9015	**9025**	**9030**	**9035**	**9040**	**9045**	**9050**	**9055**	**9060**	**9065**	**9070**	**9075**	**9080**	**9085**	**9090**	**9095**	**9100**
Standard bearing model	250	850	1550	1000	2200	1950	2200	2300	3200	1700	2900	1750	4500	4500	5950	5950	9950	8200
	160	1000	1800	1250	2350	2100	2350	2450	3200	1850	2750	1800	5650	5650	6550	6550	10500	9800
	100	1200	1800	1700	3000	2650	2800	2900	3600	2250	3100	2600	6450	6450	7600	7600	11300	10800
	63	1200	1800	2200	3600	3350	3600	3800	4350	3400	3900	3450	9700	9700	10650	10650	15100	15650
	40	1200	1800	2700	3600	4250	4450	4950	5650	4600	5250	4850	13150	13150	14950	14950	17550	20750
	≦ 25	1200	1800	2700	3600	4300	5000	5600	6900	6200	7000	6900	17000	17000	17450	17450	17450	21950
Heavy duty bearing model	250									4700	7600	4100	9150	9150	11700	11700	15900	15350
	160									5300	7350	4650	10550	10550	12750	12750	16800	17400
	100									6150	8050	6050	11800	11800	14350	14350	17950	19100
	63									8300	9850	8150	15550	15550	17750	17750	19050	22300
	40									8300	10000	11100	19550	19550	19550	19550	19750	24650
	≦ 25									8300	10000	12000	18400	18400	17450	17450	17450	21900

Allowable Axial Load (kgf)

	L.Speed Shaft Speed r/min	Size of Reducer																
		9015	**9025**	**9030**	**9035**	**9040**	**9045**	**9050**	**9055**	**9060**	**9065**	**9070**	**9075**	**9080**	**9085**	**9090**	**9095**	**9100**
Standard bearing model	250	950	1160	1500	2350	2700	3200	3350	3250	2750	4400	2850	2850	2400	2400	3200	5300	4600
	160	950	1160	1850	2350	2900	3200	3400	3250	2950	4400	2900	2900	2800	2800	3500	5400	5400
	100	950	1160	2500	2350	3350	3200	3800	3250	3500	4400	4050	4050	3350	3350	4400	6050	5950
	63	950	1160	2700	2350	3350	3200	3800	3250	5000	4400	5350	5350	4650	4650	5500	6100	8300
	40	950	1160	2700	2350	3350	3200	3800	3250	5000	4400	6260	6260	6450	6150	6100	6100	8500
	≦ 25	950	1160	2700	2350	3350	3200	3800	3250	5000	4400	6260	6260	6900	6150	6100	6100	8500
Heavy duty bearing model	250									2350	3550	1900	1900	5800	5800	6100	6100	8500
	160									2550	3400	2150	2150	5800	5800	6100	6100	8500
	100									3000	3750	2800	2800	5800	5800	6100	6100	8500
	63									4000	4400	3700	3700	5800	5800	6100	6100	8500
	40									4000	4400	5000	5000	5800	5800	6100	6100	8500
	≦ 25									4000	4400	5800	5800	5800	5800	6100	6100	8500

SELECTION Allowable Radial and Axial Loads on Slow Speed Parallel shaft

Size of Reducer									L.Speed Shaft Speed r/min	
9105	**9110**	**9115**	**9118**	**9121**	**9126**	**9128**	**9131**	**9136**		
19600	17100	22700							250	Standard bearing model
20450	17750	23950							160	
18750	18850	25050	39950	35950	33700	32150	41100	39950	100	
18150	19450	30900	39500	37650	34800	33500	47150	43900	63	
17700	19850	32700	46900	45800	40900	41750	58350	52100	40	
17050	18850	32250	45700	56550	50700	54500	74800	65100	≦ 25	
21800	25550	32300							250	Heavy duty bearing model
20450	21900	34100							160	
18750	19900	34750							100	
18150	19450	34000							63	
17700	19850	32700							40	
17050	18850	32250							≦ 25	

Unit: kgf

Size of Reducer									L.Speed Shaft Speed r/min	
9105	**9110**	**9115**	**9118**	**9121**	**9126**	**9128**	**9131**	**9136**		
13400	9600	15550							250	Standard bearing model
14100	9400	15800							160	
14950	10300	17050	31800	23250	20150	16250	20750	19400	100	
20400	14750	22500	29800	24900	21000	17400	26600	22300	63	
24000	20300	25500	38050	32900	26200	25500	37650	29200	40	
31000	27800	36000	46900	43550	35550	38050	53850	40600	≦ 25	
21750	19500	25350							250	Heavy duty bearing model
22750	20150	26650							160	
24150	21450	27950							100	
30750	27300	34850							63	
31000	33000	38950							40	
31000	33000	38200							≦ 25	

Unit: kgf

Size of Reducer									L.Speed Shaft Speed r/min	
9105	**9110**	**9115**	**9118**	**9121**	**9126**	**9128**	**9131**	**9136**		
5100	5100	7800							250	Standard bearing model
5050	5050	7800							160	
5500	5500	8500	12200	12400	11900	9300	11550	11000	100	
7600	7600	8500	12200	12400	12400	9850	14300	12500	63	
8500	8500	8500	12200	12400	12400	13750	19500	15850	40	
8500	8500	8500	12200	12400	12400	14700	19600	19600	≦ 25	
8500	8500	8500							250	Heavy duty bearing model
8500	8500	8500							160	
8500	8500	8500							100	
8500	8500	8500							63	
8500	8500	8500							40	
8500	8500	8500							≦ 25	

Unit: kgf

Overhang Factor

Overhang Member	Overhang Factor
Sprocket (Single Row)	1
Sprocket (Double Row)	1.25
Gears	1.25

Notes

1. The value shown in the table is allowable radial load when it is applied to the center of the solid shaft (except hollow shaft).
   Consult us when a load is not in the center.
2. Consult us for the blanks in the table.
3. Consult us when the radial load is applied upward.
4. In case of double projection shaft (RB,LB,BB)
   (1) See sheet1 when the radial load is applied only to the shaft1.
   (2) See sheet2 when the radial load is applied only to the shaft2.
   (3) Consult us when the radial load is applied to both shafts.
5. Refer to B-6 to check overhang load, and calculate equivalent load at peak load value.
   Be careful under following condition because large peak load may be generated.
   Application: When the inertia is large, such as for crane driving, slewing, etc.
   Motor: inline motor
   Connecting method: Sprocket or gear
   Consult us when the peak load is larger than allowable value.

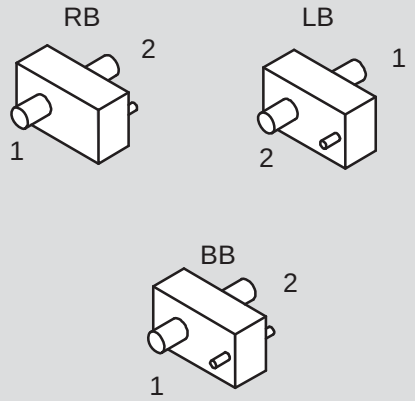

DIMENSIONS Parallel Shaft Double Reduction Horizontal Mounting 9015 ▶ 9055

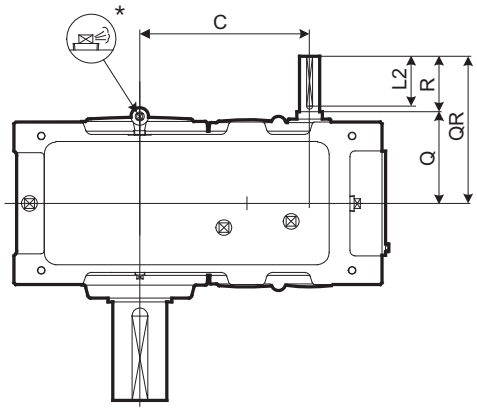

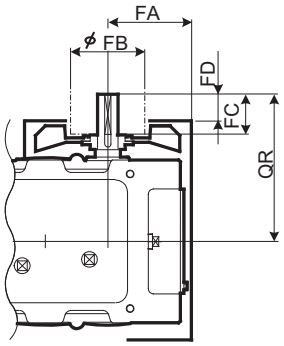

With Fan

Refer to the page C-22 for details.

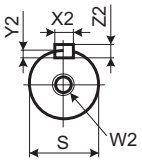

High Speed Shaft

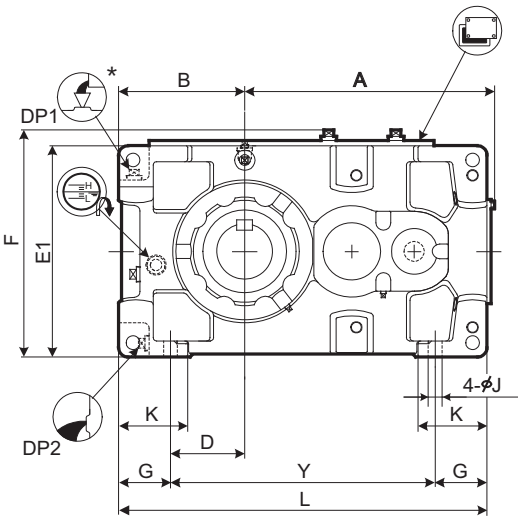

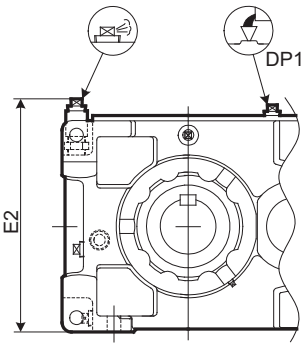

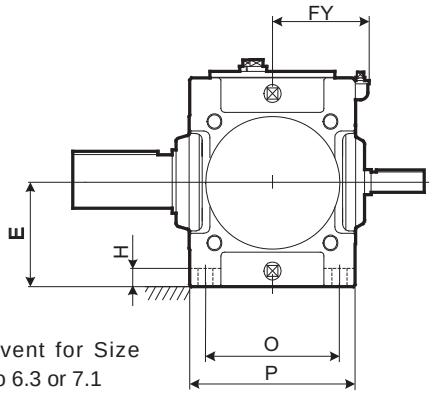

[Fig. 1]
Location of oil fill and air vent for Size 9015~9030 with reduction ratio 6.3 or 7.1

* Location of oil fill and air vent changes for Size 9015~9030 with reduction ratio 6.3 or 7.1. Refer to Fig. 1.

Size	A	B	C	D	E	E1	E2	F	FY	G	H	J	K	L	O	P	Y
9015	295	160	194	90	135	270	309	299	129	70	22	15	95	440	170	205	300
9025	346	175	227	95	155	310	346	339	142	80	25	19	110	505	195	235	345
9030	406	200	264	110	160	320	353	349	154	90	28	24	120	590	215	265	410
9035	437	219	295	129	185	370		399	154	90	28	24	120	640	215	265	460
9040	467	235	306	120	200	400		431	172	115	30	28	150	685	255	315	455
9045	506	256	345	141	220	440		471	172	115	30	28	150	745	255	315	515
9050	537	255	358	138.5	210	420		451	192	116.5	32	28	150	775	285	345	542
9055	576	286	397	171	245	490		521	192	115	32	28	150	845	285	345	615

Size	High Speed Shaft									Fan				DP1	DP2	Wt. kg	Oil Qty. L
	Q	QR	R	S	W2/Depth	Key				FA	FB	FC	FD				
						X2	Y2	Z2	L2								
9015	131	211	80	30k6	M10/22	8	4	7	70	129	125	50	30	3/4"	3/4"	100	5
9025	146	226	80	35k6	M12/28	10	5	8	70	143	140	50	30	3/4"	3/4"	140	7
9030	159	269	110	40k6	M16/36	12	5	8	95	169	140	80	52	3/4"	3/4"	195	10
9035	159	269	110	40k6	M16/36	12	5	8	95	169	140	80	52	3/4"	3/4"	215	12
9040	174	284	110	50k6	M16/36	14	5.5	9	95	188	160	80	52	1"	1"	285	16
9045	174	284	110	50k6	M16/36	14	5.5	9	95	188	160	80	52	1"	1"	345	18
9050	193	303	110	55m6	M20/42	16	6	10	95	208	160	80	52	1"	1"	415	21
9055	193	303	110	55m6	M20/42	16	6	10	95	208	160	80	52	1"	1"	475	28

Unit: mm

1. Key and keyways are based on ISO R773-1969 Close keys (JIS B1301-1996 Parallel key in fastening type)
2. The oil quantity is approximate. Oil shall be supplied within the range shown on the oil gauge.
3. Refer to the page C-12 for dimensions shown in these drawings.
4. Refer to the page C-24 for the dimension of optional parts.
5. When fastening the mounting bolt, it is necessary to remove the fan food.

DIMENSIONS Parallel Shaft Double Reduction Horizontal Mounting 9015 ▶ 9055

Slow Speed Shaft

Solid Shaft	Hollow Shaft (Shrink Disk Type)	Hollow Shaft (Key Type)
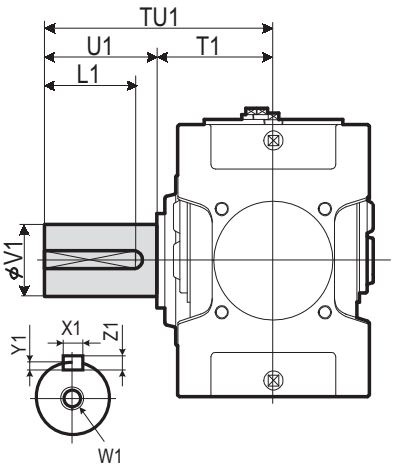	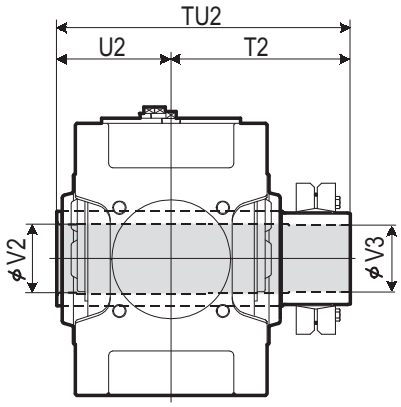 Refer to the page C -18 for details.	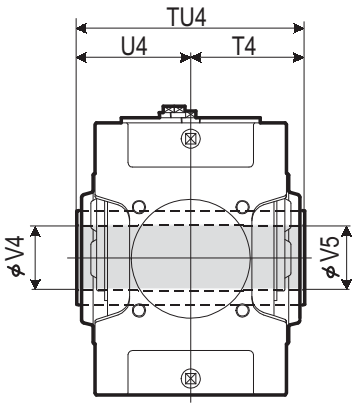 Refer to the page C -18 for details.

Size	Solid Shaft									Hollow Shaft (Shrink Disk Type)					Hollow Shaft (Key Type)				
	TU1	T1	U1	V1	W1/Depth	Key X1	Key Y1	Key Z1	Key L1	TU2	T2	U2	V2	V3	TU4	T4	U4	V4	V5
9015	245	135	110	58m6	M20/42	18	7	11	95	328	193	135	63	60	270	135	135	55	55
9025	285	145	140	70m6	M20/42	20	7.5	12	125	358	213	145	73	70	300	150	150	65	65
9030	330	160	170	80m6	M20/42	22	9	14	150	393	233	160	83	80	330	165	165	75	75
9035	330	160	170	90m6	M20/42	25	9	14	150	403	243	160	88	85	330	165	165	85	85
9040	349	179	170	95m6	M24/50	25	9	14	150	448	268	180	98	95	360	180	180	90	90
9045	391	181	210	105m6	M24/50	28	10	16	190	463	283	180	108	105	370	185	185	105	105
9050	411	201	210	110m6	M24/50	28	10	16	190	503	303	200	108	105	410	205	205	105	105
9055	411	201	210	120m6	M24/50	32	11	18	185	528	323	205	123	120	410	205	205	115	115

Unit: mm

Standard Shaft Arrangement Configuration

RL	RR	RB	LR	LL	LB	BL	BR	BB
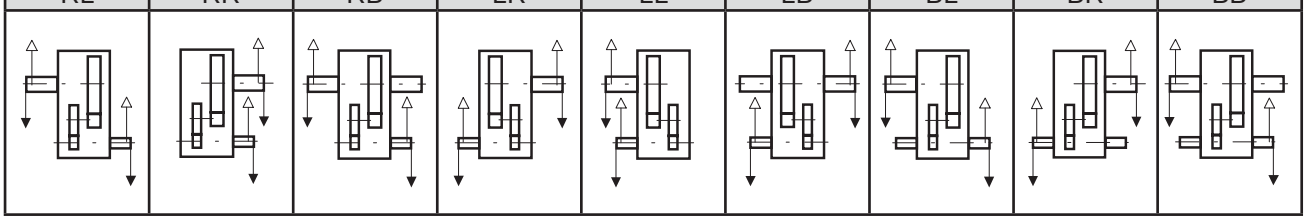								

Nomenclature

P H A [ ] P 2 - [ ] [ ] [ ] - [ ]

Size: 9015, 9025, 9030, 9035, 9040, 9045, 9050, 9055

Shaft Arrangement: RL, RR, RB, LR, LL, LB, BL, BR, BB

Low Speed Shaft Type:
- (blank): Solid Shaft
- T : Hollow Shaft (Shrink Disk type)
- K : Hollow Shaft (Key type)

Fan:
- (blank) : Without Fan
- F : With Fan

Nominal Reduction Ratio

Size	6.3	7.1	8	9	10	11.2	12.5	14	16	18	20	22.4
9015	○	○	○	○	○	○	○	○	○	○		
9025	○	○	○	○	○	○	○	○	○	○		
9030	○	○	○	○	○	○	○	○	○	○		
9035			○	○	○	○	○	○	○	○	○	○
9040	○	○	○	○	○	○	○	○	○	○		
9045			○	○	○	○	○	○	○	○	○	○
9050	○	○	○	○	○	○	○	○	○	○		
9055			○	○	○	○	○	○	○	○	○	○

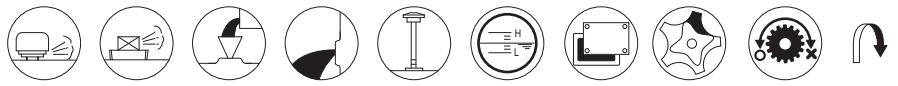

Air Breather, Air Vent, Oil Fill, Drain Plug, Dip Stick, Oil Gauge, Inspection Cover, Oil Pump, Backstop (Option), Opposite Side

DIMENSIONS Parallel Shaft Double Reduction Horizontal Mounting 9060 ▶ 9085

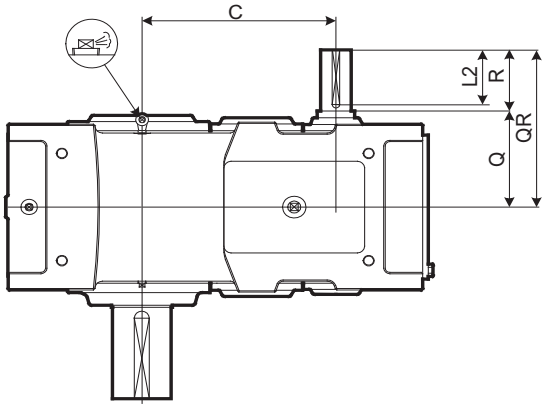

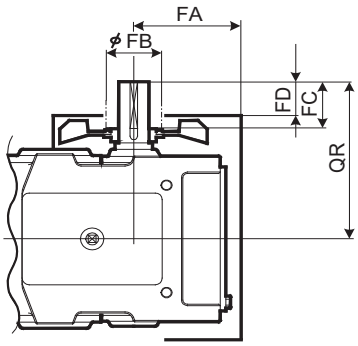

With Fan

Refer to the page C-22 for details.

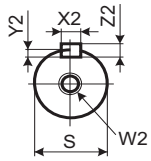

High Speed Shaft

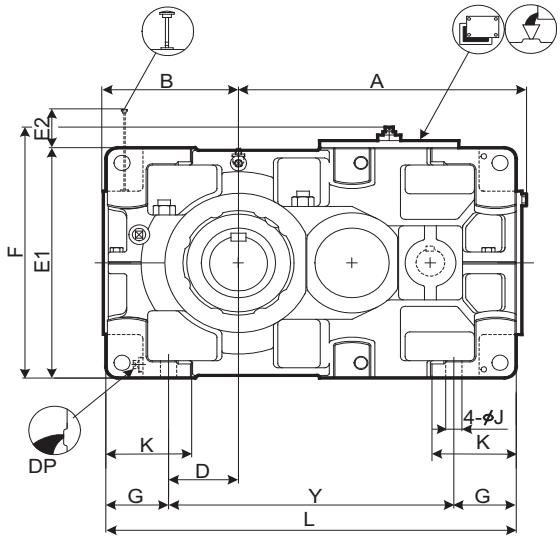

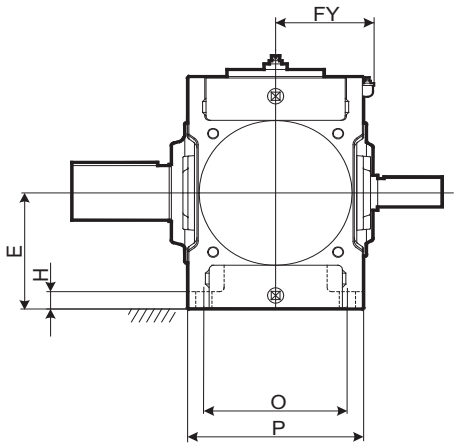

Size	A	B	C	D	E	E1	E2	F	FY	G	H	J	K	L	O	P	Y
9060	621	299	414	151	265	530	183	578	212	135	35	35	180	885	310	380	615
9065	667	338	460	190	300	600	148	648	212	135	35	35	180	970	310	380	700
9070	719	336	482	163	300	600	213	648	237	160	40	42	215	1020	350	430	700
9075	772	383	535	210	335	670	178	718	237	160	52	42	220	1120	350	430	800
9080	812	378	556	205	335	670	233	718	257	160	52	42	220	1155	380	460	835
9085	868	422	612	249	375	750	193	798	257	160	52	42	220	1255	380	460	935

Size	High Speed Shaft									Fan				DP	Wt. kg	Oil Qty. L
	Q	QR	R	S	W2/Depth	Key				FA	FB	FC	FD			
						X2	Y2	Z2	L2							
9060	220	360	140	65m6	M20/42	18	7	11	125	240	200	105	65	1"	610	25
9065	220	360	140	65m6	M20/42	18	7	11	125	240	200	105	65	1"	735	32
9070	245	385	140	75m6	M20/42	20	7.5	12	125	274	225	105	65	1"	860	38
9075	245	385	140	75m6	M20/42	20	7.5	12	125	274	225	105	65	1"	1110	47
9080	264	434	170	85m6	M20/42	22	9	14	150	296	225	135	95	1"	1240	54
9085	264	434	170	85m6	M20/42	22	9	14	150	296	225	135	95	1"	1500	68

Unit: mm

1. Key and keyways are based on ISO R773-1969 Close keys (JIS B1301-1996 Parallel key in fastening type)
2. The oil quantity is approximate. Oil shall be supplied within the range shown on the oil gauge.
3. When fastening the mounting bolt, it is necessary to remove the fan food.
4. Refer to the page C-14 for dimensions not shown in these drawings.
5. Refer to the page C-27 for the dimension of optional parts.

DIMENSIONS Parallel Shaft Double Reduction Horizontal Mounting 9060 ▶ 9085

Slow Speed Shaft

Solid Shaft	Hollow Shaft (Shrink Disk Type)	Hollow Shaft (Key Type)
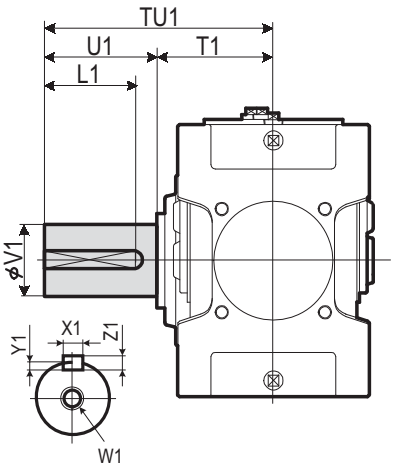	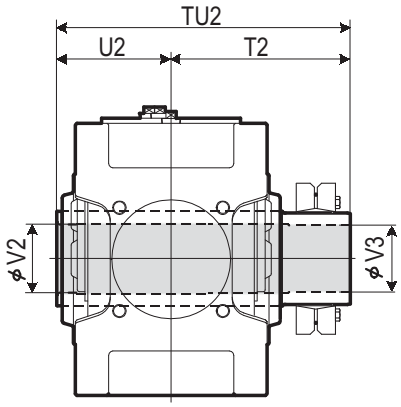 Refer to the page C -18 for details.	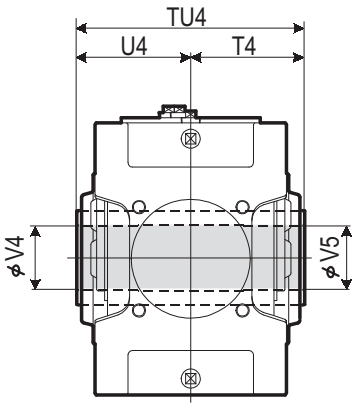 Refer to the page C -18 for details.

Size	Solid Shaft									Hollow Shaft (Shrink Disk Type)					Hollow Shaft (Key Type)				
	TU1	T1	U1	V1	W1/Depth	Key X1	Y1	Z1	L1	TU2	T2	U2	V2	V3	TU4	T4	U4	V4	V5
9060	440	230	210	125m6	M24/50	32	11	18	185	583	353	230	128	125	470	235	235	125	123
9065	484	234	250	140m6	M30/60	36	12	20	225	594	359	235	143	140	480	240	240	145	143
9070	509	259	250	145m6	M30/60	36	12	20	225	644	384	260	148	145	530	265	265	145	143
9075	562	262	300	160m6	M30/60	40	13	22	275	651	386	265	158	155	530	265	265	150	148
9080	582	282	300	165m6	M30/60	40	13	22	275	714	429	285	173	170	570	285	285	165	163
9085	585	285	300	175m6	M30/60	45	15	25	270	714	429	285	183	180	570	285	285	175	173

Unit: mm

Standard Shaft Arrangement Configuration

RL	RR	RB	LR	LL	LB	BL	BR	BB
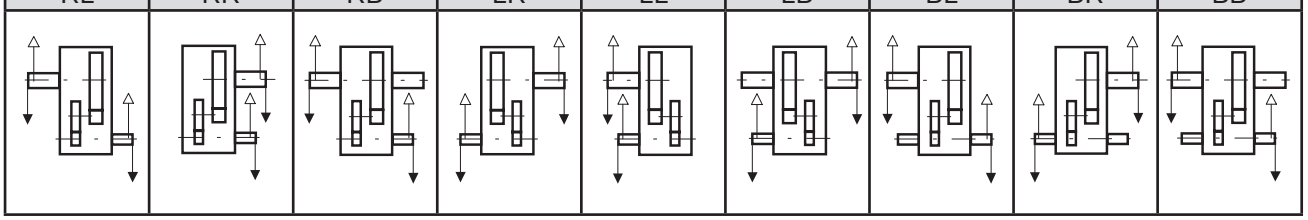								

Nomenclature

P H D [ ] P 2 - [ ] [ ] [ ] - [ ]

Size: 9060, 9065, 9070, 9075, 9080, 9085

Shaft Arrangement: RL, RR, RB, LR, LL, LB, BL, BR, BB

Low Speed Shaft Type: (blank) : Solid Shaft; T : Hollow Shaft (Shrink Disk type); K : Hollow Shaft (Key type)

Fan: (blank) : Without Fan; F : With Fan

Nominal Reduction Ratio

Size	6.3	7.1	8	9	10	11.2	12.5	14	16	18	20	22.4
9060	○	○	○	○	○	○	○	○	○	○		
9065			○	○	○	○	○	○	○	○	○	○
9070	○	○	○	○	○	○	○	○	○	○		
9075			○	○	○	○	○	○	○	○	○	○
9080	○	○	○	○	○	○	○	○	○	○		
9085			○	○	○	○	○	○	○	○	○	○

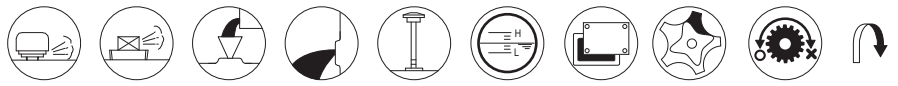

Air Breather, Air Vent, Oil Fill, Drain Plug, Dip Stick, Oil Gauge, Inspection Cover, Oil Pump, Backstop (Option), Opposite Side

DIMENSIONS Parallel Shaft Double Reduction Horizontal Mounting 9090 ▶ 9115

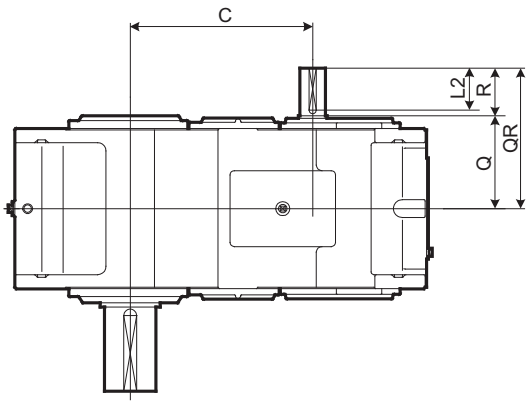

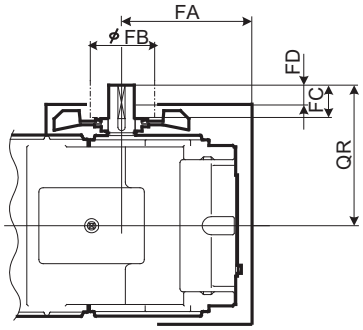

With Fan

Refer to the page C-22 for details.

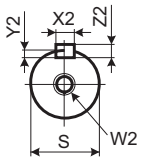

High Speed Shaft

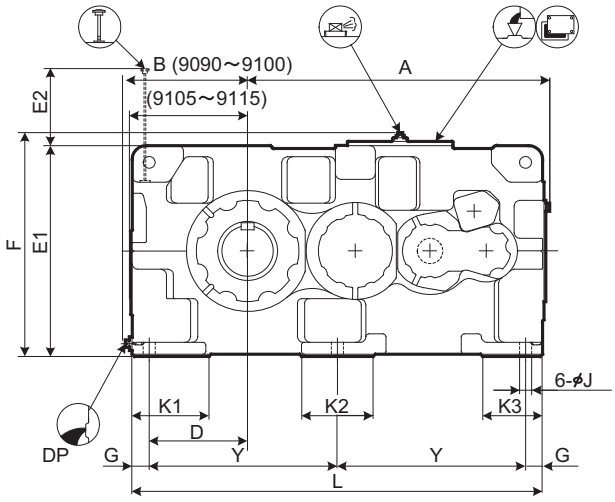

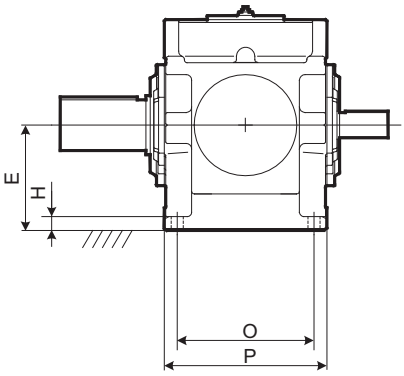

Size	A	B	C	D	E	E1	E2	F	G	H	J	K1	K2	K3	L	O	P	Y
9090	1060	428	640	345	375	750	274	797	60	50	42	270	250	210	1440	480	570	660
9095	1090	458	670	375	400	800	286	847	60	50	42	290	250	210	1500	480	570	690
9100	1194	468	724	375	425	850	299	897	70	55	48	300	280	240	1610	560	650	735
9105	1228	493	758	410	450	900	316	947	70	55	48	320	280	240	1680	560	650	770
9110	1344	508	824	420	475	950	321	997	75	60	56	340	310	260	1810	610	710	830
9115	1393	558	873	470	500	1000	333	1047	75	60	56	350	310	260	1910	610	710	880

Size	High Speed Shaft									Fan				DP	Wt. kg	Oil Qty. L
	Q	QR	R	S	W2/Depth	Key				FA	FB	FC	FD			
						X2	Y2	Z2	L2							
9090	330	500	170	90m6	M24/50	25	9	14	150	465	250	135	90	1 1/2"	2050	120
9095	330	500	170	90m6	M24/50	25	9	14	150	465	250	135	90	1 1/2"	2300	140
9100	375	585	210	100m6	M24/50	28	10	16	190	515	250	175	130	1 1/2"	2730	170
9105	375	585	210	100m6	M24/50	28	10	16	190	515	250	175	130	1 1/2"	3290	205
9110	405	615	210	110m6	M24/50	28	10	16	190	565	250	175	130	1 1/2"	3960	240
9115	405	615	210	110m6	M24/50	28	10	16	190	565	250	175	130	1 1/2"	4410	290

Unit: mm

1. Key and keyways are based on ISO R773-1969 Close keys (JIS B1301-1996 Parallel key in fastening type)
2. The oil quantity is approximate. Oil shall be supplied within the range shown on the oil gauge.
3. Refer to the page C-16 for dimensions not shown in these drawings.
4. Refer to the page C-30 for the dimension of optional parts.

DIMENSIONS Parallel Shaft Double Reduction Horizontal Mounting 9090 ▶ 9115

Slow Speed Shaft

Solid Shaft	Hollow Shaft (Shrink Disk Type)
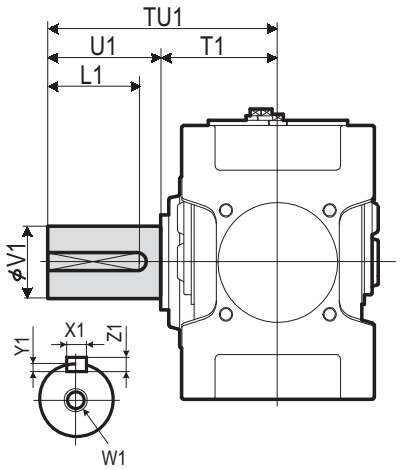	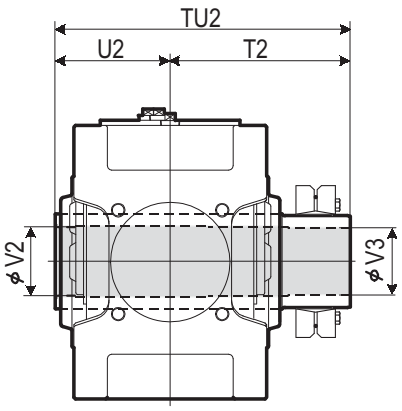 Refer to the page C -18 for details.

Size	Solid Shaft									Hollow Shaft (Shrink Disk Type)				
	TU1	T1	U1	V1	W1/Depth	Key X1	Key Y1	Key Z1	Key L1	TU2	T2	U2	V2	V3
9090	650	350	300	180m6	M30/60	45	15	25	270	844	494	350	193	190
9095	700	350	350	190m6	M30/60	45	15	25	320	859	509	350	203	200
9100	740	390	350	200m6	M30/60	45	15	25	320	934	544	390	213	210
9105	740	390	350	220m6	M30/60	50	17	28	320	949	559	390	223	220
9110	770	420	350	220m6	M30/60	50	17	28	320	1030	610	420	243	240
9115	830	420	410	240m6	M30/60	56	20	32	375	1065	645	420	253	250

Unit: mm

Standard Shaft Arrangement Configuration

RL	RR	RB	LR	LL	LB	BL	BR	BB
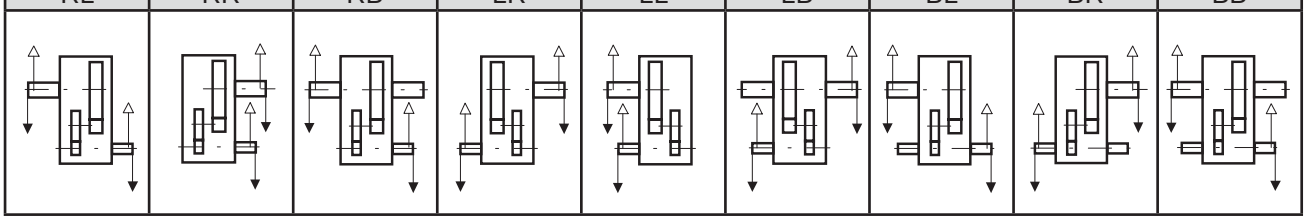								

Nomenclature

P H D [ ] P 2 - [ ] [ ] [ ] - [ ]

Size: 9090, 9095, 9100, 9105, 9110, 9115

Shaft Arrangement: RL, RR, RB, LR, LL, LB, BL, BR, BB

Low Speed Shaft Type: (blank) : Solid Shaft; T : Hollow Shaft (Shrink Disk type)

Fan: (blank) : Without Fan; F : With Fan

Nominal Reduction Ratio

Size	6.3	7.1	8	9	10	11.2	12.5	14	16	18	20
9090	○	○	○	○	○	○	○	○	○	○	
9095		○	○	○	○	○	○	○	○	○	○
9100	○	○	○	○	○	○	○	○	○	○	
9105		○	○	○	○	○	○	○	○	○	○
9110	○	○	○	○	○	○	○	○	○	○	
9115		○	○	○	○	○	○	○	○	○	○

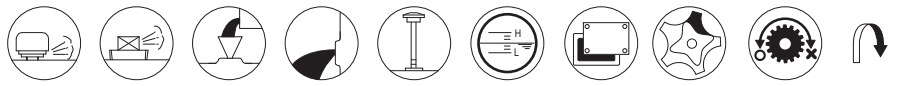

Air Breather, Air Vent, Oil Fill, Drain Plug, Dip Stick, Oil Gauge, Inspection Cover, Oil Pump, Backstop (Option), Opposite Side

DIMENSIONS Parallel Shaft Triple Reduction Horizontal Mounting 9015 ▶ 9055

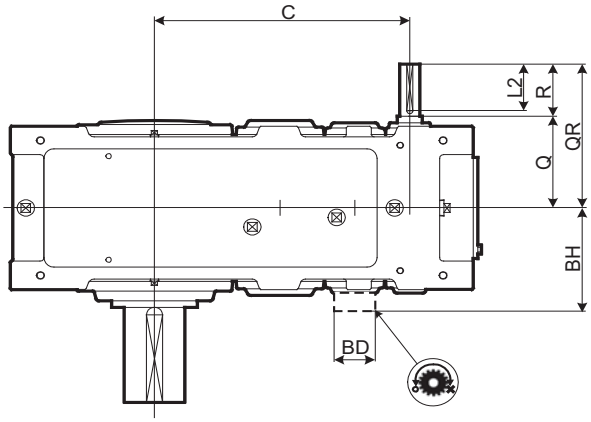

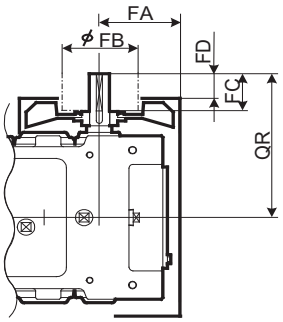

With Fan

Refer to the page C-23 for details.

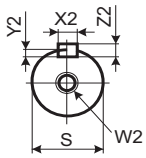

High Speed Shaft

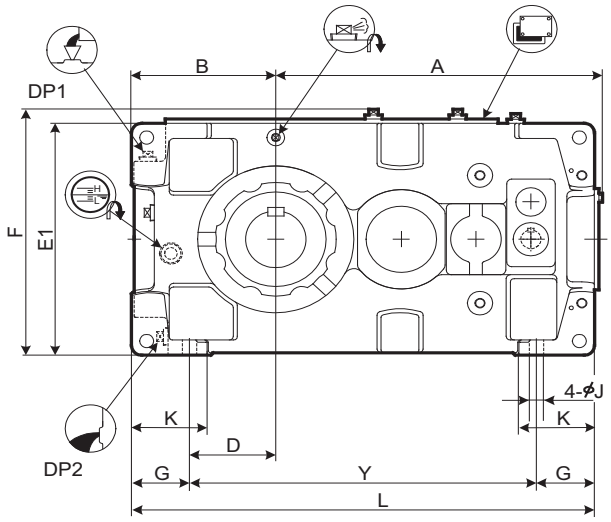

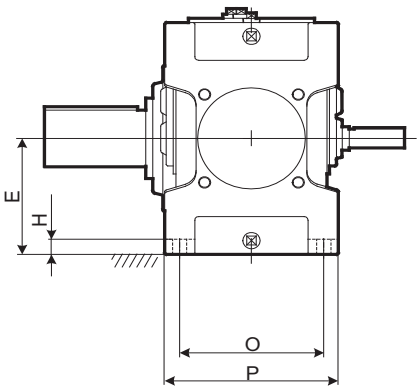

Size	A	B	C	D	E	E1	F	G	H	J	K	L	O	P	Y
9015	338	160	257	90	135	270	299	70	22	15	95	485	170	205	345
9025	408	175	306	95	155	310	339	80	25	19	110	570	195	235	410
9030	453	200	343	110	160	320	349	90	28	24	120	640	215	265	460
9035	484	219	374	129	185	370	399	90	28	24	120	690	215	265	510
9040	540	235	398	120	200	400	431	115	30	28	150	759	255	315	529
9045	577	256	437	141	220	440	471	115	30	28	150	819	255	315	589
9050	609	255	467	138.5	210	420	451	116.5	32	28	150	848	285	345	615
9055	648	286	506	171	245	490	521	115	32	28	150	918	285	345	688

Size	High Speed Shaft									Fan				Backstop		DP1	DP2	Wt. kg	Oil Qty. L
	Q	QR	R	S	W2/Depth	Key				FA	FB	FC	FD	BD	BH				
						X2	Y2	Z2	L2										
9015	130	190	60	25k6	M10/22	8	4	7	50	111	125	30	10			3/4"	3/4"	105	5
9025	144	204	60	28k6	M10/22	8	4	7	50	129	125	30	10			3/4"	3/4"	150	8
9030	161	241	80	30k6	M10/22	8	4	7	70	140	125	50	30			3/4"	3/4"	205	10
9035	161	241	80	30k6	M10/22	8	4	7	70	150	140	50	22			3/4"	3/4"	225	13
9040	176	256	80	35k6	M12/28	10	5	8	70	170	140	50	22			1"	1"	305	19
9045	176	256	80	35k6	M12/28	10	5	8	70	170	140	50	22			1"	1"	375	21
9050	194	304	110	40k6	M16/36	12	5	8	95	172	140	80	52	150	263	1"	1"	445	24
9055	194	304	110	40k6	M16/36	12	5	8	95	172	140	80	52	150	263	1"	1"	505	29

Unit: mm

1. Key and keyways are based on ISO R773-1969 Close keys (JIS B1301-1996 Parallel key in fastening type)
2. The oil quantity is approximate. Oil shall be supplied within the range shown on the oil gauge.
3. When fastening the mounting bolt, it is necessary to remove the fan food.
4. Refer to the page C -13 for dimensions not shown in these drawings.
5. Refer to the page C -24 for the dimension of optional parts.

DIMENSIONS Parallel Shaft Triple Reduction Horizontal Mounting 9015 ▶ 9055

Slow Speed Shaft

Solid Shaft	Hollow Shaft (Shrink Disk Type)	Hollow Shaft (Key Type)
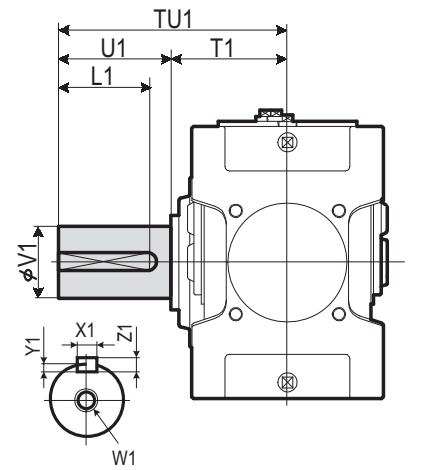	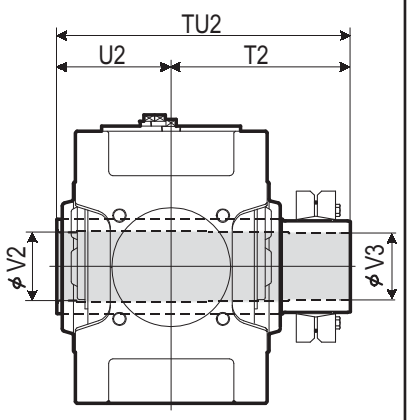 Refer to the page C -18 for details.	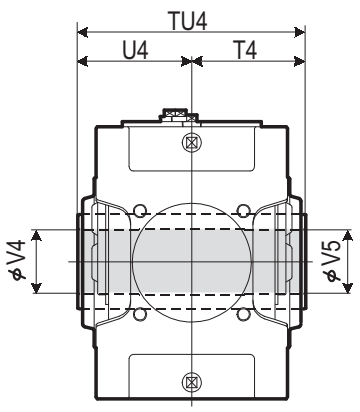 Refer to the page C -18 for details.

Size	Solid Shaft									Hollow Shaft (Shrink Disk Type)					Hollow Shaft (Key Type)				
	TU1	T1	U1	V1	W1/Depth	Key X1	Key Y1	Key Z1	Key L1	TU2	T2	U2	V2	V3	TU4	T4	U4	V4	V5
9015	245	135	110	58m6	M20/42	18	7	11	95	328	193	135	63	60	270	135	135	55	55
9025	285	145	140	70m6	M20/42	20	7.5	12	125	358	213	145	73	70	300	150	150	65	65
9030	330	160	170	80m6	M20/42	22	9	14	150	393	233	160	83	80	330	165	165	75	75
9035	330	160	170	90m6	M20/42	25	9	14	150	403	243	160	88	85	330	165	165	85	85
9040	349	179	170	95m6	M24/50	25	9	14	150	448	268	180	98	95	360	180	180	90	90
9045	391	181	210	105m6	M24/50	28	10	16	190	463	283	180	108	105	370	185	185	105	105
9050	411	201	210	110m6	M24/50	28	10	16	190	503	303	200	108	105	410	205	205	105	105
9055	411	201	210	120m6	M24/50	32	11	18	185	528	323	205	123	120	410	205	205	115	115

Unit: mm

Standard Shaft Arrangement Configuration

RL	RR	RB	LR	LL	LB	BL	BR	BB
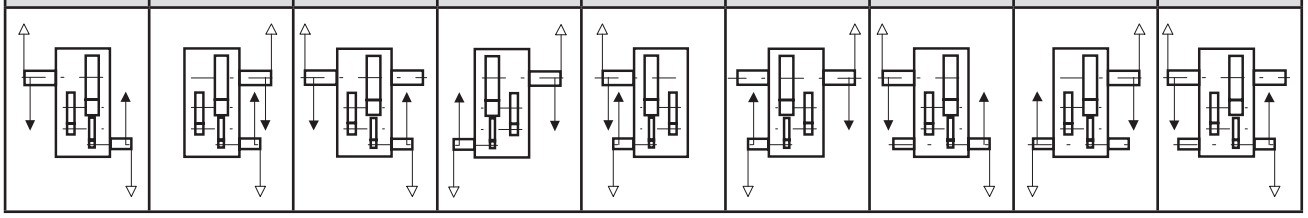								

Nomenclature

P H A [ ] P 3 - [ ] [ ] [ ] - [ ]

Size: 9015, 9025, 9030, 9035, 9040, 9045, 9050, 9055

Shaft Arrangement: RL, RR, RB, LR, LL, LB, BL, BR, BB

Low Speed Shaft Type:
(blank): Solid Shaft
T : Hollow Shaft (Shrink Disk type)
K : Hollow Shaft (Key type)

Option:
(blank) : Without Fan
F : With Fan
B : With Backstop
FB : With Fan & Backstop

Nominal Reduction Ratio

Size	Nominal Reduction Ratio 20	22.4	25	28	31.5	35.5	40	45	50	56	63	71	80	90
9015	○	○	○	○	○	○	○	○						
9025	○	○	○	○	○	○	○	○						
9030	○	○	○	○	○	○	○	○	○	○	○	○		
9035			○	○	○	○	○	○	○	○	○	○	○	○
9040	○	○	○	○	○	○	○	○	○	○	○	○		
9045			○	○	○	○	○	○	○	○	○	○	○	○
9050	○	○	○	○	○	○	○	○	○	○	○	○		
9055			○	○	○	○	○	○	○	○	○	○	○	○

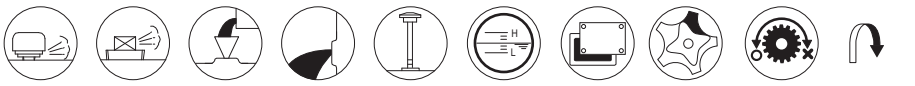

Air Breather, Air Vent, Oil Fill, Drain Plug, Dip Stick, Oil Gauge, Inspection Cover, Oil Pump, Backstop (Option), Opposite Side

DIMENSIONS Parallel Shaft Triple Reduction Horizontal Mounting 9060 ▶ 9085

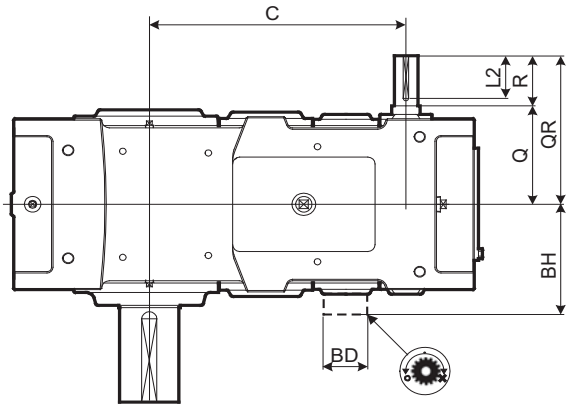

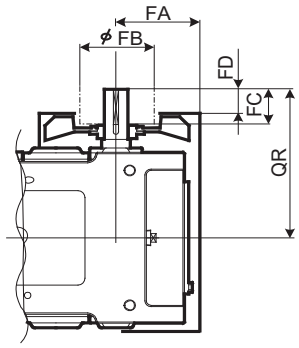

With Fan

Refer to the page C-23 for details.

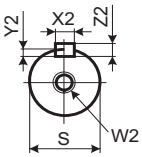

High Speed Shaft

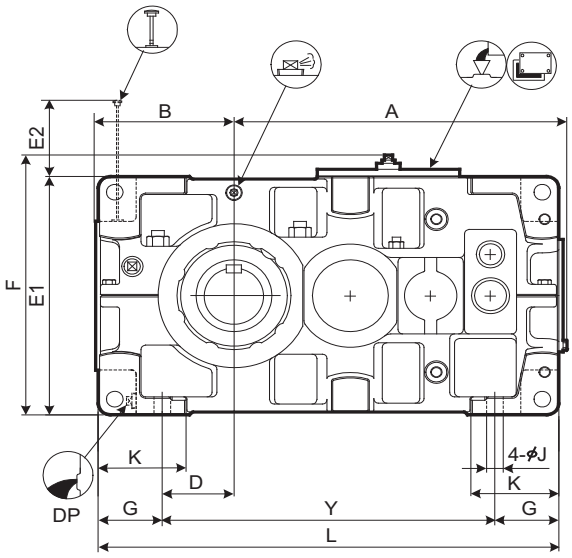

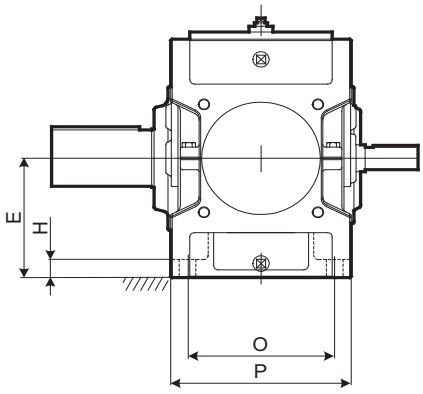

Size	A	B	C	D	E	E1	E2	F	G	H	J	K	L	O	P	Y
9060	701	299	540	151	265	530	155	578	135	35	35	180	970	310	380	700
9065	747	338	586	190	300	600	120	648	135	35	35	180	1055	310	380	785
9070	809	336	630	163	300	600	181	648	160	40	42	215	1115	350	430	795
9075	862	383	683	210	335	670	146	718	160	52	42	220	1215	350	430	895
9080	932	378	725	205	335	670	205	718	160	52	42	220	1275	380	460	955
9085	988	422	781	249	375	750	165	798	160	52	42	220	1375	380	460	1055

Size	High Speed Shaft									Fan				Backstop		DP	Wt. kg	Oil Qty. L
	Q	QR	R	S	W2/Depth	Key X2	Key Y2	Key Z2	L2	FA	FB	FC	FD	BD	BH			
9060	219	329	110	50k6	M16/36	14	5.5	9	95	199	160	80	52	175	308	1"	660	33
9065	219	329	110	50k6	M16/36	14	5.5	9	95	199	160	80	52	175	308	1"	815	38
9070	244	354	110	55m6	M20/42	16	6	10	95	221	160	80	52	190	330	1"	940	49
9075	244	354	110	55m6	M20/42	16	6	10	95	221	160	80	52	190	330	1"	1160	59
9080	265	405	140	65m6	M20/42	18	7	11	125	247	200	105	65	210	365	1"	1350	64
9085	265	405	140	65m6	M20/42	18	7	11	125	247	200	105	65	210	365	1"	1610	80

Unit: mm

1. Key and keyways are based on ISO R773-1969 Close keys (JIS B1301-1996 Parallel key in fastening type)
2. The oil quantity is approximate. Oil shall be supplied within the range shown on the oil gauge.
3. When fastening the mounting bolt, it is necessary to remove the fan food.
4. Refer to the page C -15 for dimensions not shown in these drawings.
5. Refer to the page C -27 for the dimension of optional parts.

DIMENSIONS Parallel Shaft Triple Reduction Horizontal Mounting 9060 ▶ 9085

Slow Speed Shaft

Solid Shaft	Hollow Shaft (Shrink Disk Type)	Hollow Shaft (Key Type)
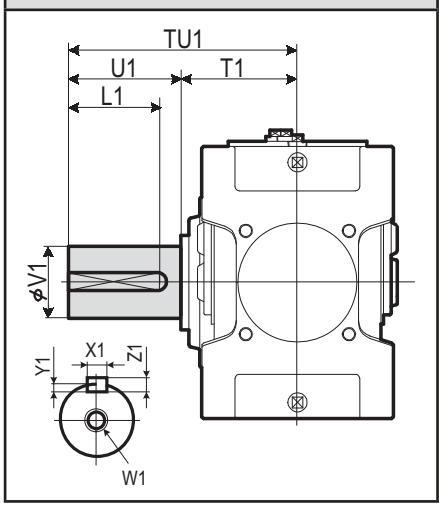	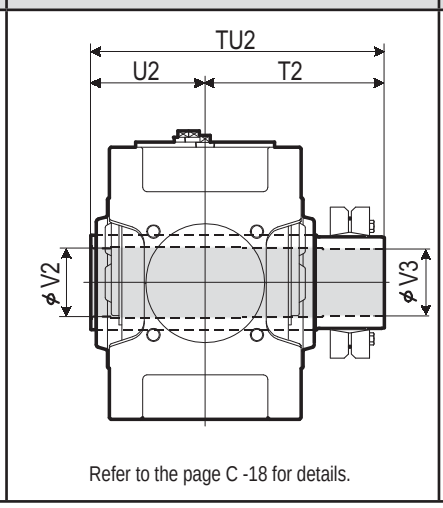 Refer to the page C -18 for details.	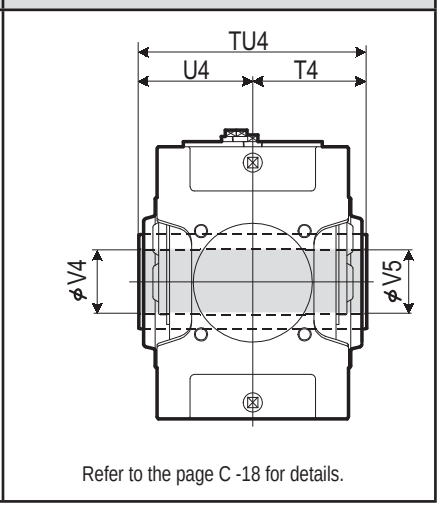 Refer to the page C -18 for details.

Size	Solid Shaft									Hollow Shaft (Shrink Disk Type)					Hollow Shaft (Key Type)				
	TU1	T1	U1	V1	W1/Depth	Key X1	Y1	Z1	L1	TU2	T2	U2	V2	V3	TU4	T4	U4	V4	V5
9060	440	230	210	125m6	M24/50	32	11	18	185	583	353	230	128	125	470	235	235	125	123
9065	484	234	250	140m6	M30/60	36	12	20	225	594	359	235	143	140	480	240	240	145	143
9070	509	259	250	145m6	M30/60	36	12	20	225	644	384	260	148	145	530	265	265	145	143
9075	562	262	300	160m6	M30/60	40	13	22	275	651	386	265	158	155	530	265	265	150	148
9080	582	282	300	165m6	M30/60	40	13	22	275	714	429	285	173	170	570	285	285	165	163
9085	585	285	300	175m6	M30/60	45	15	25	270	714	429	285	183	180	570	285	285	175	173

Unit: mm

Standard Shaft Arrangement Configuration

RL	RR	RB	LR	LL	LB	BL	BR	BB
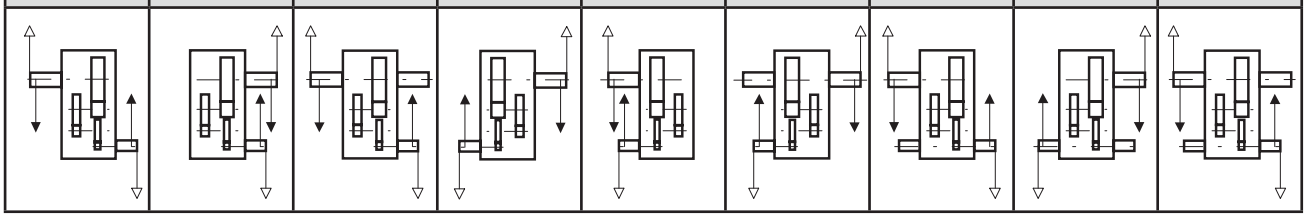								

Nomenclature

P H D [ ] P 3 - [ ] [ ] [ ] - [ ]

Size: 9060, 9065, 9070, 9075, 9080, 9085

Shaft Arrangement: RL, RR, RB, LR, LL, LB, BL, BR, BB

Low Speed Shaft Type:
- (blank) : Solid Shaft
- T : Hollow Shaft (Shrink Disk type)
- K : Hollow Shaft (Key type)

Option:
- (blank) : Without Fan
- F : With Fan
- B : With Backstop
- FB : With Fan & Backstop

Nominal Reduction Ratio

Size	20	22.4	25	28	31.5	35.5	40	45	50	56	63	71	80	90
9060	○	○	○	○	○	○	○	○	○	○	○	○		
9065			○	○	○	○	○	○	○	○	○	○	○	○
9070	○	○	○	○	○	○	○	○	○	○	○	○		
9075			○	○	○	○	○	○	○	○	○	○	○	○
9080	○	○	○	○	○	○	○	○	○	○	○	○		
9085			○	○	○	○	○	○	○	○	○	○	○	○

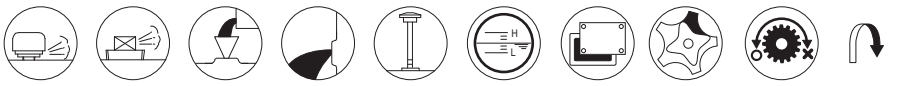

Air Breather, Air Vent, Oil Fill, Drain Plug, Dip Stick, Oil Gauge, Inspection Cover, Oil Pump, Backstop (Option), Opposite Side

DIMENSIONS Parallel Shaft Triple Reduction Horizontal Mounting 9090 ▶ 9115

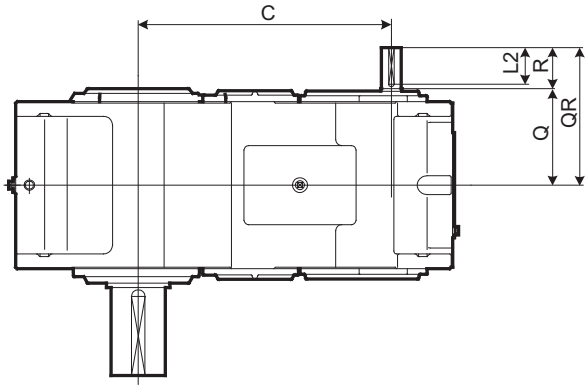

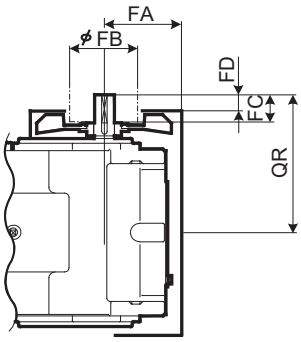

With Fan

Refer to the page C-23 for details.

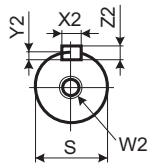

High Speed Shaft

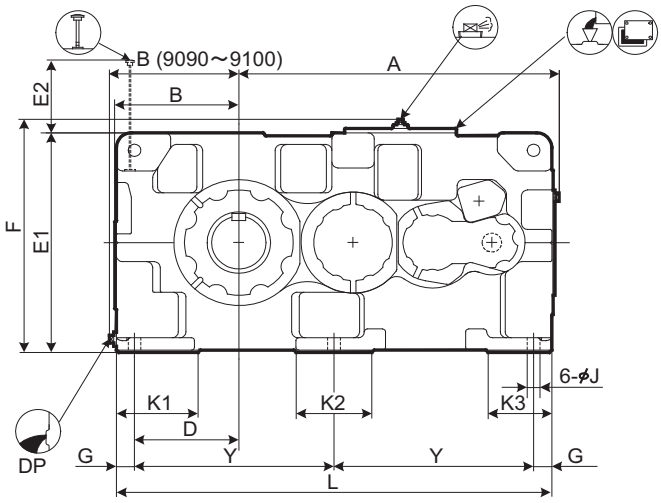

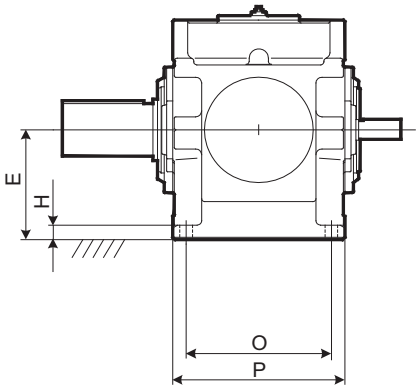

Size	A	B	C	D	E	E1	E2	F	G	H	J	K1	K2	K3	L	O	P	Y
9090	1060	428	837	345	375	750	249	797	60	50	42	270	250	210	1440	480	570	660
9095	1090	458	867	375	400	800	254	847	60	50	42	290	250	210	1500	480	570	690
9100	1194	468	950	375	425	850	273	897	70	55	48	300	280	240	1610	560	650	735
9105	1228	493	984	410	450	900	278	947	70	55	48	320	280	240	1680	560	650	770
9110	1344	508	1050	420	475	950	283	997	75	60	56	340	310	260	1810	610	710	830
9115	1393	558	1099	470	500	1000	282	1047	75	60	56	350	310	260	1910	610	710	880

Size	High Speed Shaft									Fan				DP	Wt. kg	Oil Qty. L
	Q	QR	R	S	W2/Depth	Key				FA	FB	FC	FD			
						X2	Y2	Z2	L2							
9090	330	470	140	65m6	M20/42	18	7	11	125	268	200	105	65	1 1/2"	2100	120
9095	330	470	140	65m6	M20/42	18	7	11	125	268	200	105	65	1 1/2"	2350	155
9100	375	515	140	75m6	M20/42	20	7.5	12	125	289	225	105	65	1 1/2"	2780	180
9105	375	515	140	75m6	M20/42	20	7.5	12	125	289	225	105	65	1 1/2"	3340	225
9110	405	575	170	80m6	M20/42	22	9	14	150	339	225	135	95	1 1/2"	4010	260
9115	405	575	170	80m6	M20/42	22	9	14	150	339	225	135	95	1 1/2"	4460	325

Unit: mm

1. Key and keyways are based on ISO R773-1969 Close keys (JIS B1301-1996 Parallel key in fastening type)
2. The oil quantity is approximate. Oil shall be supplied within the range shown on the oil gauge.
3. Refer to the page C -16 for dimensions not shown in these drawings.
4. Refer to the page C -30 for the dimension of optional parts.

DIMENSIONS Parallel Shaft Triple Reduction Horizontal Mounting 9090 ▶ 9115

Slow Speed Shaft

Solid Shaft	Hollow Shaft (Shrink Disk Type)
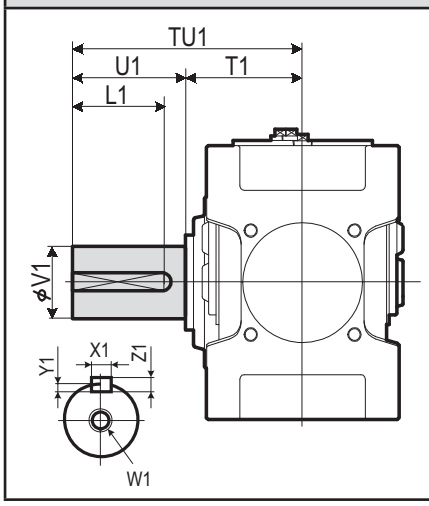	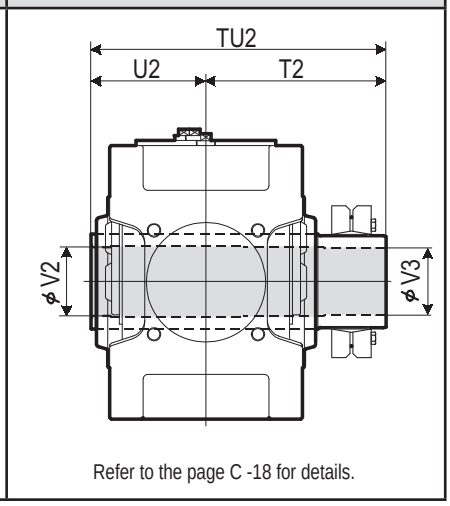 Refer to the page C -18 for details.

Size	Solid Shaft									Hollow Shaft (Shrink Disk Type)				
	TU1	T1	U1	V1	W1/Depth	Key X1	Key Y1	Key Z1	Key L1	TU2	T2	U2	V2	V3
9090	650	350	300	180m6	M30/60	45	15	25	270	844	494	350	193	190
9095	700	350	350	190m6	M30/60	45	15	25	320	859	509	350	203	200
9100	740	390	350	200m6	M30/60	45	15	25	320	934	544	390	213	210
9105	740	390	350	220m6	M30/60	50	17	28	320	949	559	390	223	220
9110	770	420	350	220m6	M30/60	50	17	28	320	1030	610	420	243	240
9115	830	420	410	240m6	M30/60	56	20	32	375	1065	645	420	253	250

Unit: mm

Standard Shaft Arrangement Configuration

RL	RR	RB	LR	LL	LB	BL	BR	BB
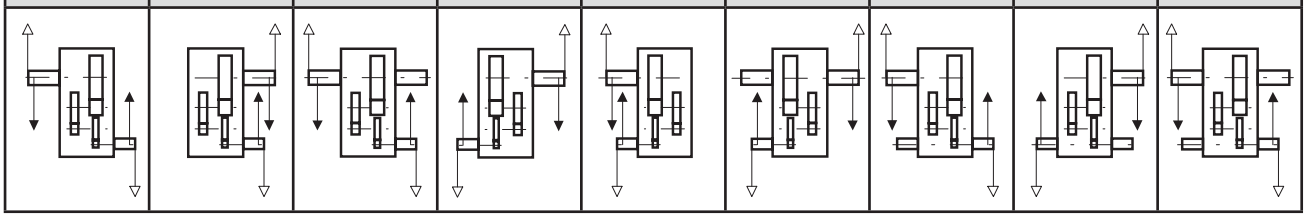								

Nomenclature

P H D [ ] P 3 - [ ] [ ] [ ] - [ ]

Size: 9090, 9095, 9100, 9105, 9110, 9115

Shaft Arrangement: RL, RR, RB, LR, LL, LB, BL, BR, BB

Low Speed Shaft Type: (blank) : Solid Shaft; T : Hollow Shaft (Shrink Disk type)

Fan: (blank) : Without Fan; F : With Fan

Nominal Reduction Ratio

Size	20	22.4	25	28	31.5	35.5	40	45	50	56	63	71	80	90
9090	○	○	○	○	○	○	○	○	○	○	○	○	○	
9095		○	○	○	○	○	○	○	○	○	○	○	○	○
9100	○	○	○	○	○	○	○	○	○	○	○	○	○	
9105		○	○	○	○	○	○	○	○	○	○	○	○	○
9110	○	○	○	○	○	○	○	○	○	○	○	○	○	
9115		○	○	○	○	○	○	○	○	○	○	○	○	○

Air Breather, Air Vent, Oil Fill, Drain Plug, Dip Stick, Oil Gauge, Inspection Cover, Oil Pump, Backstop (Option), Opposite Side

DIMENSIONS Parallel Shaft Triple Reduction Horizontal Mounting 9118 ▶ 9126

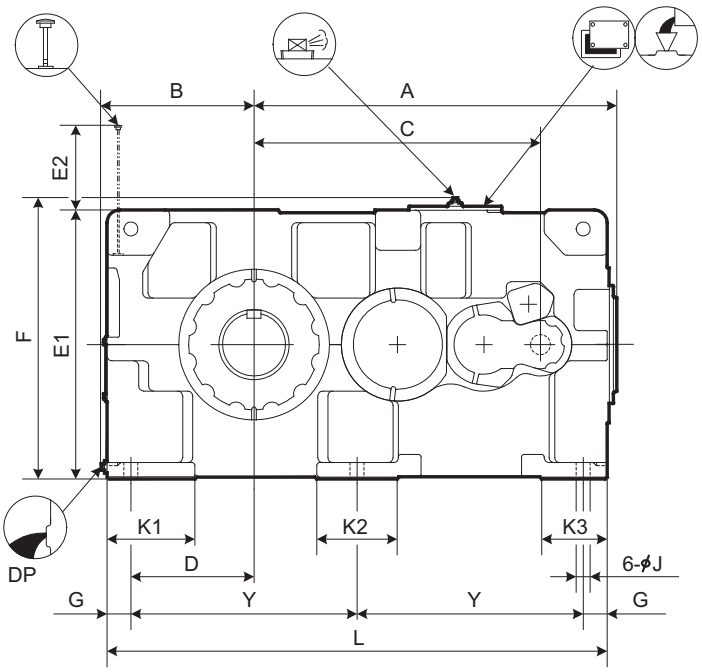

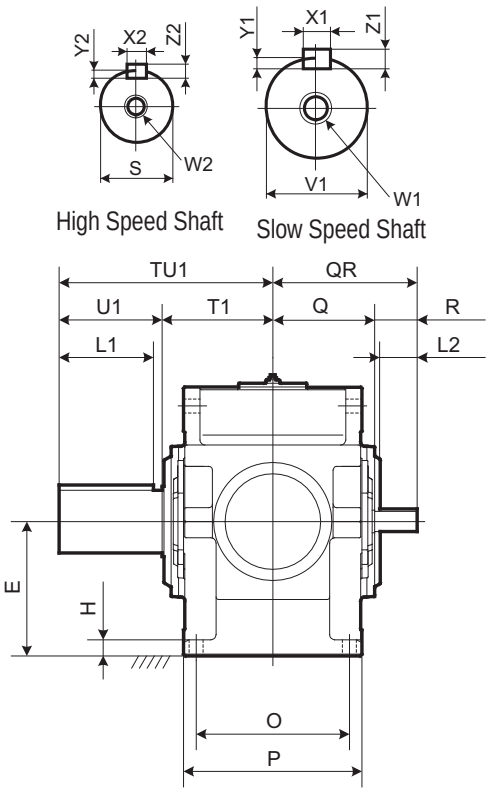

Size	A	B	C	D	E	E1	E2	F	G	H	J	K1	K2	K3	L	O	P	Y
9118	1434	608	1140	490	535	1070	338	1117	95	65	56	350	320	260	1990	610	710	900
9121	1585	663	1290	545	580	1160	347	1207	95	70	56	390	300	270	2180	680	780	995
9126	1585	663	1290	545	580	1160	347	1207	95	70	56	390	300	270	2180	680	780	995

Size	High Speed Shaft									DP	Wt. kg	Oil Qty. L
	Q	QR	R	S	W2/Depth	Key						
						X2	Y2	Z2	L2			
9118	405	575	170	80m6	M20/42	22	9	14	150	1 1/2"	5050	350
9121	440	650	210	100m6	M24/50	28	10	16	190	1 1/2"	6050	470
9126	440	650	210	100m6	M24/50	28	10	16	190	1 1/2"	6350	470

Size	Slow Speed Shaft (Solid)								
	TU1	T1	U1	V1	W1/Depth	Key			
						X1	Y1	Z1	L1
9118	850	440	410	260m6	M36/70	56	20	32	375
9121	935	465	470	280m6	M36/70	63	20	32	425
9126	935	465	470	300m6	M36/70	70	22	36	425

Unit: mm

1. Key and keyways are based on ISO R773-1969 Close keys (JIS B1301-1996 Parallel key in fastening type)
2. The oil quantity is approximate. Oil shall be supplied within the range shown on the oil gauge.
3. Consult us for dimensions not shown in these drawings.

DIMENSIONS Parallel Shaft Triple Reduction Horizontal Mounting 9118 ▶ 9126

Standard Shaft Arrangement Configuration

RL	RR	RB	LR	LL	LB	BL	BR	BB

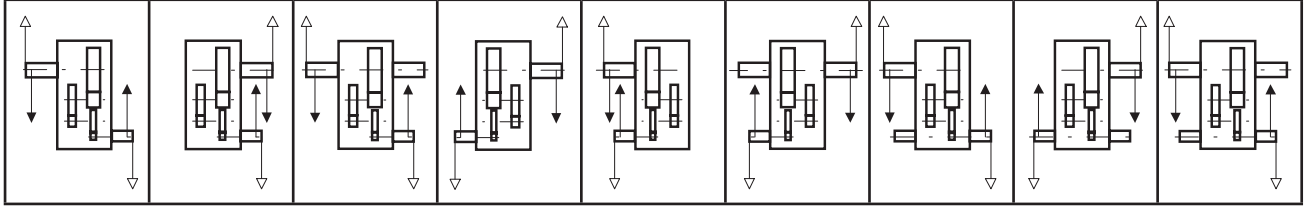

Nomenclature

P H D [ ] P 3 - [ ] [ ] - [ ]

Size: 9118, 9121, 9126

Shaft Arrangement: RL, RR, RB, LR, LL, LB, BL, BR, BB

Fan: (blank) : Without Fan; F : With Fan

Nominal Reduction Ratio:

Size	22.4	25	28	31.5	35.5	40	45	50	56	63	71	80	90
9118		○		○	○	○	○	○	○	○	○	○	○
9121			○	○	○	○	○	○	○	○	○	○	○
9126			○	○	○	○	○	○	○	○	○	○	○

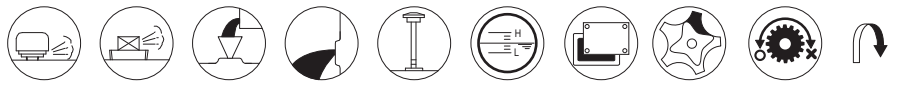

DIMENSIONS Parallel Shaft Triple Reduction Horizontal Mounting 9128 ▶ 9136

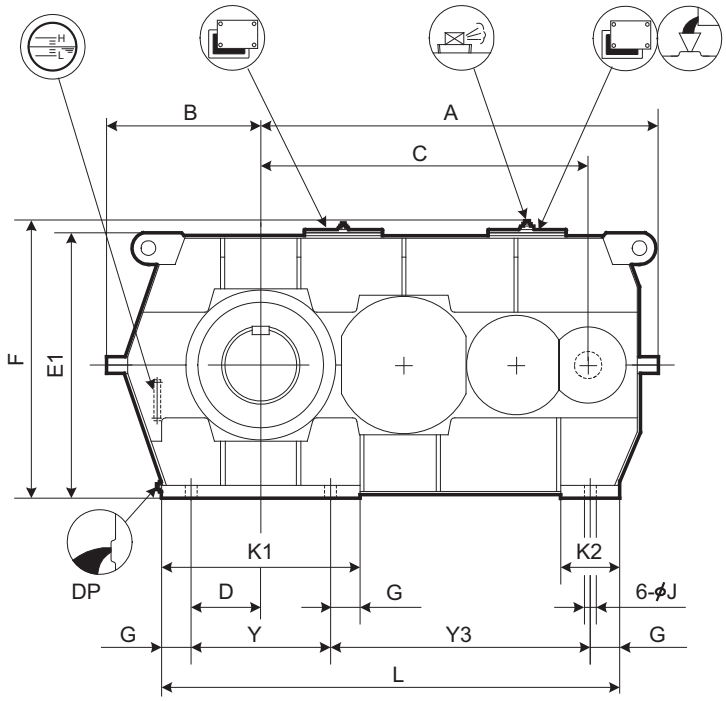

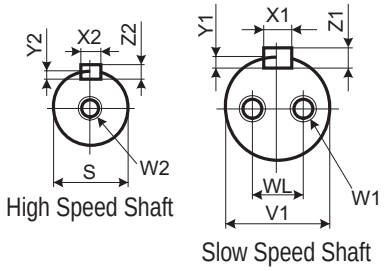

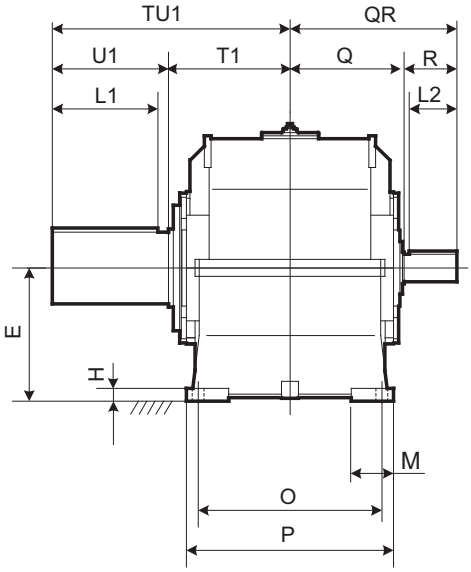

Note : Cast iron housing is available.
Consult us when the dimension is required.

Size	A	B	C	D	E	E1	F	G	H	J	K1	K2	L	M	O	P	Y	Y3
9128	1720	680	1413	330	600	1194	1241	140	55	66	940	280	1990	170	710	840	660	1050
9131	1882	730	1550	330	630	1256	1303	140	60	66	940	280	2170	200	850	980	660	1230
9136	1882	730	1550	330	630	1256	1303	140	60	66	940	280	2170	200	850	980	660	1230

Size	High Speed Shaft									DP	Wt. kg	Oil Qty. L
	Q	QR	R	S	W2/Depth	Key						
						X2	Y2	Z2	L2			
9128	470	680	210	100m6	M24/50	28	10	16	190	1 1/2"	7250	390
9131	540	790	250	130m6	M24/50	32	11	18	225	1 1/2"	9550	550
9136	540	790	250	130m6	M24/50	32	11	18	225	1 1/2"	9900	540

Size	Slow Speed Shaft (Solid)									
	TU1	T1	U1	V1	W1/Depth	WL	Key			
							X1	Y1	Z1	L1
9128	950	480	470	320m6	M36/70	200	70	22	36	425
9131	1100	550	550	340m6	M36/70	215	80	25	40	500
9136	1110	560	550	360m6	M36/70	230	80	25	40	500

Unit: mm

1. Key and keyways are based on ISO R773-1969 Close keys (JIS B1301-1996 Parallel key in fastening type)
2. The oil quantity is approximate. Oil shall be supplied within the range shown on the oil gauge.
3. Consult us for dimensions not shown in these drawings.

DIMENSIONS Parallel Shaft Triple Reduction Horizontal Mounting 9128 ▶ 9136

Standard Shaft Arrangement Configuration

RL	RR	RB	LR	LL	LB	BL	BR	BB
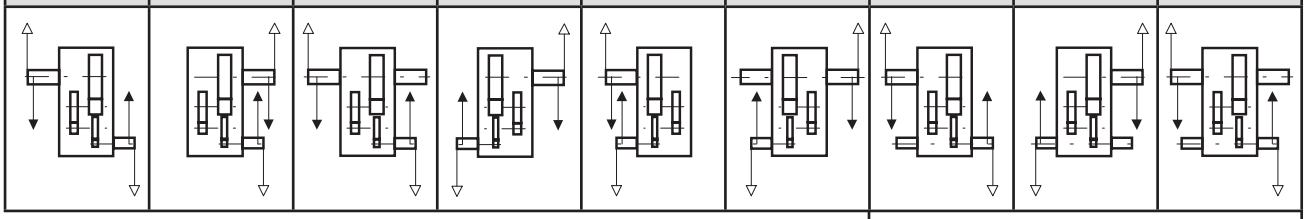								

Consult us each time for delivery date of reducer type BL, BR, and BB (with double extended shaft) for size 9131 and 9136.

Nomenclature

P H D [ ] P 3 A - [ ] [ ] - [ ]

Size: 9128, 9131, 9136

Shaft Arrangement: RL, RR, RB, LR, LL, LB, BL, BR, BB

Fan: (blank) : Without Fan; F : With Fan

Nominal Reduction Ratio:

Size	Nominal Reduction Ratio												
	22.4	25	28	31.5	35.5	40	45	50	56	63	71	80	90
9128			○	○	○	○	○	○	○	○	○	○	○
9131	○	○	○	○	○	○	○	○	○	○	○		
9136	○	○	○	○	○	○	○	○	○	○	○		

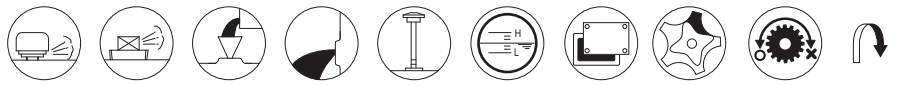

DIMENSIONS Parallel Shaft Quadruple Reduction Horizontal Mounting 9030 ▶ 9055

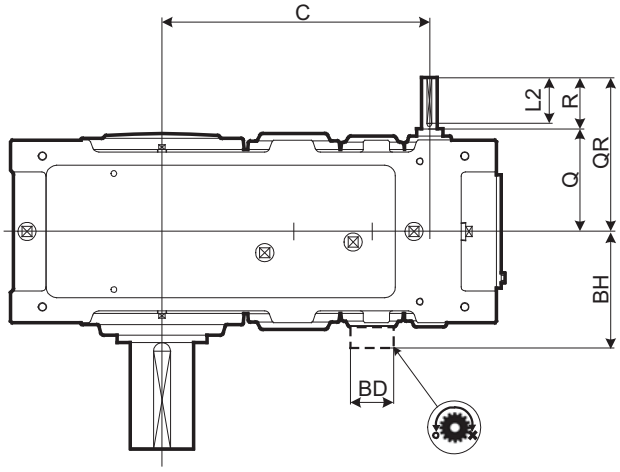

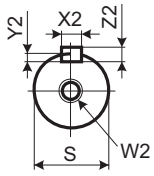

High Speed Shaft

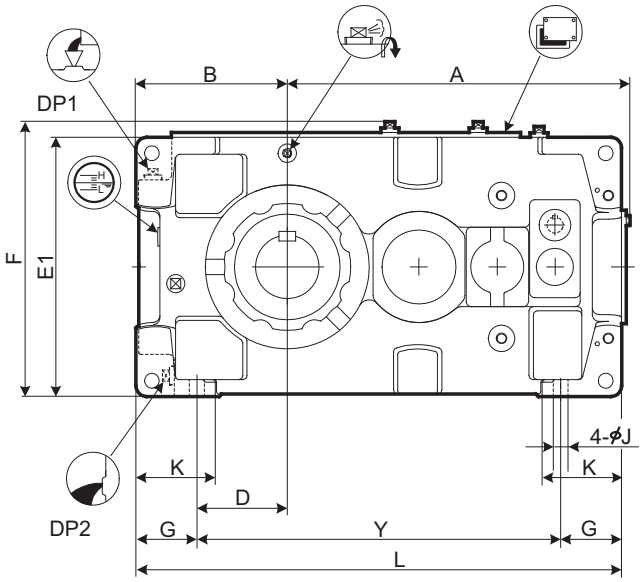

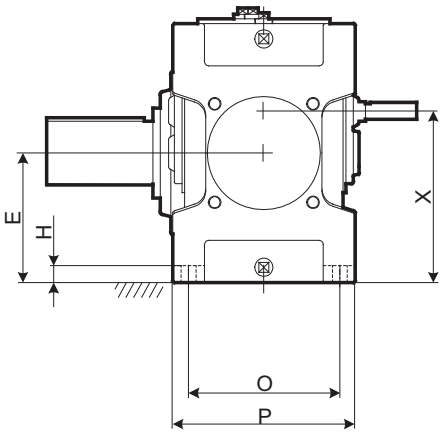

Size	A	B	C	D	E	E1	F	G	H	J	K	L	O	P	X	Y
9030	453	200	343	110	160	320	349	90	28	24	120	640	215	265	223	460
9035	484	219	374	129	185	370	399	90	28	24	120	690	215	265	248	510
9040	540	235	398	120	200	400	431	115	30	28	150	759	255	315	279	529
9045	577	256	437	141	220	440	471	115	30	28	150	819	255	315	299	589
9050	609	255	467	138.5	210	420	451	116.5	32	28	150	848	285	345	289	615
9055	648	286	506	171	245	490	521	115	32	28	150	918	285	345	324	688

Size	High Speed Shaft									Backstop		DP1	DP2	Wt. kg	Oil Qty. L
	Q	QR	R	S	W2/Depth	Key X2	Key Y2	Key Z2	Key L2	BD	BH				
9030	159	219	60	25k6	M10/22	8	4	7	50			3/4"	3/4"	210	14
9035	159	219	60	25k6	M10/22	8	4	7	50			3/4"	3/4"	230	17
9040	175	235	60	28k6	M10/22	8	4	7	50			1"	1"	310	25
9045	175	235	60	28k6	M10/22	8	4	7	50			1"	1"	380	28
9050	195	275	80	30k6	M10/22	8	4	7	70	150	263	1"	1"	450	32
9055	195	275	80	30k6	M10/22	8	4	7	70	150	263	1"	1"	510	40

Unit: mm

1. Key and keyways are based on ISO R773-1969 Close keys (JIS B1301-1996 Parallel key in fastening type)
2. The oil quantity is approximate. Oil shall be supplied within the range shown on the oil gauge.
3. Refer to the page C -13 for dimensions not shown in these drawings.
4. Refer to the page C -24 for the dimension of optional parts.

DIMENSIONS Parallel Shaft Quadruple Reduction Horizontal Mounting 9030 ▶ 9055

Slow Speed Shaft

Solid Shaft	Hollow Shaft (Shrink Disk Type)	Hollow Shaft (Key Type)
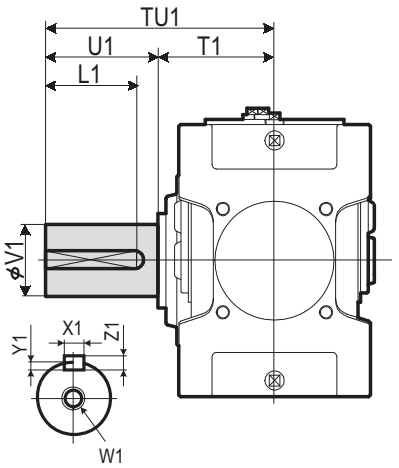	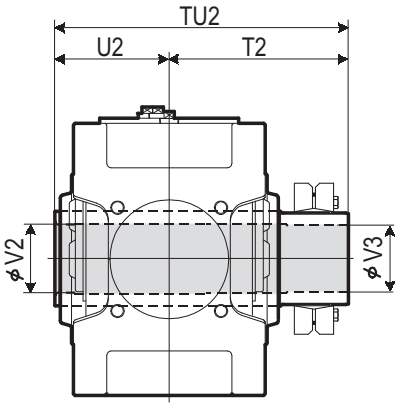 Refer to the page C -18 for details.	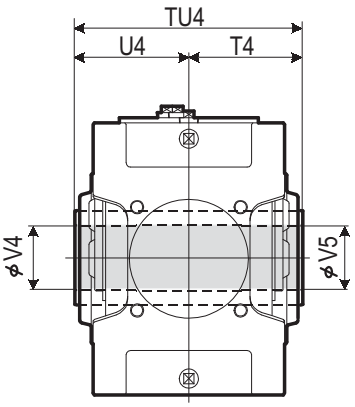 Refer to the page C -18 for details.

Size	Solid Shaft									Hollow Shaft (Shrink Disk Type)					Hollow Shaft (Key Type)				
	TU1	T1	U1	V1	W1/Depth	Key X1	Key Y1	Key Z1	Key L1	TU2	T2	U2	V2	V3	TU4	T4	U4	V4	V5
9030	330	160	170	80m6	M20/42	22	9	14	150	393	233	160	83	80	330	165	165	75	75
9035	330	160	170	90m6	M20/42	25	9	14	150	403	243	160	88	85	330	165	165	85	85
9040	349	179	170	95m6	M24/50	25	9	14	150	448	268	180	98	95	360	180	180	90	90
9045	391	181	210	105m6	M24/50	28	10	16	190	463	283	180	108	105	370	185	185	105	105
9050	411	201	210	110m6	M24/50	28	10	16	190	503	303	200	108	105	410	205	205	105	105
9055	411	201	210	120m6	M24/50	32	11	18	185	528	323	205	123	120	410	205	205	115	115

Unit: mm

Standard Shaft Arrangement Configuration

RL	RR	RB	LR	LL	LB	BL	BR	BB
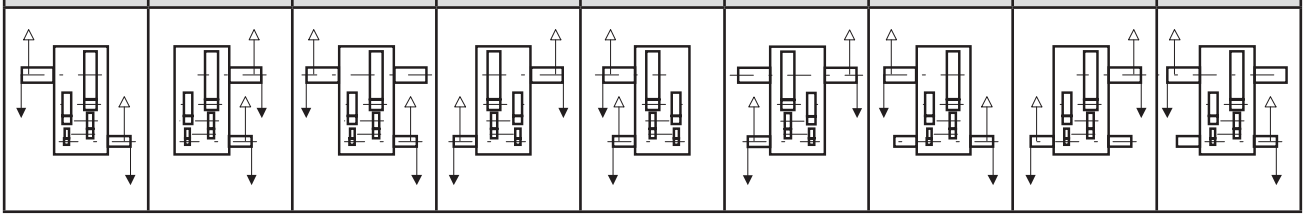								

Nomenclature

P H A [ ] P 4 - [ ] [ ] [ ] - [ ]

Size: 9030, 9035, 9040, 9045, 9050, 9055

Shaft Arrangement: RL, RR, RB, LR, LL, LB, BL, BR, BB

Low Speed Shaft Type:
- (blank): Solid Shaft
- T : Hollow Shaft (Shrink Disk type)
- K : Hollow Shaft (Key type)

Option:
- (blank) : Without Option
- B : With Backstop

Nominal Reduction Ratio

Size	80	90	100	112	125	140	160	180	200	224	250	280	315	355	400	450	500
9030	○	○	○	○	○	○	○	○	○	○							
9035			○	○	○	○	○	○	○	○	○	○					
9040	○	○	○	○	○	○	○	○	○	○							
9045	○	○	○	○	○	○	○	○	○	○	○	○					
9050	○	○	○	○	○	○	○	○	○	○	○	○	○	○	○		
9055			○	○	○	○	○	○	○	○	○	○	○	○	○	○	○

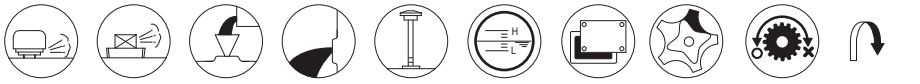

Air Breather, Air Vent, Oil Fill, Drain Plug, Dip Stick, Oil Gauge, Inspection Cover, Oil Pump, Backstop (Option), Opposite Side

DIMENSIONS Parallel Shaft Quadruple Reduction Horizontal Mounting 9060 ▶ 9085

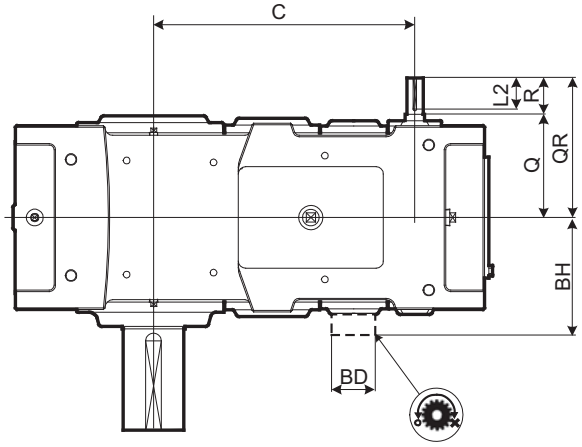

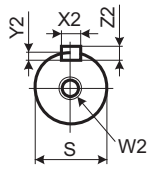

High Speed Shaft

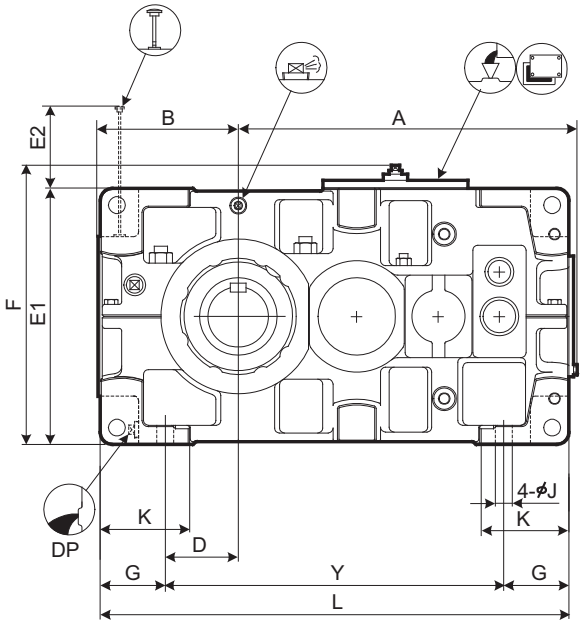

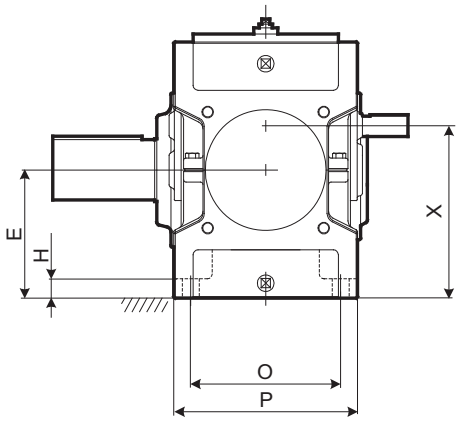

Size	A	B	C	D	E	E1	E2	F	G	H	J	K	L	O	P	X	Y
9060	701	299	540	151	265	530	126	578	135	35	35	180	970	310	380	357	700
9065	747	338	586	190	300	600	91	648	135	35	35	180	1055	310	380	392	785
9070	809	336	630	163	300	600	144	648	160	40	42	215	1115	350	430	409	795
9075	862	383	683	210	335	670	109	718	160	52	42	220	1215	350	430	444	895
9080	932	378	725	205	335	670	167	718	160	52	42	220	1275	380	460	461	955
9085	988	422	781	249	375	750	127	798	160	52	42	220	1375	380	460	501	1055

Size	High Speed Shaft									Backstop		DP	Wt. kg	Oil Qty. L
	Q	QR	R	S	W2/Depth	Key				BD	BH			
						X2	Y2	Z2	L2					
9060	221	301	80	35k6	M12/28	10	5	8	70	175	308	1"	660	37
9065	221	301	80	35k6	M12/28	10	5	8	70	175	308	1"	815	42
9070	244	354	110	40k6	M16/36	12	5	8	95	190	330	1"	950	56
9075	244	354	110	40k6	M16/36	12	5	8	95	190	330	1"	1170	67
9080	264	374	110	45k6	M16/36	14	5.5	9	95	210	365	1"	1360	73
9085	264	374	110	45k6	M16/36	14	5.5	9	95	210	365	1"	1620	90

Unit: mm

1. Key and keyways are based on ISO R773-1969 Close keys (JIS B1301-1996 Parallel key in fastening type)
2. The oil quantity is approximate. Oil shall be supplied within the range shown on the oil gauge.
3. Refer to the page C -15 for dimensions not shown in these drawings.
4. Refer to the page C -27 for the dimension of optional parts.

DIMENSIONS Parallel Shaft Quadruple Reduction Horizontal Mounting 9060 ▶ 9085

Slow Speed Shaft

Solid Shaft	Hollow Shaft (Shrink Disk Type)	Hollow Shaft (Key Type)
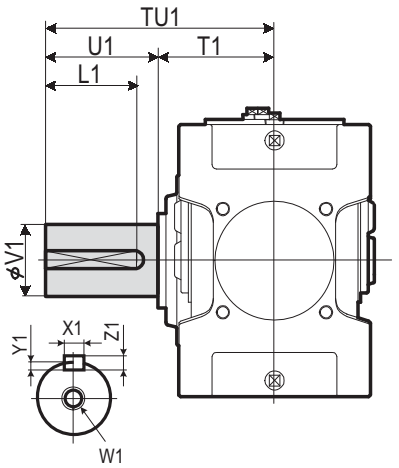	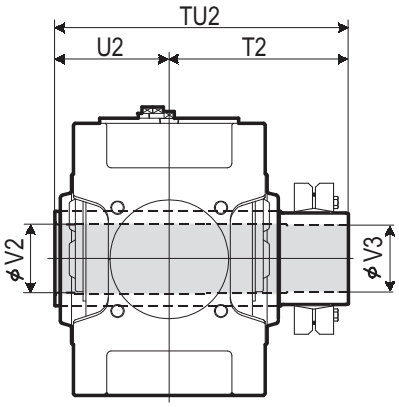 Refer to the page C -18 for details.	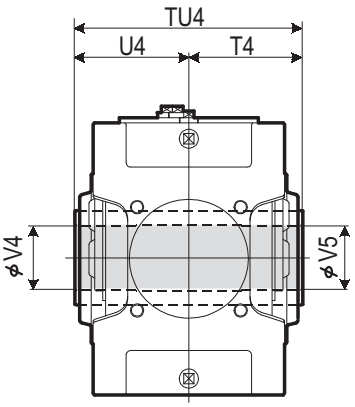 Refer to the page C -18 for details.

Size	Solid Shaft									Hollow Shaft (Shrink Disk Type)					Hollow Shaft (Key Type)				
	TU1	T1	U1	V1	W1/Depth	Key X1	Key Y1	Key Z1	Key L1	TU2	T2	U2	V2	V3	TU4	T4	U4	V4	V5
9060	440	230	210	125m6	M24/50	32	11	18	185	583	353	230	128	125	470	235	235	125	123
9065	484	234	250	140m6	M30/60	36	12	20	225	594	359	235	143	140	480	240	240	145	143
9070	509	259	250	145m6	M30/60	36	12	20	225	644	384	260	148	145	530	265	265	145	143
9075	562	262	300	160m6	M30/60	40	13	22	275	651	386	265	158	155	530	265	265	150	148
9080	582	282	300	165m6	M30/60	40	13	22	275	714	429	285	173	170	570	285	285	165	163
9085	585	285	300	175m6	M30/60	45	15	25	270	714	429	285	183	180	570	285	285	175	173

Unit: mm

Standard Shaft Arrangement Configuration

RL	RR	RB	LR	LL	LB	BL	BR	BB
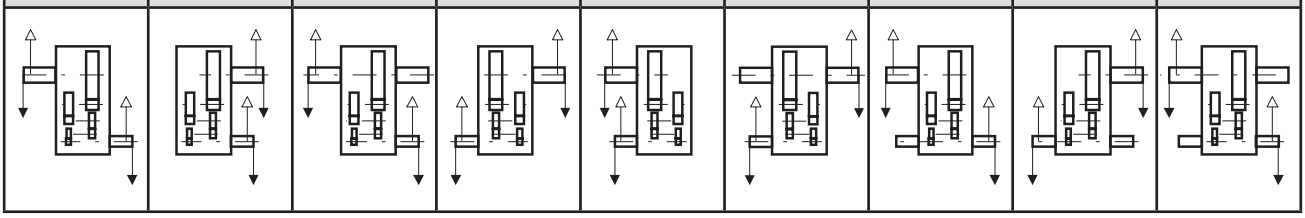								

Nomenclature

P H D [ ] P 4 - [ ] [ ] [ ] - [ ]

Size: 9060, 9065, 9070, 9075, 9080, 9085

Shaft Arrangement: RL, RR, RB, LR, LL, LB, BL, BR, BB

Low Speed Shaft Type:
- (blank) : Solid Shaft
- T : Hollow Shaft (Shrink Disk type)
- K : Hollow Shaft (Key type)

Option:
- (blank) : Without Option
- B : With Backstop

Nominal Reduction Ratio

Size	80	90	100	112	125	140	160	180	200	224	250	280	315	355	400	450	500
9060	○	○	○	○	○	○	○	○	○	○	○	○	○	○	○		
9065				○	○	○	○	○	○	○	○	○	○	○	○	○	○
9070	○	○	○	○	○	○	○	○	○	○	○	○	○	○	○		
9075			○	○	○	○	○	○	○	○	○	○	○	○	○	○	○
9080	○	○	○	○	○	○	○	○	○	○	○	○	○	○	○		
9085			○	○	○	○	○	○	○	○	○	○	○	○	○	○	○

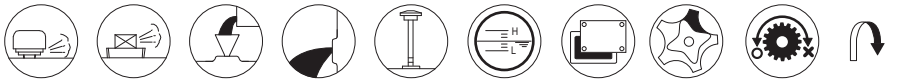

Air Breather, Air Vent, Oil Fill, Drain Plug, Dip Stick, Oil Gauge, Inspection Cover, Oil Pump, Backstop (Option), Opposite Side

DIMENSIONS Parallel Shaft Quadruple Reduction Horizontal Mounting 9090 ▶ 9115

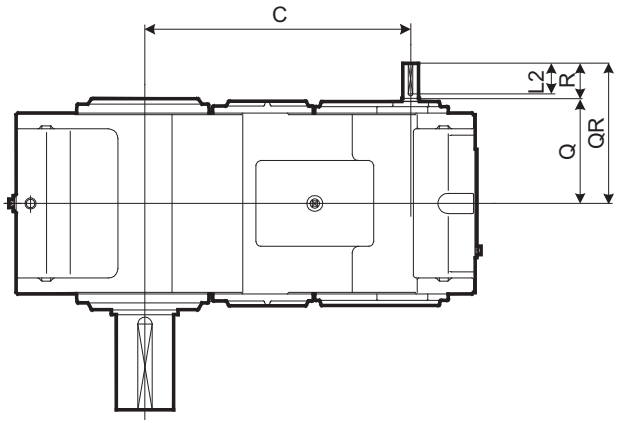

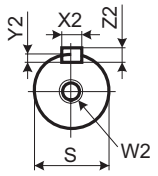

High Speed Shaft

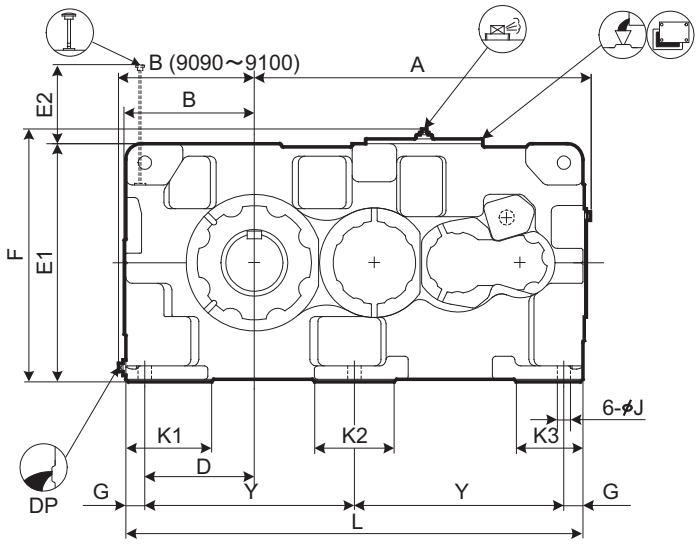

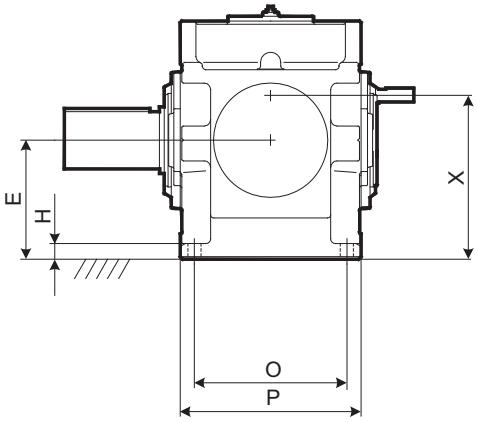

Size	A	B	C	D	E	E1	E2	F	G	H	J	K1	K2	K3	L	O	P	X	Y
9090	1060	428	795	345	375	750	194	797	60	50	42	270	250	210	1440	480	570	517	660
9095	1090	458	825	375	400	800	199	847	60	50	42	290	250	210	1500	480	570	542	690
9100	1194	468	901	375	425	850	208	897	70	55	48	300	280	240	1610	560	650	587	735
9105	1228	493	935	410	450	900	213	947	70	55	48	320	280	240	1680	560	650	612	770
9110	1344	508	1001	420	475	950	218	997	75	60	56	340	310	260	1810	610	710	637	830
9115	1393	558	1050	470	500	1000	217	1047	75	60	56	350	310	260	1910	610	710	662	880

Size	High Speed Shaft									DP	Wt. kg	Oil Qty. L
	Q	QR	R	S	W2/Depth	Key						
						X2	Y2	Z2	L2			
9090	330	440	110	50k6	M16/36	14	5.5	9	95	1 1/2"	2150	150
9095	330	440	110	50k6	M16/36	14	5.5	9	95	1 1/2"	2400	180
9100	375	515	140	60m6	M20/42	18	7	11	125	1 1/2"	2830	220
9105	375	515	140	60m6	M20/42	18	7	11	125	1 1/2"	3390	260
9110	405	545	140	60m6	M20/42	18	7	11	125	1 1/2"	4060	300
9115	405	545	140	60m6	M20/42	18	7	11	125	1 1/2"	4510	365

Unit: mm

1. Key and keyways are based on ISO R773-1969 Close keys (JIS B1301-1996 Parallel key in fastening type)
2. The oil quantity is approximate. Oil shall be supplied within the range shown on the oil gauge.
3. Refer to the page C-16 for dimensions not shown in these drawings.
4. Refer to the page C-30 for the dimension of optional parts.

DIMENSIONS Parallel Shaft Quadruple Reduction Horizontal Mounting 9090 ▶ 9115

Slow Speed Shaft

Solid Shaft	Hollow Shaft (Shrink Disk Type)
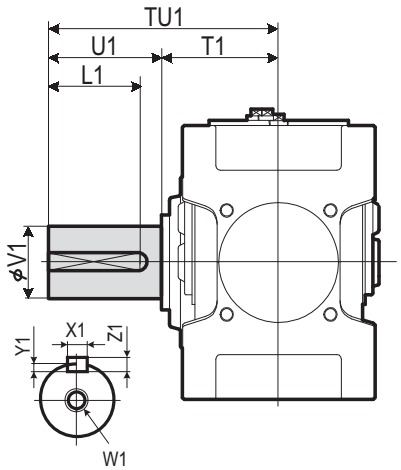	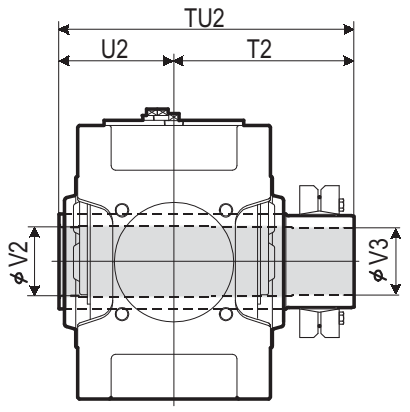 Refer to the page C -18 for details.

Size	Solid Shaft									Hollow Shaft (Shrink Disk Type)				
	TU1	T1	U1	V1	W1/Depth	Key X1	Key Y1	Key Z1	Key L1	TU2	T2	U2	V2	V3
9090	650	350	300	180m6	M30/60	45	15	25	270	844	494	350	193	190
9095	700	350	350	190m6	M30/60	45	15	25	320	859	509	350	203	200
9100	740	390	350	200m6	M30/60	45	15	25	320	934	544	390	213	210
9105	740	390	350	220m6	M30/60	50	17	28	320	949	559	390	223	220
9110	770	420	350	220m6	M30/60	50	17	28	320	1030	610	420	243	240
9115	830	420	410	240m6	M30/60	56	20	32	375	1065	645	420	253	250

Unit: mm

Standard Shaft Arrangement Configuration

RL	RR	RB	LR	LL	LB	BL	BR	BB
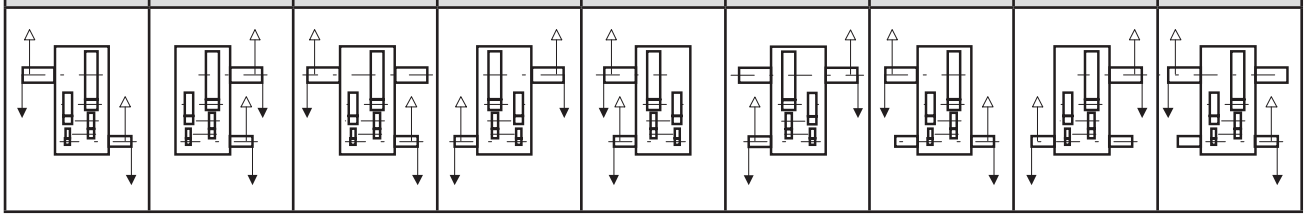								

Nomenclature

P H D [ ] P 4 - [ ] [ ] - [ ]

Size: 9090, 9095, 9100, 9105, 9110, 9115

Shaft Arrangement: RL, RR, RB, LR, LL, LB, BL, BR, BB

Low Speed Shaft Type: (blank): Solid Shaft; T : Hollow Shaft (Shrink Disk type)

Nominal Reduction Ratio

Size	90	100	112	125	140	160	180	200	224	250	280	315	355	400	450	500
9090	○	○	○	○	○	○	○	○	○	○	○	○	○	○	○	
9095		○	○	○	○	○	○	○	○	○	○	○	○	○	○	○
9100	○	○	○	○	○	○	○	○	○	○	○	○	○	○	○	
9105		○	○	○	○	○	○	○	○	○	○	○	○	○	○	○
9110	○	○	○	○	○	○	○	○	○	○	○	○	○	○	○	
9115		○	○	○	○	○	○	○	○	○	○	○	○	○	○	○

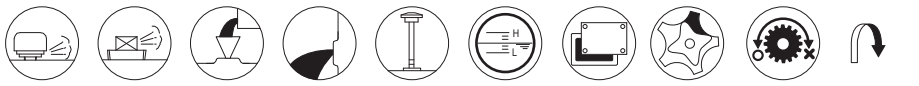

Air Breather, Air Vent, Oil Fill, Drain Plug, Dip Stick, Oil Gauge, Inspection Cover, Oil Pump, Backstop (Option), Opposite Side

DIMENSIONS Parallel Shaft Quadruple Reduction Horizontal Mounting 9118 ▶ 9126

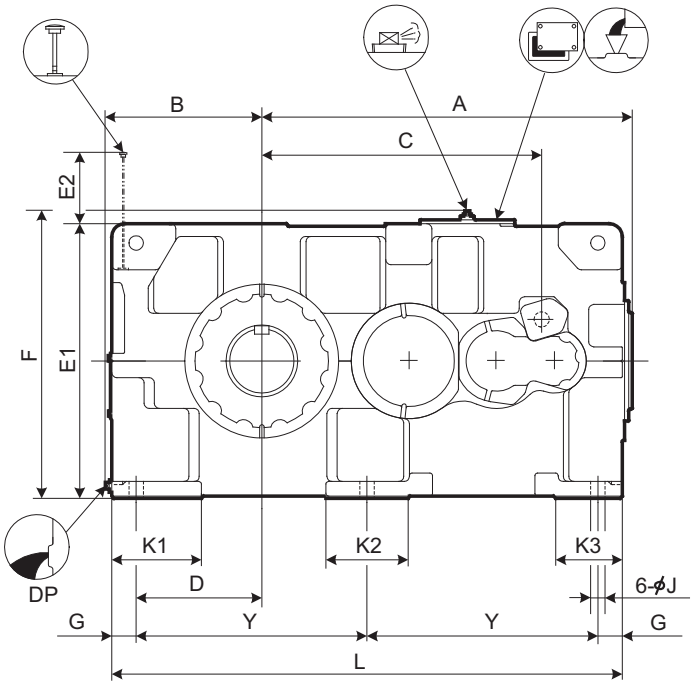

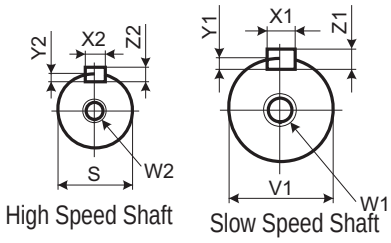

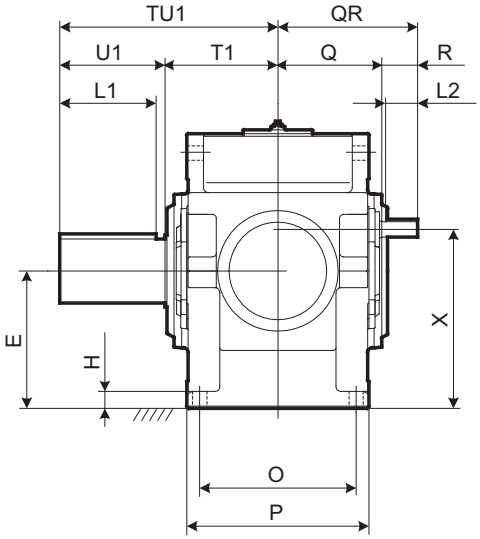

Speed Reducer

Selection Tables

Dimension Tables

Size	A	B	C	D	E	E1	E2	F	G	H	J	K1	K2	K3	L	O	P	X	Y
9118	1434	608	1091	490	535	1070	278	1117	95	65	56	350	320	260	1990	610	710	697	900
9121	1585	663	1290	545	580	1160	277	1207	95	70	56	390	300	270	2180	680	780	777	995
9126	1585	663	1290	545	580	1160	277	1207	95	70	56	390	300	270	2180	680	780	777	995

Size	High Speed Shaft									DP	Wt. kg	Oil Qty. L
	Q	QR	R	S	W2/Depth	Key						
						X2	Y2	Z2	L2			
9118	405	545	140	60m6	M20/42	18	7	11	125	1 1/2"	5050	390
9121	440	580	140	65m6	M20/42	18	7	11	125	1 1/2"	6100	530
9126	440	580	140	65m6	M20/42	18	7	11	125	1 1/2"	6350	520

Size	Slow Speed Shaft (Solid)								
	TU1	T1	U1	V1	W1/Depth	Key			
						X1	Y1	Z1	L1
9118	850	440	410	260m6	M36/70	56	20	32	375
9121	935	465	470	280m6	M36/70	63	20	32	425
9126	935	465	470	300m6	M36/70	70	22	36	425

Unit: mm

1. Key and keyways are based on ISO R773-1969 Close keys (JIS B1301-1996 Parallel key in fastening type)
2. The oil quantity is approximate. Oil shall be supplied within the range shown on the oil gauge.
3. Consult us for dimensions not shown in these drawings.

Standard Shaft Arrangement Configuration

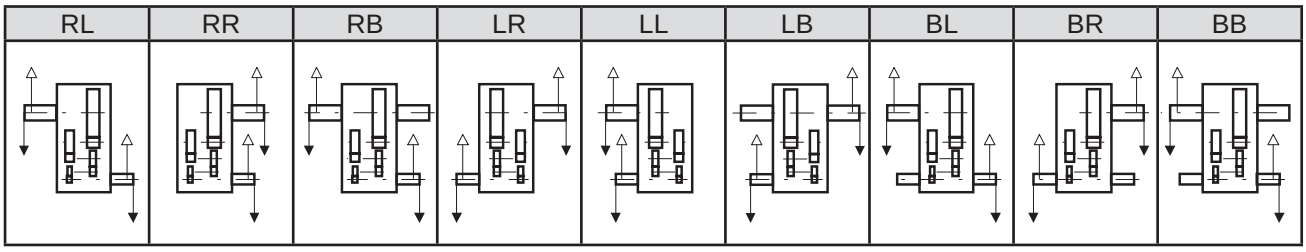

Nomenclature

P H D [ ] P 4 - [ ] - [ ]

Size: 9118, 9121, 9126

Shaft Arrangement: RL, RR, RB, LR, LL, LB, BL, BR, BB

Nominal Reduction Ratio

Size	100	112	125	140	160	180	200	224	250	280	315	355	400	450
9118	○	○	○	○	○	○	○	○	○	○	○	○	○	○
9121	○	○	○	○	○	○	○	○	○	○	○	○	○	
9126	○	○	○	○	○	○	○	○	○	○	○	○	○	

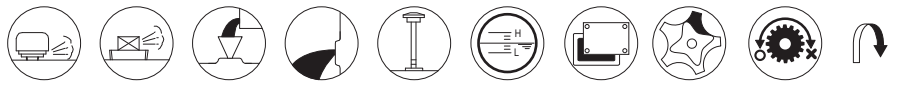

DIMENSIONS Parallel Shaft Quadruple Reduction Horizontal Mounting 9128 ▶ 9136

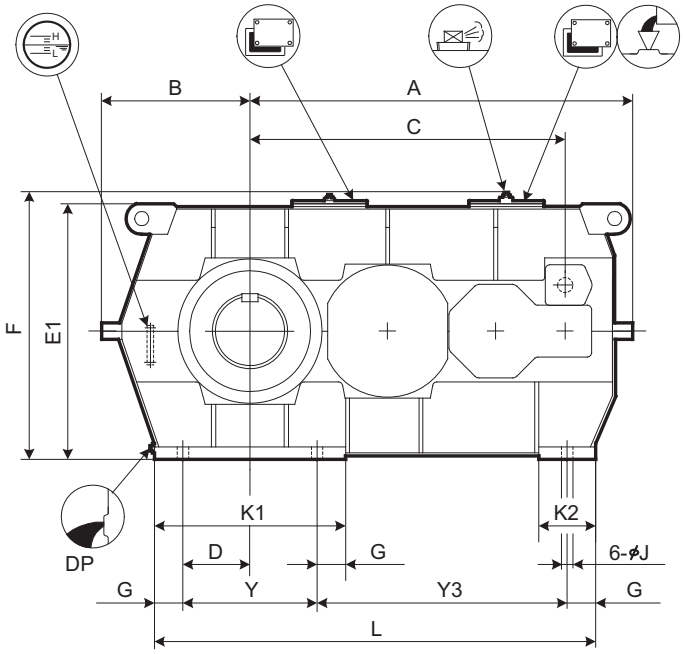

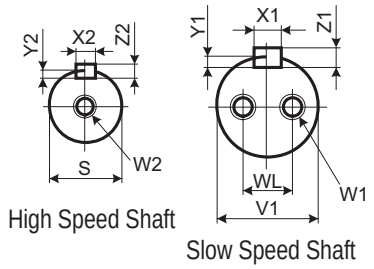

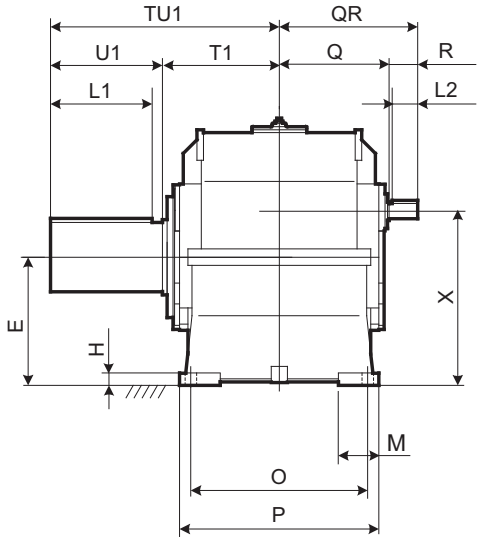

Note : Cast iron housing is available.
Consult us when the dimension is required.

Size	A	B	C	D	E	E1	F	G	H	J	K1	K2	L	M	O	P	X	Y	Y3
9128	1720	680	1413	330	600	1194	1241	140	55	66	940	280	1990	170	710	840	826	660	1050
9131	1882	730	1550	330	630	1256	1303	140	60	66	940	280	2170	200	850	980	856	660	1230
9136	1882	730	1550	330	630	1256	1303	140	60	66	940	280	2170	200	850	980	856	660	1230

Size	High Speed Shaft									DP	Wt. kg	Oil Qty. L
	Q	QR	R	S	W2/Depth	Key						
						X2	Y2	Z2	L2			
9128	465	605	140	75m6	M20/42	20	7.5	12	125	1 1/2"	7400	450
9131	540	680	140	75m6	M20/42	20	7.5	12	125	1 1/2"	9600	650
9136	540	680	140	75m6	M20/42	20	7.5	12	125	1 1/2"	10000	640

Size	Slow Speed Shaft (Solid)									
	TU1	T1	U1	V1	W1/Depth	WL	Key			
							X1	Y1	Z1	L1
9128	950	480	470	320m6	M36/70	200	70	22	36	425
9131	1100	550	550	340m6	M36/70	215	80	25	40	500
9136	1110	560	550	360m6	M36/70	230	80	25	40	500

Unit: mm

1. Key and keyways are based on ISO R773-1969 Close keys (JIS B1301-1996 Parallel key in fastening type)
2. The oil quantity is approximate. Oil shall be supplied within the range shown on the oil gauge.
3. Consult us for dimensions not shown in these drawings.

DIMENSIONS Parallel Shaft Quadruple Reduction Horizontal Mounting 9128 ▶ 9136

Standard Shaft Arrangement Configuration

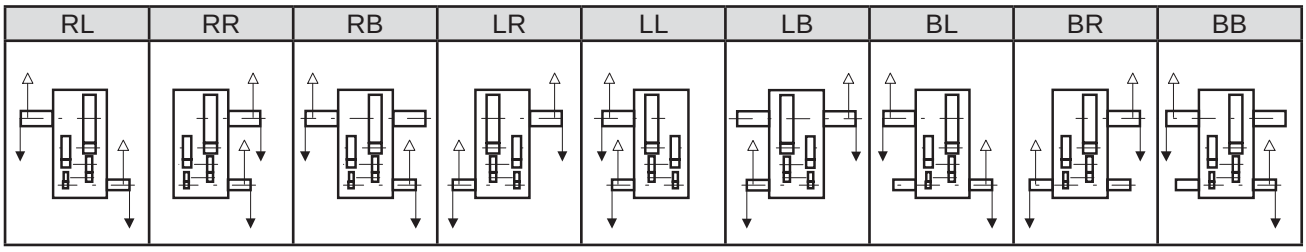

Nomenclature

P H D [ ] P 4 A - [ ] - [ ]

Size: 9128, 9131, 9136

Shaft Arrangement: RL, RR, RB, LR, LL, LB, BL, BR, BB

Nominal Reduction Ratio:

Size	80	90	100	112	125	140	160	180	200	224	250	280	315	355	400
9128			○	○	○	○	○	○	○	○	○	○	○	○	○
9131	○	○	○	○	○	○	○	○	○	○	○	○	○		
9136	○	○	○	○	○	○	○	○	○	○	○	○	○		

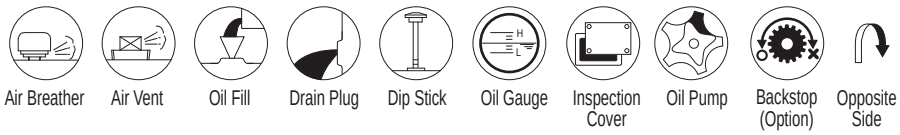

DIMENSIONS Parallel Shaft Double Reduction Vertical Mounting 9015 ▶ 9055

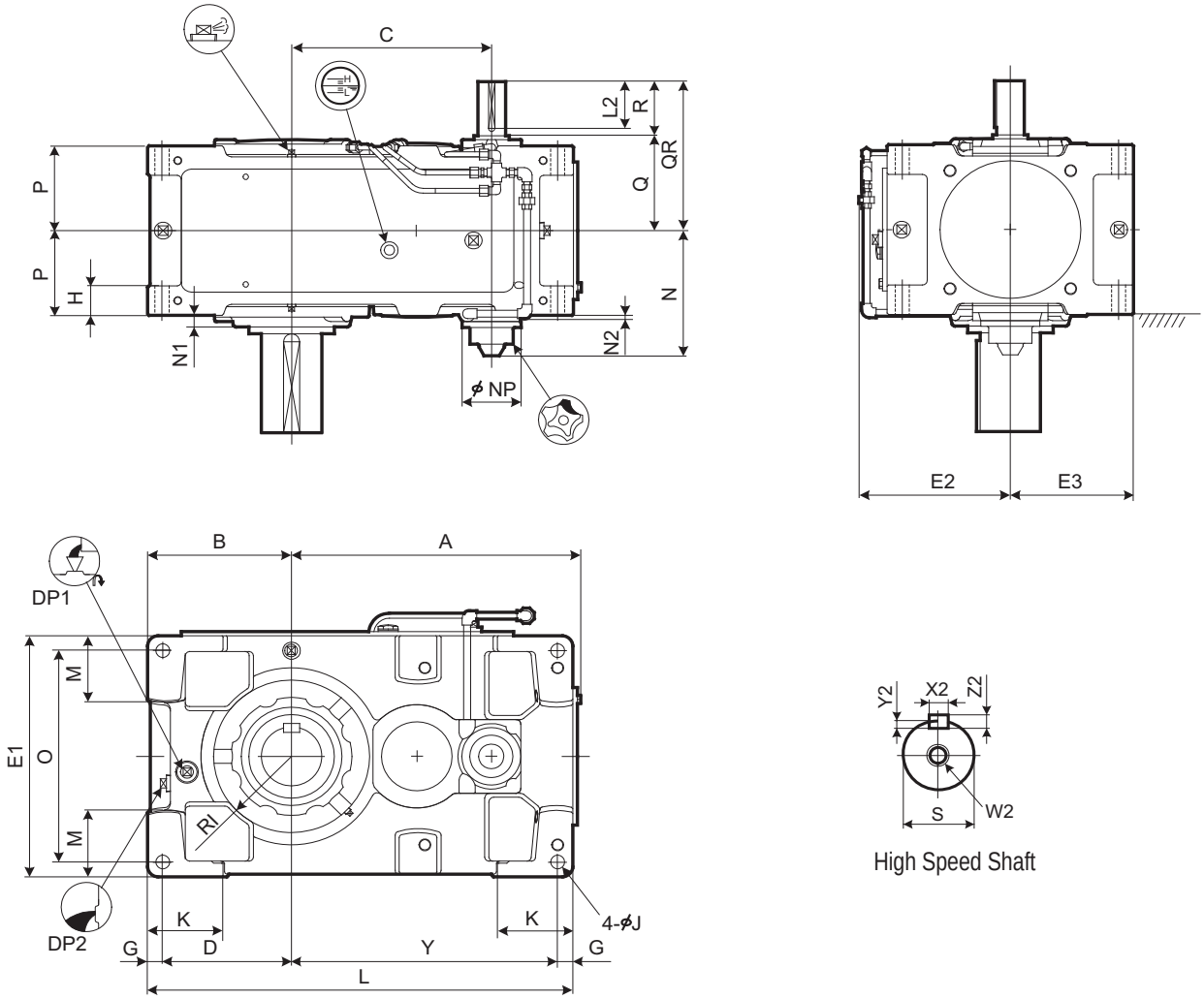

Size	A	B	C	D	E1	E2	E3	G	H	RI	J	K	L	M	N	N1	N2	NP	O	P	Y
9015	295	160	194	140	270	195	135	20	35	80	15	95	440	70	186	25	14	100	230	102.5	260
9025	346	175	227	155	310	215	155	20	40	87.5	19	110	505	75	198.5	23	12	100	270	117.5	310
9030	406	200	264	175	320	220	160	25	50	105	24	120	590	85	211	22	9	100	270	132.5	365
9035	437	219	295	194	370	245	185	25	50	120	24	120	640	100	211	22	9	100	320	132.5	396
9040	467	235	306	205	400	246	200	30	60	120	28	150	685	100	237.5	15	2	117	340	157.5	420
9045	506	256	345	226	440	266	220	30	60	140	28	150	745	120	237.5	17.5	2	117	380	157.5	459
9050	537	255	358	225	420	270	210	30	60	140	28	150	775	110	257.5	23	7	117	360	172.5	490
9055	576	286	397	256	490	305	245	30	60	155	28	150	845	135	257.5	23	7	117	430	172.5	529

Size	High Speed Shaft									DP1	DP2	Wt. kg	Oil Qty. L
	Q	QR	R	S	W2/Depth	Key							
						X2	Y2	Z2	L2				
9015	131	211	80	30k6	M10/22	8	4	7	70	3/4"	3/4"	100	5
9025	146	226	80	35k6	M12/28	10	5	8	70	3/4"	3/4"	140	7
9030	159	269	110	40k6	M16/36	12	5	8	95	3/4"	3/4"	195	9
9035	159	269	110	40k6	M16/36	12	5	8	95	3/4"	3/4"	215	12
9040	174	284	110	50k6	M16/36	14	5.5	9	95	1"	1"	285	18
9045	174	284	110	50k6	M16/36	14	5.5	9	95	1"	1"	345	22
9050	193	303	110	55m6	M20/42	16	6	10	95	1"	1"	415	22
9055	193	303	110	55m6	M20/42	16	6	10	95	1"	1"	472	31

Unit: mm

1. Key and keyways are based on ISO R773-1969 Close keys (JIS B1301-1996 Parallel key in fastening type)
2. The oil quantity is approximate. Oil shall be supplied within the range shown on the oil gauge.
3. Refer to the page C-12 for dimensions not shown in these drawings.
4. Refer to the page C-25 for the dimension of optional parts.

DIMENSIONS Parallel Shaft Double Reduction Vertical Mounting 9015 ▶ 9055

Slow Speed Shaft

Solid Shaft	Hollow Shaft (Shrink Disk Type)	Hollow Shaft (Key Type)
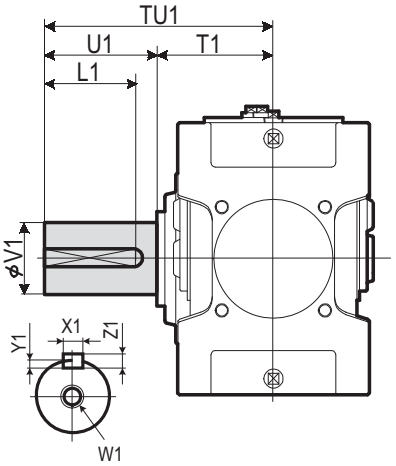	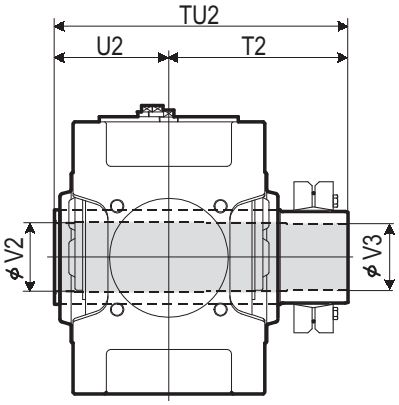 Refer to the page C-18 for details.	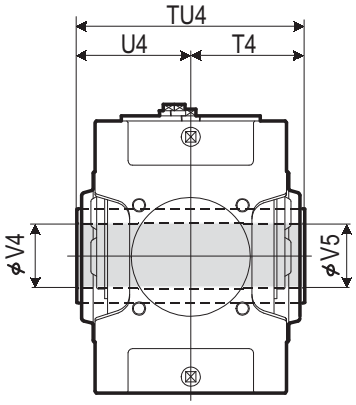 Refer to the page C-18 for details.

Size	Solid Shaft									Hollow Shaft (Shrink Disk Type)					Hollow Shaft (Key Type)				
	TU1	T1	U1	V1	W1/Depth	Key X1	Key Y1	Key Z1	Key L1	TU2	T2	U2	V2	V3	TU4	T4	U4	V4	V5
9015	245	135	110	58m6	M20/42	18	7	11	95	328	193	135	63	60	270	135	135	55	55
9025	285	145	140	70m6	M20/42	20	7.5	12	125	358	213	145	73	70	300	150	150	65	65
9030	330	160	170	80m6	M20/42	22	9	14	150	393	233	160	83	80	330	165	165	75	75
9035	330	160	170	90m6	M20/42	25	9	14	150	403	243	160	88	85	330	165	165	85	85
9040	349	179	170	95m6	M24/50	25	9	14	150	448	268	180	98	95	360	180	180	90	90
9045	391	181	210	105m6	M24/50	28	10	16	190	463	283	180	108	105	370	185	185	105	105
9050	411	201	210	110m6	M24/50	28	10	16	190	503	303	200	108	105	410	205	205	105	105
9055	411	201	210	120m6	M24/50	32	11	18	185	528	323	205	123	120	410	205	205	115	115

Unit: mm

Standard Arrangement Configuration

RL	RR
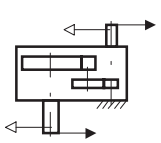	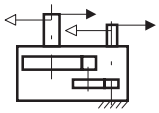

Nomenclature

P V A [ ] P 2 - [ ] [ ] - [ ]

Size: 9015, 9025, 9030, 9035, 9040, 9045, 9050, 9055

Shaft Arrangement: RL, RR

Low Speed Shaft Type:
- (blank) : Solid Shaft
- T : Hollow Shaft (Shrink Disk type)
- K : Hollow Shaft (Key type)

Nominal Reduction Ratio

Size	6.3	7.1	8	9	10	11.2	12.5	14	16	18	20	22.4
9015	○	○	○	○	○	○	○	○	○	○		
9025	○	○	○	○	○	○	○	○	○	○		
9030	○	○	○	○	○	○	○	○	○	○		
9035			○	○	○	○	○	○	○	○	○	○
9040	○	○	○	○	○	○	○	○	○	○		
9045			○	○	○	○	○	○	○	○	○	○
9050	○	○	○	○	○	○	○	○	○	○		
9055			○	○	○	○	○	○	○	○	○	○

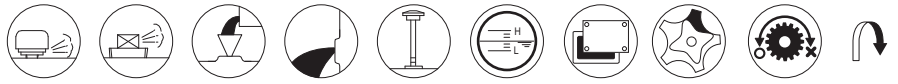

Air Breather, Air Vent, Oil Fill, Drain Plug, Dip Stick, Oil Gauge, Inspection Cover, Oil Pump, Backstop (Option), Opposite Side

DIMENSIONS Parallel Shaft Double Reduction Vertical Mounting 9060 ▶ 9085

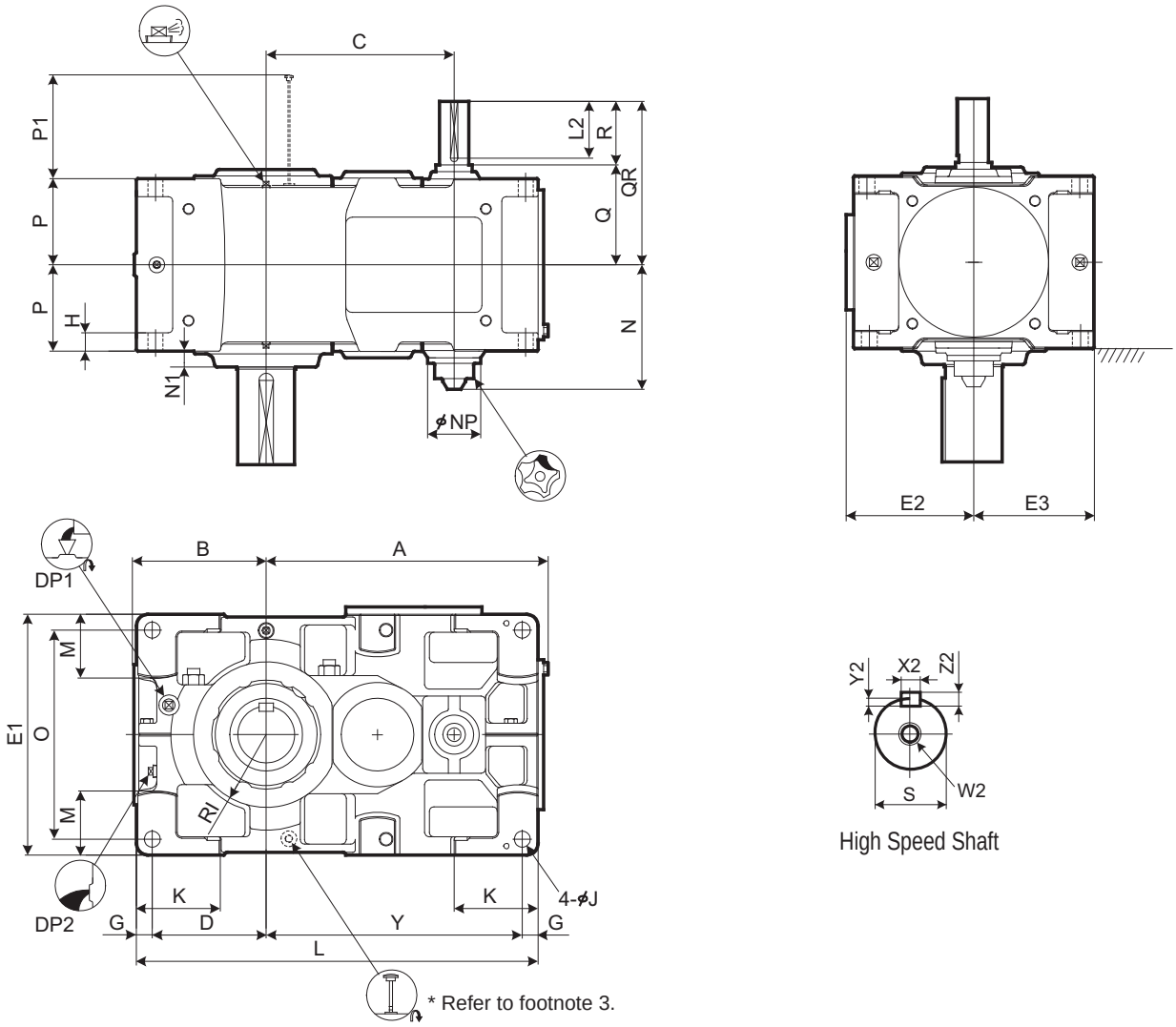

Size	A	B	C	D	E1	E2	E3	G	H	RI	J	K	L	M	N	N1	NP	O	P	P1	Y
9060	621	299	414	251	530	282	265	35	35	160	35	180	885	140	277.5	35	117	460	190	223	564
9065	667	338	460	290	600	317	300	35	35	175	35	180	970	175	277.5	38	117	530	190	223	610
9070	719	336	482	283	600	317	300	40	40	175	42	215	1020	155	302.5	38	117	520	215	253	657
9075	772	383	535	330	670	352	335	40	52	190	42	220	1120	195	302.5	40	117	590	215	253	710
9080	812	378	556	325	670	352	335	40	52	190	42	220	1155	170	322.5	45	117	590	230	283	750
9085	868	422	612	369	750	392	375	40	52	215	42	220	1255	210	322.5	40	117	670	230	283	806

Size	High Speed Shaft									DP1	DP2	Wt. kg	Oil Qty. L
	Q	QR	R	S	W2/Depth	Key							
						X2	Y2	Z2	L2				
9060	220	360	140	65m6	M20/42	18	7	11	125	1"	1"	610	25
9065	220	360	140	65m6	M20/42	18	7	11	125	1"	1"	735	32
9070	245	385	140	75m6	M20/42	20	7.5	12	125	1"	1"	860	39
9075	245	385	140	75m6	M20/42	20	7.5	12	125	1"	1"	1110	49
9080	264	434	170	85m6	M20/42	22	9	14	150	1"	1"	1240	54
9085	264	434	170	85m6	M20/42	22	9	14	150	1"	1"	1500	71

Unit: mm

1. Key and keyways are based on ISO R773-1969 Close keys (JIS B1301-1996 Parallel key in fastening type)
2. The oil quantity is approximate. Oil shall be supplied within the range shown on the oil gauge.
3. Shaft arrangement RR is equipped with visible gauge. Refer to page C-28.
4. Refer to the page C-14 for dimensions not shown in these drawings.
5. Refer to the page C-28 for the dimension of optional parts.

DIMENSIONS Parallel Shaft Double Reduction Vertical Mounting 9060 ▶ 9085

Slow Speed Shaft

Solid Shaft	Hollow Shaft (Shrink Disk Type)	Hollow Shaft (Key Type)
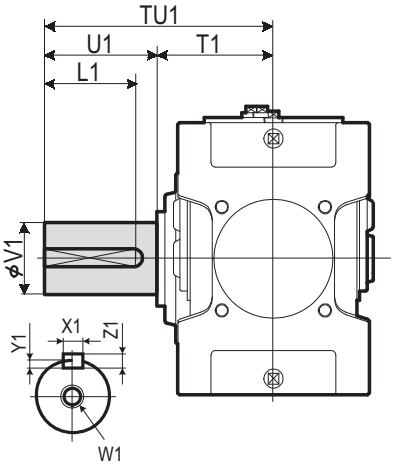	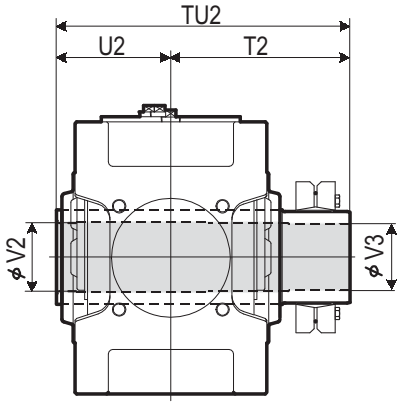 Refer to the page C-18 for details.	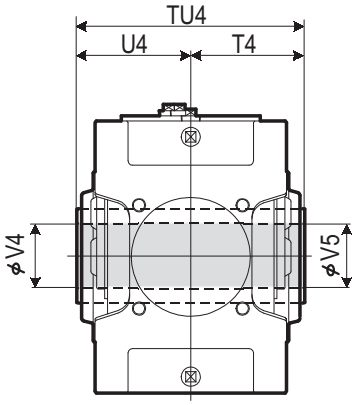 Refer to the page C-18 for details.

Size	Solid Shaft									Hollow Shaft (Shrink Disk Type)					Hollow Shaft (Key Type)				
	TU1	T1	U1	V1	W1/Depth	Key X1	Key Y1	Key Z1	Key L1	TU2	T2	U2	V2	V3	TU4	T4	U4	V4	V5
9060	440	230	210	125m6	M24/50	32	11	18	185	583	353	230	128	125	470	235	235	125	123
9065	484	234	250	140m6	M30/60	36	12	20	225	594	359	235	143	140	480	240	240	145	143
9070	509	259	250	145m6	M30/60	36	12	20	225	644	384	260	148	145	530	265	265	145	143
9075	562	262	300	160m6	M30/60	40	13	22	275	651	386	265	158	155	530	265	265	150	148
9080	582	282	300	165m6	M30/60	40	13	22	275	714	429	285	173	170	570	285	285	165	163
9085	585	285	300	175m6	M30/60	45	15	25	270	714	429	285	183	180	570	285	285	175	173

Unit: mm

Standard Arrangement Configuration

RL	RR
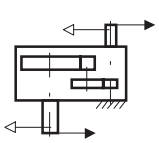	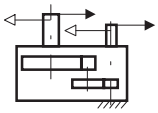

Nomenclature

P V D [ ] P 2 - [ ] [ ] - [ ]

Size: 9060, 9065, 9070, 9075, 9080, 9085

Shaft Arrangement: RL, RR

Low Speed Shaft Type:
(blank) : Solid Shaft
T : Hollow Shaft (Shrink Disk type)
K : Hollow Shaft (Key type)

Nominal Reduction Ratio

Size	6.3	7.1	8	9	10	11.2	12.5	14	16	18	20	22.4
9060	○	○	○	○	○	○	○	○	○	○		
9065			○	○	○	○	○	○	○	○	○	○
9070	○	○	○	○	○	○	○	○	○	○		
9075			○	○	○	○	○	○	○	○	○	○
9080	○	○	○	○	○	○	○	○	○	○		
9085			○	○	○	○	○	○	○	○	○	○

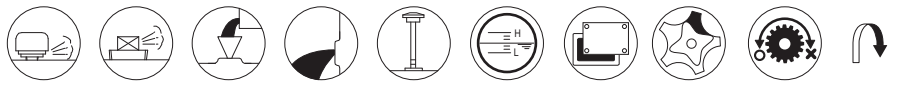

Air Breather, Air Vent, Oil Fill, Drain Plug, Dip Stick, Oil Gauge, Inspection Cover, Oil Pump, Backstop (Option), Opposite Side

DIMENSIONS Parallel Shaft Double Reduction Vertical Mounting 9090 ▶ 9115

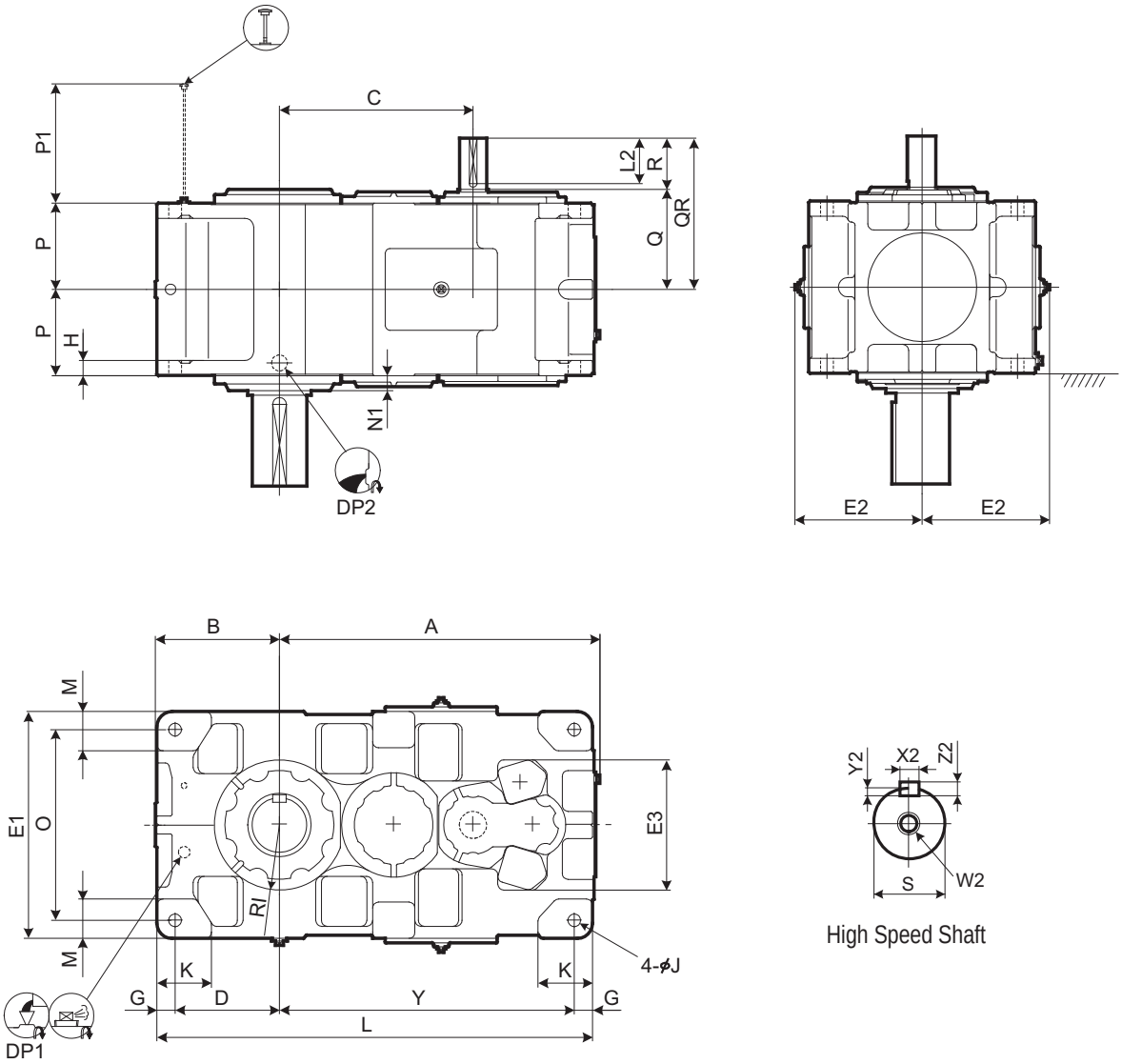

Size	A	B	C	D	E1	E2	E3	G	H	RI	J	K	L	M	N1	O	P	P1	Y
9090	1060	410	640	345	750	421	430	60	50	215	42	180	1440	130	50	630	285	394	975
9095	1090	440	670	375	800	446	430	60	50	235	42	200	1500	140	50	680	285	394	1005
9100	1194	450	724	375	850	471	500	70	55	235	48	200	1610	150	60	710	325	443	1095
9105	1228	485	758	410	900	496	500	70	55	260	48	220	1680	160	60	760	325	443	1130
9110	1344	500	824	420	950	521	500	75	60	265	56	220	1810	170	55	800	355	475	1240
9115	1393	550	873	470	1000	546	500	75	60	280	56	250	1910	180	55	850	355	475	1290

Size	High Speed Shaft									DP1	DP2	Wt. kg	Oil Qty. L
	Q	QR	R	S	W2/Depth	Key							
						X2	Y2	Z2	L2				
9090	330	500	170	90m6	M24/50	25	9	14	150	1"	1 1/2"	2070	90
9095	330	500	170	90m6	M24/50	25	9	14	150	1"	1 1/2"	2330	120
9100	375	585	210	100m6	M24/50	28	10	16	190	1"	1 1/2"	2820	140
9105	375	585	210	100m6	M24/50	28	10	16	190	1"	1 1/2"	3300	175
9110	405	615	210	110m6	M24/50	28	10	16	190	1"	1 1/2"	3950	200
9115	405	615	210	110m6	M24/50	28	10	16	190	1"	1 1/2"	4470	255

※ 9090 ~ 9115 are equipped with motor driven pumps. For details consult us.

Unit: mm

1. Key and keyways are based on ISO R773-1969 Close keys (JIS B1301-1996 Parallel key in fastening type)
2. The oil quantity is approximate. Oil shall be supplied within the range shown on the oil gauge.
3. Shaft arrangement RR is equipped with visible. Refer to page C-31.
4. Refer to the page C-16 for dimensions not shown in these drawings.
5. Refer to the page C-31 for the dimension of optional parts.

DIMENSIONS Parallel Shaft Double Reduction Vertical Mounting 9090 ▶ 9115

Slow Speed Shaft

Solid Shaft	Hollow Shaft (Shrink Type)
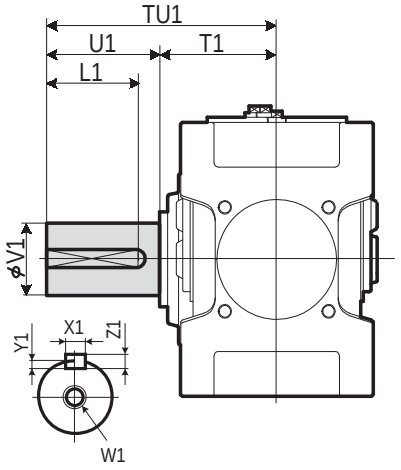	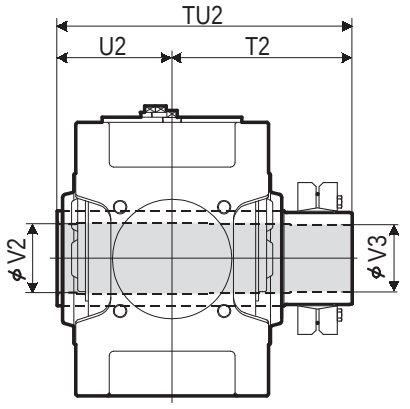 Refer to the page C-18 for details.

Size	Solid Shaft									Hollow Shaft (Shrink Disk Type)				
	TU1	T1	U1	V1	W1/Depth	Key X1	Key Y1	Key Z1	Key L1	TU2	T2	U2	V2	V3
9090	650	350	300	180m6	M30/60	45	15	25	270	844	494	350	193	190
9095	700	350	350	190m6	M30/60	45	15	25	320	859	509	350	203	200
9100	740	390	350	200m6	M30/60	45	15	25	320	934	544	390	213	210
9105	740	390	350	220m6	M30/60	50	17	28	320	949	559	390	223	220
9110	770	420	350	220m6	M30/60	50	17	28	320	1030	610	420	243	240
9115	830	420	410	240m6	M30/60	56	20	32	375	1065	645	420	253	250

Unit: mm

Standard Arrangement Configuration

RL	RR
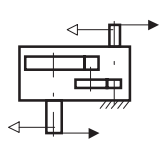	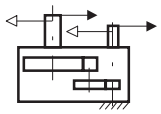

Nomenclature

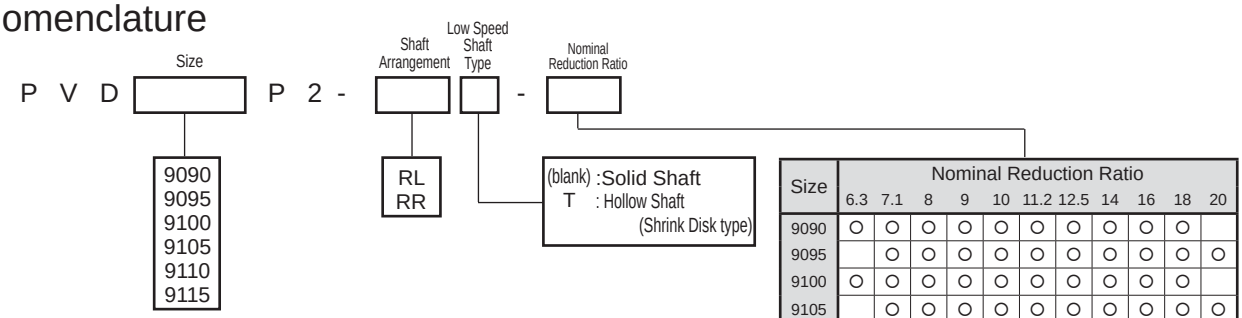

Size	Nominal Reduction Ratio 6.3	7.1	8	9	10	11.2	12.5	14	16	18	20
9090	○	○	○	○	○	○	○	○	○	○	
9095		○	○	○	○	○	○	○	○	○	○
9100	○	○	○	○	○	○	○	○	○	○	
9105		○	○	○	○	○	○	○	○	○	○
9110	○	○	○	○	○	○	○	○	○	○	
9115		○	○	○	○	○	○	○	○	○	○

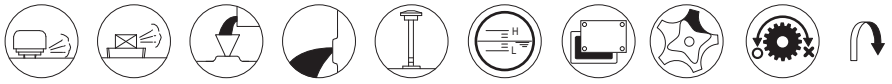

Air Breather, Air Vent, Oil Fill, Drain Plug, Dip Stick, Oil Gauge, Inspection Cover, Oil Pump, Backstop (Option), Opposite Side

DIMENSIONS Parallel Shaft Triple Reduction Vertical Mounting 9015 ▶ 9055

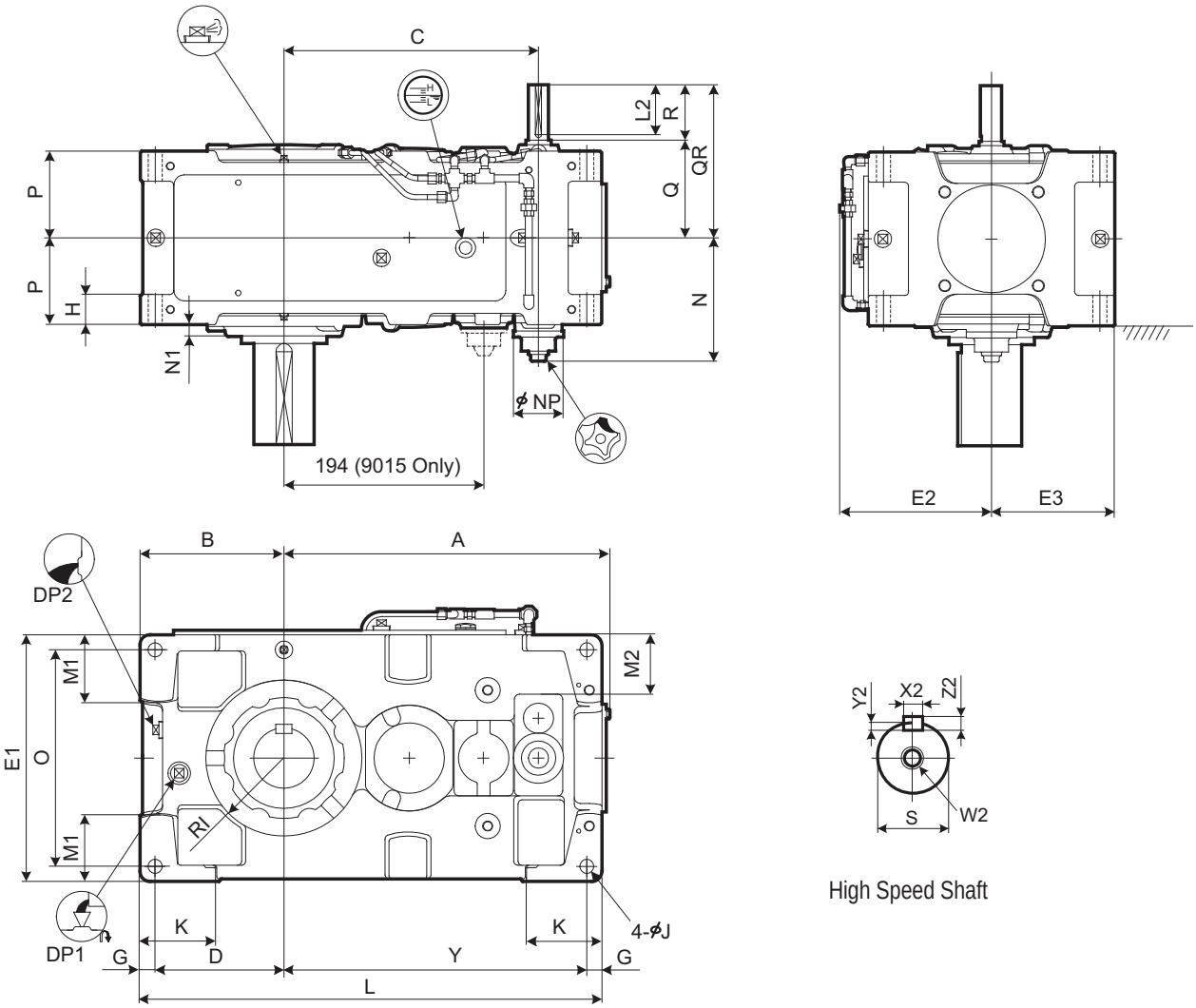

Size	A	B	C	D	E1	E2	E3	G	H	RI	J	K	L	M1	M2	N	N1	NP	O	P	Y
9015	338	160	257	140	270	195	135	20	35	80	15	95	485	70	80	186	25	100	230	102.5	305
9025	408	175	306	155	310	215	155	20	40	87.5	19	110	570	75	90	198.5	23	100	270	117.5	375
9030	453	200	343	175	320	220	160	25	50	105	24	120	640	85	50	211	22	100	270	132.5	415
9035	484	219	374	194	370	245	185	25	50	120	24	120	690	100	75	211	22	100	320	132.5	446
9040	540	235	398	205	400	260	200	30	60	120	28	150	759	100	70	228.5	15	100	340	157.5	494
9045	577	256	437	226	440	277	220	30	60	140	28	150	819	120	90	228.5	17.5	100	380	157.5	533
9050	609	255	467	225	420	270	210	30	60	140	28	150	848	110	83	248.5	23	100	360	172.5	563
9055	648	286	506	256	490	305	245	30	60	155	28	150	918	135	118	248.5	23	100	430	172.5	602

Size	High Speed Shaft									DP1	DP2	Wt. kg	Oil Qty. L
	Q	QR	R	S	W2/Depth	Key							
						X2	Y2	Z2	L2				
9015	130	190	60	25k6	M10/22	8	4	7	50	3/4"	3/4"	105	6
9025	144	204	60	28k6	M10/22	8	4	7	50	3/4"	3/4"	150	8
9030	161	241	80	30k6	M10/22	8	4	7	70	3/4"	3/4"	205	10
9035	161	241	80	30k6	M10/22	8	4	7	70	3/4"	3/4"	225	14
9040	176	256	80	35k6	M12/28	10	5	8	70	1"	1"	305	18
9045	176	256	80	35k6	M12/28	10	5	8	70	1"	1"	375	22
9050	194	304	110	40k6	M16/36	12	5	8	95	1"	1"	445	25
9055	194	304	110	40k6	M16/36	12	5	8	95	1"	1"	505	35

Unit: mm

1. Key and keyways are based on ISO R773-1969 Close keys (JIS B1301-1996 Parallel key in fastening type)
2. The oil quantity is approximate. Oil shall be supplied within the range shown on the oil gauge.
3. Refer to the page C-13 for dimensions not shown in these drawings.
4. Refer to the page C-25 for the dimension of optional parts.

DIMENSIONS Parallel Shaft Triple Reduction Vertical Mounting 9015 ▶ 9055

Slow Speed Shaft

Solid Shaft	Hollow Shaft (Shrink Disk Type)	Hollow Shaft (Key Type)
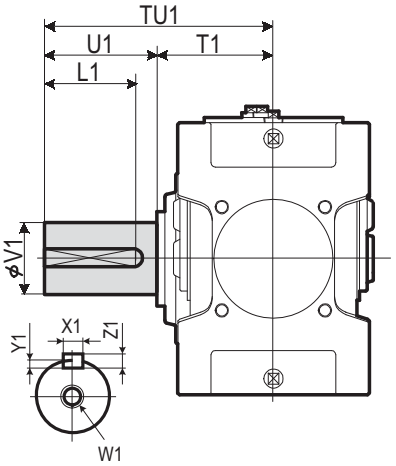	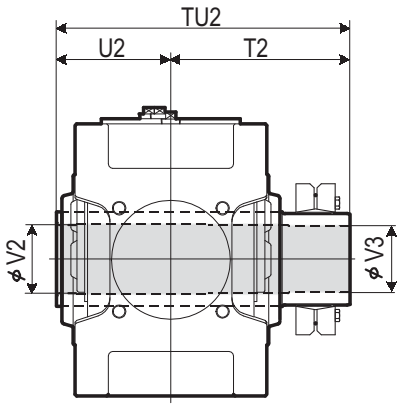 Refer to the page C-18 for details.	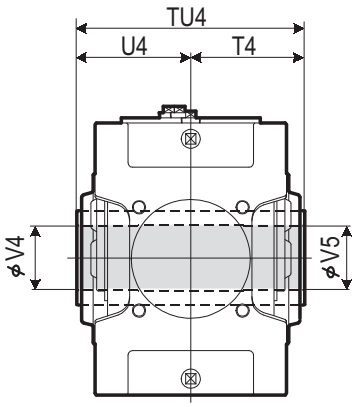 Refer to the page C-18 for details.

Size	Solid Shaft									Hollow Shaft (Shrink Disk Type)					Hollow Shaft (Key Type)				
	TU1	T1	U1	V1	W1/Depth	Key X1	Key Y1	Key Z1	Key L1	TU2	T2	U2	V2	V3	TU4	T4	U4	V4	V5
9015	245	135	110	58m6	M20/42	18	7	11	95	328	193	135	63	60	270	135	135	55	55
9025	285	145	140	70m6	M20/42	20	7.5	12	125	358	213	145	73	70	300	150	150	65	65
9030	330	160	170	80m6	M20/42	22	9	14	150	393	233	160	83	80	330	165	165	75	75
9035	330	160	170	90m6	M20/42	25	9	14	150	403	243	160	88	85	330	165	165	85	85
9040	349	179	170	95m6	M24/50	25	9	14	150	448	268	180	98	95	360	180	180	90	90
9045	391	181	210	105m6	M24/50	28	10	16	190	463	283	180	108	105	370	185	185	105	105
9050	411	201	210	110m6	M24/50	28	10	16	190	503	303	200	108	105	410	205	205	105	105
9055	411	201	210	120m6	M24/50	32	11	18	185	528	323	205	123	120	410	205	205	115	115

Unit: mm

Standard Arrangement Configuration

RL	RR
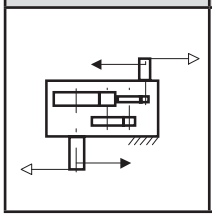	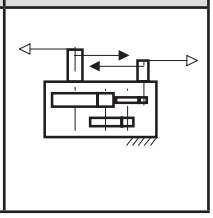

Nomenclature

P V A [ ] P 3 - [ ] [ ] - [ ]

Size: 9015, 9025, 9030, 9035, 9040, 9045, 9050, 9055

Shaft Arrangement: RL, RR

Low Speed Shaft Type:
- (blank) : Solid Shaft
- T : Hollow Shaft (Shrink Disk type)
- K : Hollow Shaft (Key type)

Nominal Reduction Ratio

Size	20	22.4	25	28	31.5	35.5	40	45	50	56	63	71	80	90
9015	○	○	○	○	○	○	○	○						
9025	○	○	○	○	○	○	○	○						
9030	○	○	○	○	○	○	○	○	○	○	○	○		
9035			○	○	○	○	○	○	○	○	○	○	○	○
9040	○	○	○	○	○	○	○	○	○	○	○	○		
9045			○	○	○	○	○	○	○	○	○	○	○	○
9050	○	○	○	○	○	○	○	○	○	○	○	○		
9055			○	○	○	○	○	○	○	○	○	○	○	○

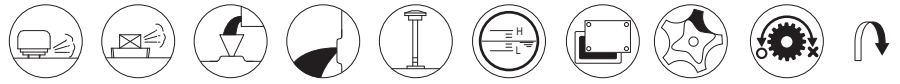

Air Breather, Air Vent, Oil Fill, Drain Plug, Dip Stick, Oil Gauge, Inspection Cover, Oil Pump, Backstop (Option), Opposite Side

DIMENSIONS Parallel Shaft Triple Reduction Vertical Mounting 9060 ▶ 9085

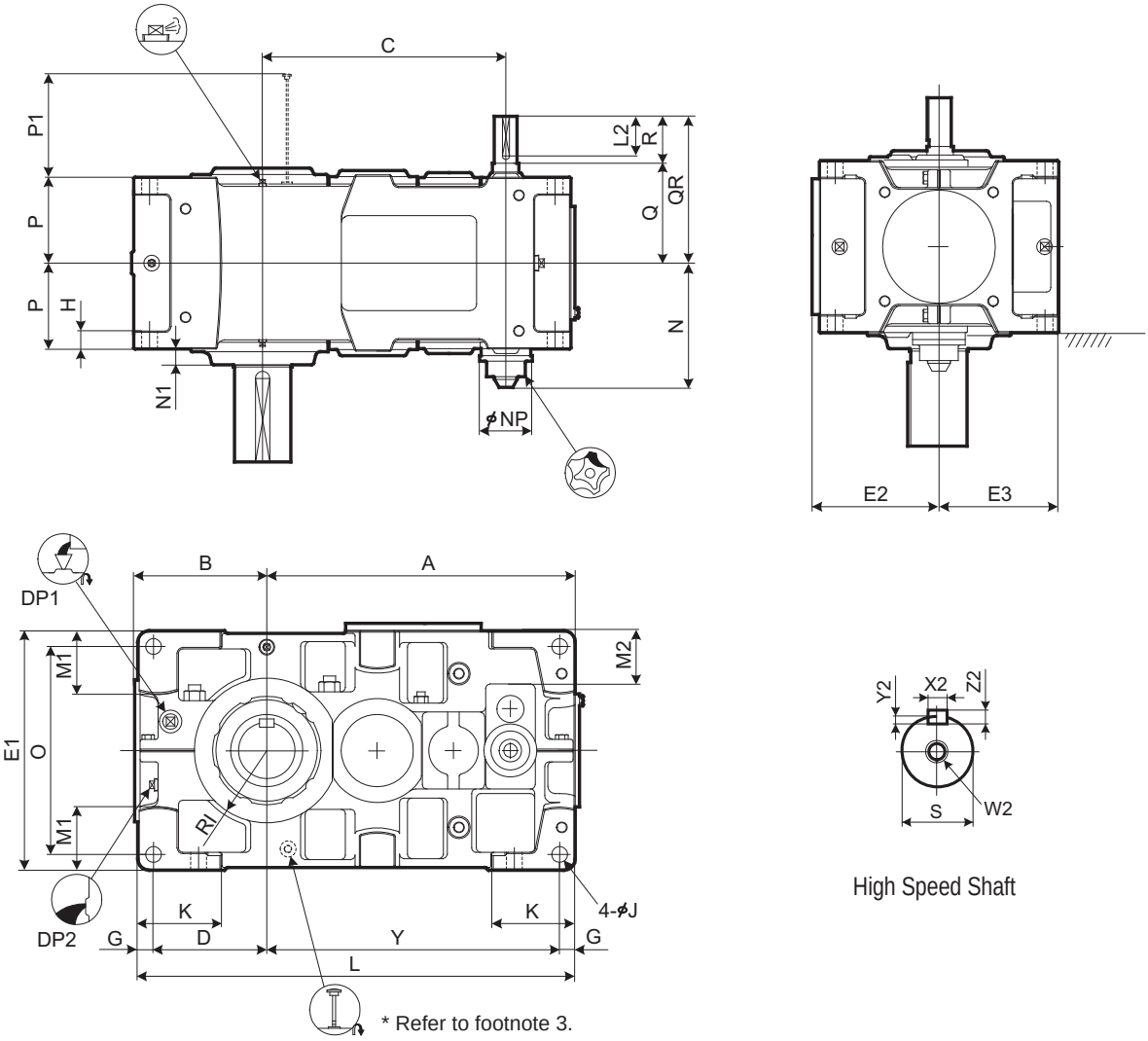

* Refer to footnote 3.

Size	A	B	C	D	E1	E2	E3	G	H	RI	J	K	L	M1	M2	N	N1	NP	O	P	P1	Y
9060	701	299	540	251	530	282	265	35	35	160	35	180	970	140	118	277.5	35	117	460	190	223	649
9065	747	338	586	290	600	317	300	35	35	175	35	180	1055	175	153	277.5	38	117	530	190	223	695
9070	809	336	630	283	600	317	300	40	40	175	42	215	1115	155	128	302.5	38	117	520	215	253	752
9075	862	383	683	330	670	352	335	40	52	190	42	220	1215	195	163	302.5	40	117	590	215	253	805
9080	932	378	725	325	670	352	335	40	52	190	42	220	1275	170	140	322.5	45	117	590	230	283	870
9085	988	422	781	369	750	392	375	40	52	215	42	220	1375	210	180	322.5	40	117	670	230	283	926

Size	High Speed Shaft									DP1	DP2	Wt. kg	Oil Qty. L
	Q	QR	R	S	W2/Depth	Key							
						X2	Y2	Z2	L2				
9060	219	329	110	50k6	M16/36	14	5.5	9	95	1"	1"	660	28
9065	219	329	110	50k6	M16/36	14	5.5	9	95	1"	1"	815	35
9070	244	354	110	55m6	M20/42	16	6	10	95	1"	1"	940	44
9075	244	354	110	55m6	M20/42	16	6	10	95	1"	1"	1160	56
9080	265	405	140	65m6	M20/42	18	7	11	125	1"	1"	1350	57
9085	265	405	140	65m6	M20/42	18	7	11	125	1"	1"	1610	79

Unit: mm

1. Key and keyways are based on ISO R773-1969 Close keys (JIS B1301-1996 Parallel key in fastening type)
2. The oil quantity is approximate. Oil shall be supplied within the range shown on the oil gauge.
3. Shaft arrangement RR is equipped with visible gauge. Refer to page C-28.
4. Refer to the page C-15 for dimensions not shown in these drawings.
5. Refer to the page C-28 for the dimension of optional parts.

DIMENSIONS Parallel Shaft Triple Reduction Vertical Mounting 9060 ▶ 9085

Slow Speed Shaft

Solid Shaft	Hollow Shaft (Shrink Disk Type)	Hollow Shaft (Key Type)
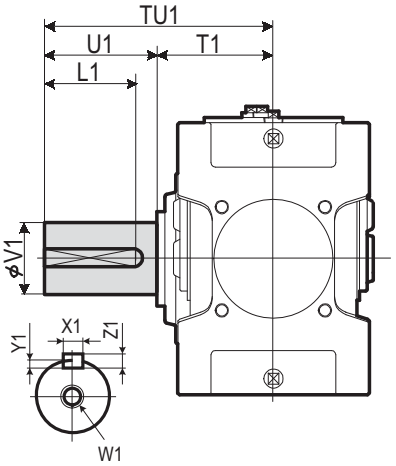	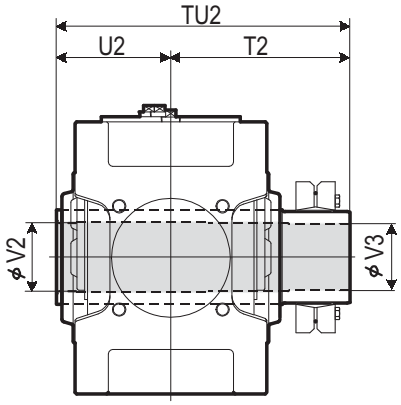 Refer to the page C-18 for details.	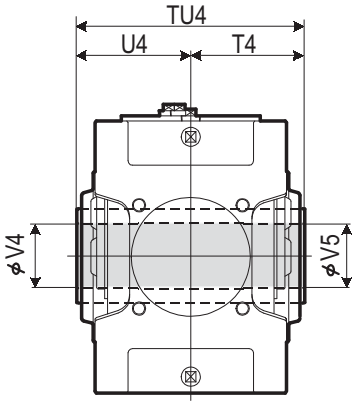 Refer to the page C-18 for details.

Size	Solid Shaft									Hollow Shaft (Shrink Disk Type)					Hollow Shaft (Key Type)				
	TU1	T1	U1	V1	W1/Depth	Key X1	Y1	Z1	L1	TU2	T2	U2	V2	V3	TU4	T4	U4	V4	V5
9060	440	230	210	125m6	M24/50	32	11	18	185	583	353	230	128	125	470	235	235	125	123
9065	484	234	250	140m6	M30/60	36	12	20	225	594	359	235	143	140	480	240	240	145	143
9070	509	259	250	145m6	M30/60	36	12	20	225	644	384	260	148	145	530	265	265	145	143
9075	562	262	300	160m6	M30/60	40	13	22	275	651	386	265	158	155	530	265	265	150	148
9080	582	282	300	165m6	M30/60	40	13	22	275	714	429	285	173	170	570	285	285	165	163
9085	585	285	300	175m6	M30/60	45	15	25	270	714	429	285	183	180	570	285	285	175	173

Unit: mm

Standard Arrangement Configuration

RL	RR
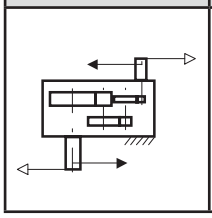	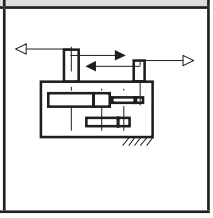

Nomenclature

P V D [ ] P 3 - [ ] [ ] - [ ]

Size: 9060, 9065, 9070, 9075, 9080, 9085

Shaft Arrangement: RL, RR

Low Speed Shaft Type:
- (blank) : Solid Shaft
- T : Hollow Shaft (Shrink Disk type)
- K : Hollow Shaft (Key type)

Nominal Reduction Ratio

Size	Nominal Reduction Ratio 20	22.4	25	28	31.5	35.5	40	45	50	56	63	71	80	90
9060	○	○	○	○	○	○	○	○	○	○	○	○		
9065			○	○	○	○	○	○	○	○	○	○	○	○
9070	○	○	○	○	○	○	○	○	○	○	○	○		
9075			○	○	○	○	○	○	○	○	○	○	○	○
9080	○	○	○	○	○	○	○	○	○	○	○	○		
9085			○	○	○	○	○	○	○	○	○	○	○	○

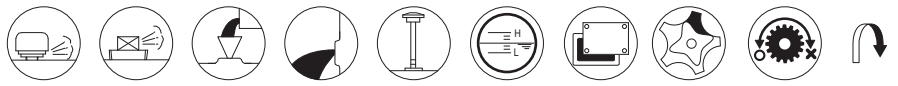

Air Breather, Air Vent, Oil Fill, Drain Plug, Dip Stick, Oil Gauge, Inspection Cover, Oil Pump, Backstop (Option), Opposite Side

DIMENSIONS Parallel Shaft Triple Reduction Vertical Mounting 9090 ▶ 9115

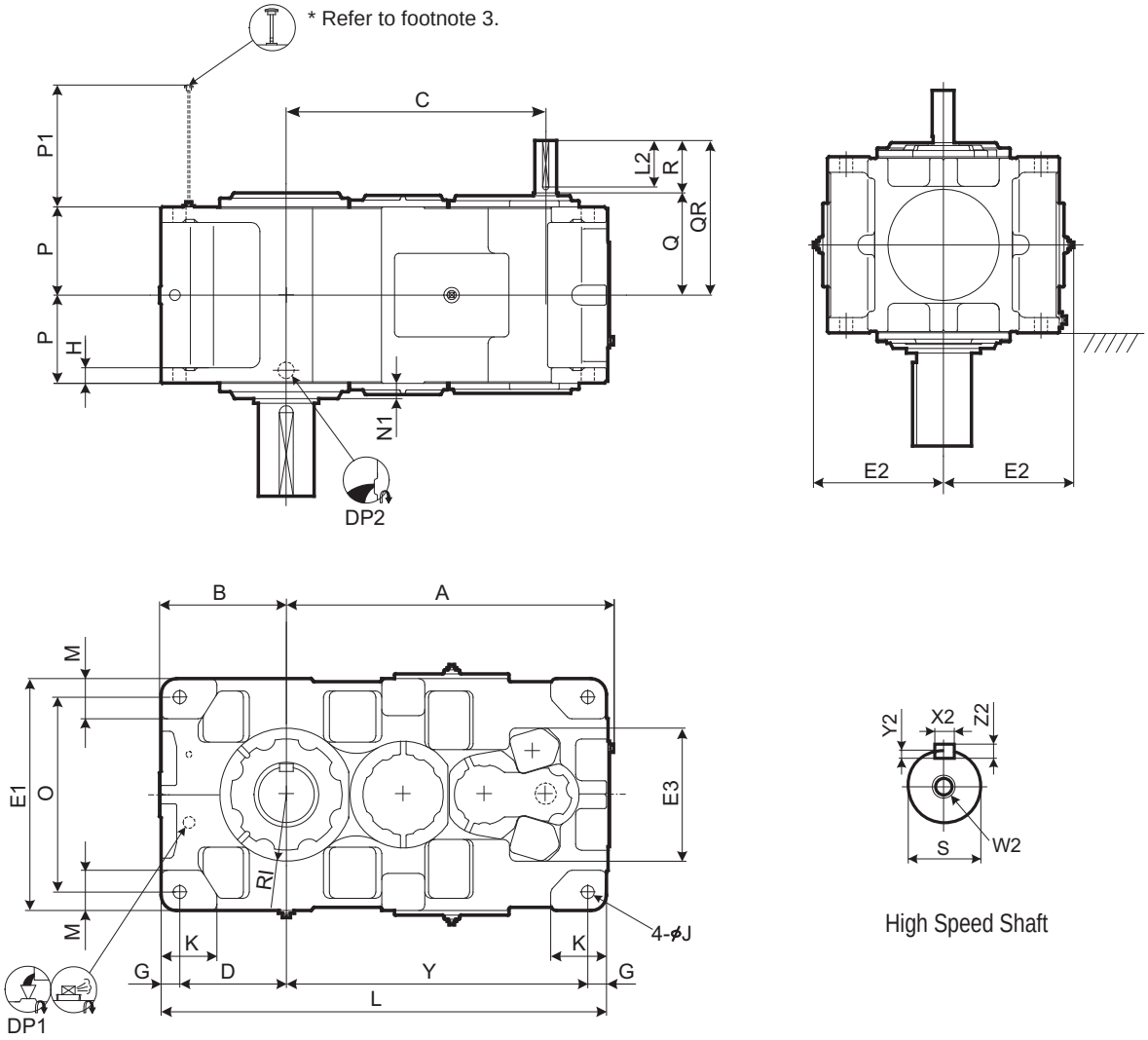

High Speed Shaft

Size	A	B	C	D	E1	E2	E3	G	H	RI	J	K	L	M	N1	O	P	P1	Y
9090	1060	410	837	345	750	421	430	60	50	215	42	180	1440	130	50	630	285	394	975
9095	1090	440	867	375	800	446	430	60	50	235	42	200	1500	140	50	680	285	394	1005
9100	1194	450	950	375	850	471	500	70	55	235	48	200	1610	150	60	710	325	443	1095
9105	1228	485	984	410	900	496	500	70	55	260	48	220	1680	160	60	760	325	443	1130
9110	1344	500	1050	420	950	521	500	75	60	265	56	220	1810	170	55	800	355	475	1240
9115	1393	550	1099	470	1000	546	500	75	60	280	56	250	1910	180	55	850	355	475	1290

Size	High Speed Shaft									DP1	DP2	Wt. kg	Oil Qty. L
	Q	QR	R	S	W2/Depth	Key							
						X2	Y2	Z2	L2				
9090	330	470	140	65m6	M20/42	18	7	11	125	1"	1 1/2"	2120	90
9095	330	470	140	65m6	M20/42	18	7	11	125	1"	1 1/2"	2380	120
9100	375	515	140	75m6	M20/42	20	7.5	12	125	1"	1 1/2"	2870	140
9105	375	515	140	75m6	M20/42	20	7.5	12	125	1"	1 1/2"	3350	175
9110	405	575	170	80m6	M20/42	22	9	14	150	1"	1 1/2"	4000	200
9115	405	575	170	80m6	M20/42	22	9	14	150	1"	1 1/2"	4520	255

※ 9090 ~ 9115 are equipped with motor driven pumps. For details consult us.

Unit: mm

1. Key and keyways are based on ISO R773-1969 Close keys (JIS B1301-1996 Parallel key in fastening type)
2. The oil quantity is approximate. Oil shall be supplied within the range shown on the oil gauge.
3. Shaft arrangement RR is equipped with oil gauge. Refer to the page C-31.
4. Refer to the page C -16 for dimensions not shown in these drawings.
5. Refer to the page C -31 for the dimension of optional parts.

DIMENSIONS Parallel Shaft Triple Reduction Vertical Mounting 9090 ▶ 9115

Slow Speed Shaft

Solid Shaft	Hollow Shaft (Shrink Type)
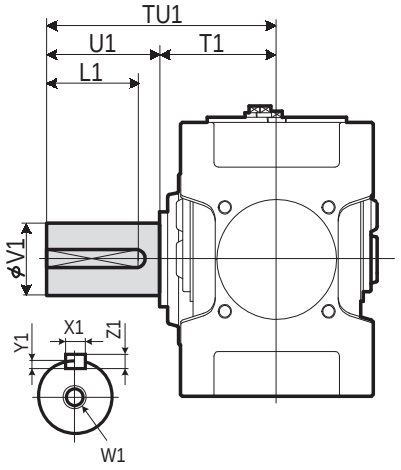	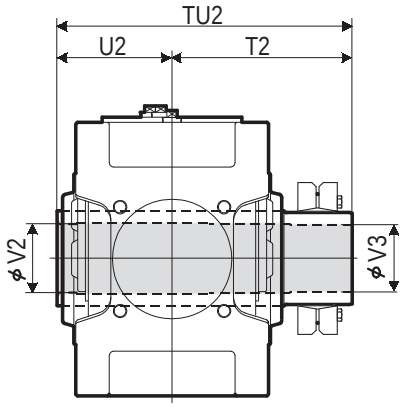 Refer to the page C-18 for details.

Size	Solid Shaft									Hollow Shaft (Shrink Disk Type)				
	TU1	T1	U1	V1	W1/Depth	Key X1	Key Y1	Key Z1	Key L1	TU2	T2	U2	V2	V3
9090	650	350	300	180m6	M30/60	45	15	25	270	844	494	350	193	190
9095	700	350	350	190m6	M30/60	45	15	25	320	859	509	350	203	200
9100	740	390	350	200m6	M30/60	45	15	25	320	934	544	390	213	210
9105	740	390	350	220m6	M30/60	50	17	28	320	949	559	390	223	220
9110	770	420	350	220m6	M30/60	50	17	28	320	1030	610	420	243	240
9115	830	420	410	240m6	M30/60	56	20	32	375	1065	645	420	253	250

Unit: mm

Standard Arrangement Configuration

RL	RR
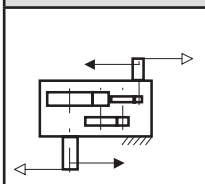	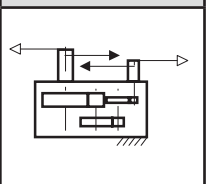

Nomenclature

P V D [ ] P 3 - [ ] [ ] - [ ]

Size: 9090, 9095, 9100, 9105, 9110, 9115

Shaft Arrangement: RL, RR

Low Speed Shaft Type: (blank) :Solid Shaft; T : Hollow Shaft (Shrink Disk type)

Nominal Reduction Ratio

Size	20	22.4	25	28	31.5	35.5	40	45	50	56	63	71	80	90
9090	○	○	○	○	○	○	○	○	○	○	○	○	○	
9095		○	○	○	○	○	○	○	○	○	○	○	○	○
9100	○	○	○	○	○	○	○	○	○	○	○	○	○	
9105		○	○	○	○	○	○	○	○	○	○	○	○	○
9110	○	○	○	○	○	○	○	○	○	○	○	○	○	
9115		○	○	○	○	○	○	○	○	○	○	○	○	○

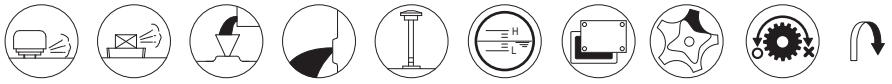

Air Breather | Air Vent | Oil Fill | Drain Plug | Dip Stick | Oil Gauge | Inspection Cover | Oil Pump | Backstop (Option) | Opposite Side

DIMENSIONS Parallel Shaft Quadruple Reduction Vertical Mounting 9030 ▶ 9055

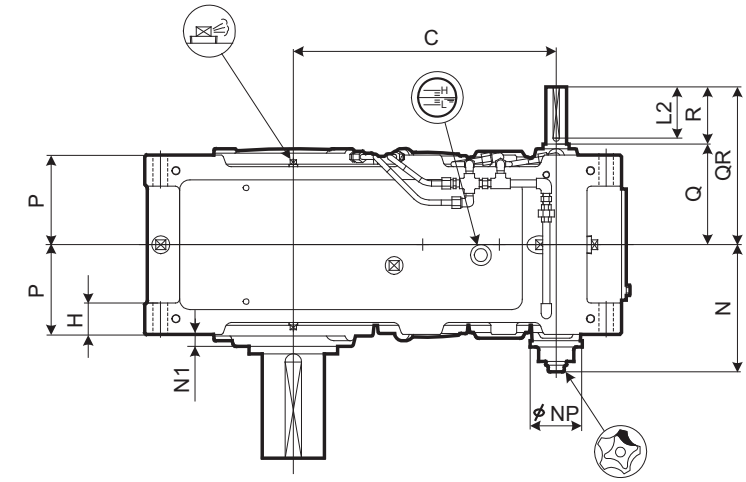

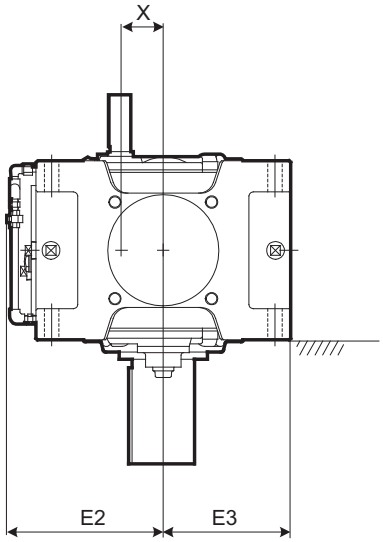

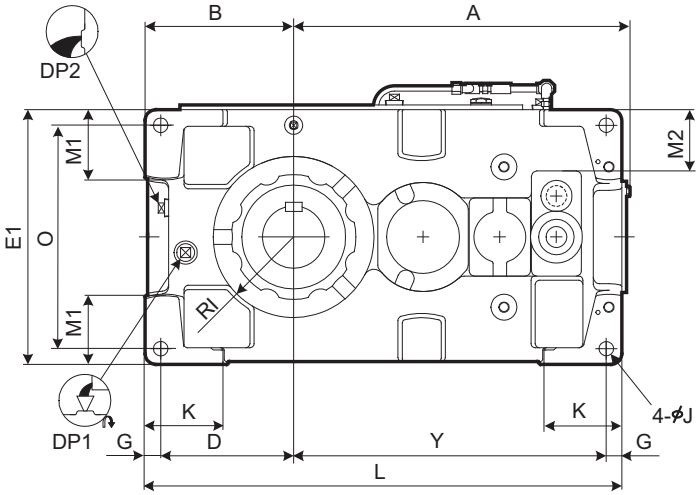

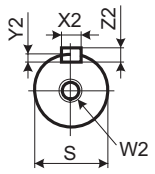

High Speed Shaft

Size	A	B	C	D	E1	E2	E3	G	H	RI	J	K	L	M1	M2	N	N1	NP	O	P	X	Y
9030	453	200	343	175	320	220	160	25	50	105	24	120	640	85	50	211	22	100	270	132.5	63	415
9035	484	219	374	194	370	245	185	25	50	120	24	120	690	100	75	211	22	100	320	132.5	63	446
9040	540	235	398	205	400	260	200	30	60	120	28	150	759	100	70	228.5	15	100	340	157.5	79	494
9045	577	256	437	226	440	277	220	30	60	140	28	150	819	120	90	228.5	17.5	100	380	157.5	79	533
9050	609	255	467	225	420	270	210	30	60	140	28	150	848	110	83	248.5	23	100	360	172.5	79	563
9055	648	286	506	256	490	305	245	30	60	155	28	150	918	135	118	248.5	23	100	430	172.5	79	602

Size	High Speed Shaft									DP1	DP2	Wt. kg	Oil Qty. L
	Q	QR	R	S	W2/Depth	Key							
						X2	Y2	Z2	L2				
9030	159	219	60	25k6	M10/22	8	4	7	50	3/4"	3/4"	210	10
9035	159	219	60	25k6	M10/22	8	4	7	50	3/4"	3/4"	230	14
9040	175	235	60	28k6	M10/22	8	4	7	50	1"	1"	310	17
9045	175	235	60	28k6	M10/22	8	4	7	50	1"	1"	380	21
9050	195	275	80	30k6	M10/22	8	4	7	70	1"	1"	450	23
9055	195	275	80	30k6	M10/22	8	4	7	70	1"	1"	510	33

Unit: mm

1. Key and keyways are based on ISO R773-1969 Close keys (JIS B1301-1996 Parallel key in fastening type)
2. The oil quantity is approximate. Oil shall be supplied within the range shown on the oil gauge.
3. Refer to the page C-13 for dimensions not shown in these drawings.
4. Refer to the page C-25 for the dimension of optional parts.

DIMENSIONS Parallel Shaft Quadruple Reduction Vertical Mounting 9030 ▶ 9055

Slow Speed Shaft

Solid Shaft	Hollow Shaft (Shrink Disk Type)	Hollow Shaft (Key Type)
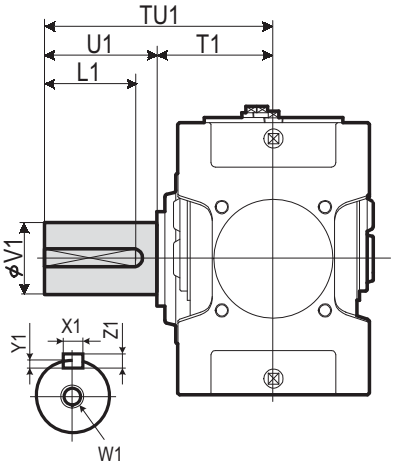	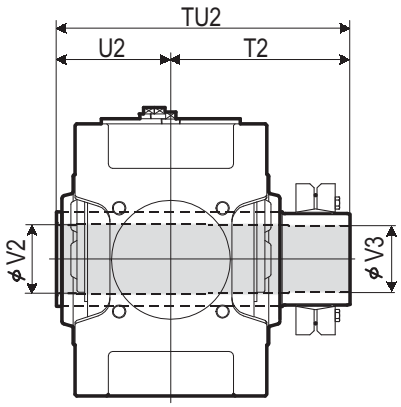 Refer to the page C-18 for details.	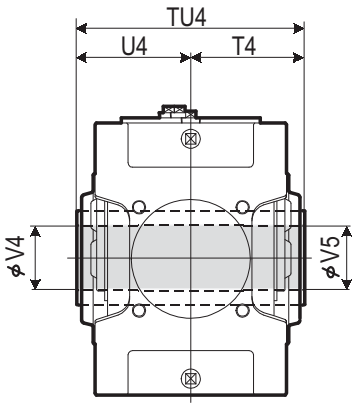 Refer to the page C-18 for details.

Size	Solid Shaft									Hollow Shaft (Shrink Disk Type)					Hollow Shaft (Key Type)				
	TU1	T1	U1	V1	W1/Depth	Key X1	Key Y1	Key Z1	Key L1	TU2	T2	U2	V2	V3	TU4	T4	U4	V4	V5
9030	330	160	170	80m6	M20/42	22	9	14	150	393	233	160	83	80	330	165	165	75	75
9035	330	160	170	90m6	M20/42	25	9	14	150	403	243	160	88	85	330	165	165	85	85
9040	349	179	170	95m6	M24/50	25	9	14	150	448	268	180	98	95	360	180	180	90	90
9045	391	181	210	105m6	M24/50	28	10	16	190	463	283	180	108	105	370	185	185	105	105
9050	411	201	210	110m6	M24/50	28	10	16	190	503	303	200	108	105	410	205	205	105	105
9055	411	201	210	120m6	M24/50	32	11	18	185	528	323	205	123	120	410	205	205	115	115

Unit: mm

Standard Arrangement Configuration

RL	RR
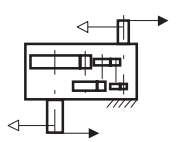	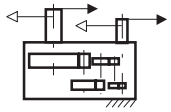

Nomenclature

P V A [ ] P 4 - [ ] [ ] - [ ]

- Size: 9030, 9035, 9040, 9045, 9050, 9055
- Shaft Arrangement: RL, RR
- Low Speed Shaft Type:
  - (blank) : Solid Shaft
  - T : Hollow Shaft (Shrink Disk type)
  - K : Hollow Shaft (Key type)
- Nominal Reduction Ratio

Size	Nominal Reduction Ratio 80	90	100	112	125	140	160	180	200	224	250	280	315	355	400	450	500
9030	○	○	○	○	○	○	○	○	○	○							
9035			○	○	○	○	○	○	○	○	○	○					
9040	○	○	○	○	○	○	○	○	○	○							
9045	○	○	○	○	○	○	○	○	○	○	○	○					
9050	○	○	○	○	○	○	○	○	○	○	○	○	○	○	○		
9055			○	○	○	○	○	○	○	○	○	○	○	○	○	○	○

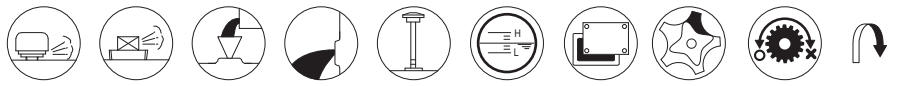

Air Breather · Air Vent · Oil Fill · Drain Plug · Dip Stick · Oil Gauge · Inspection Cover · Oil Pump · Backstop (Option) · Opposite Side

DIMENSIONS Parallel Shaft Quadruple Reduction Vertical Mounting 9060 ▶ 9085

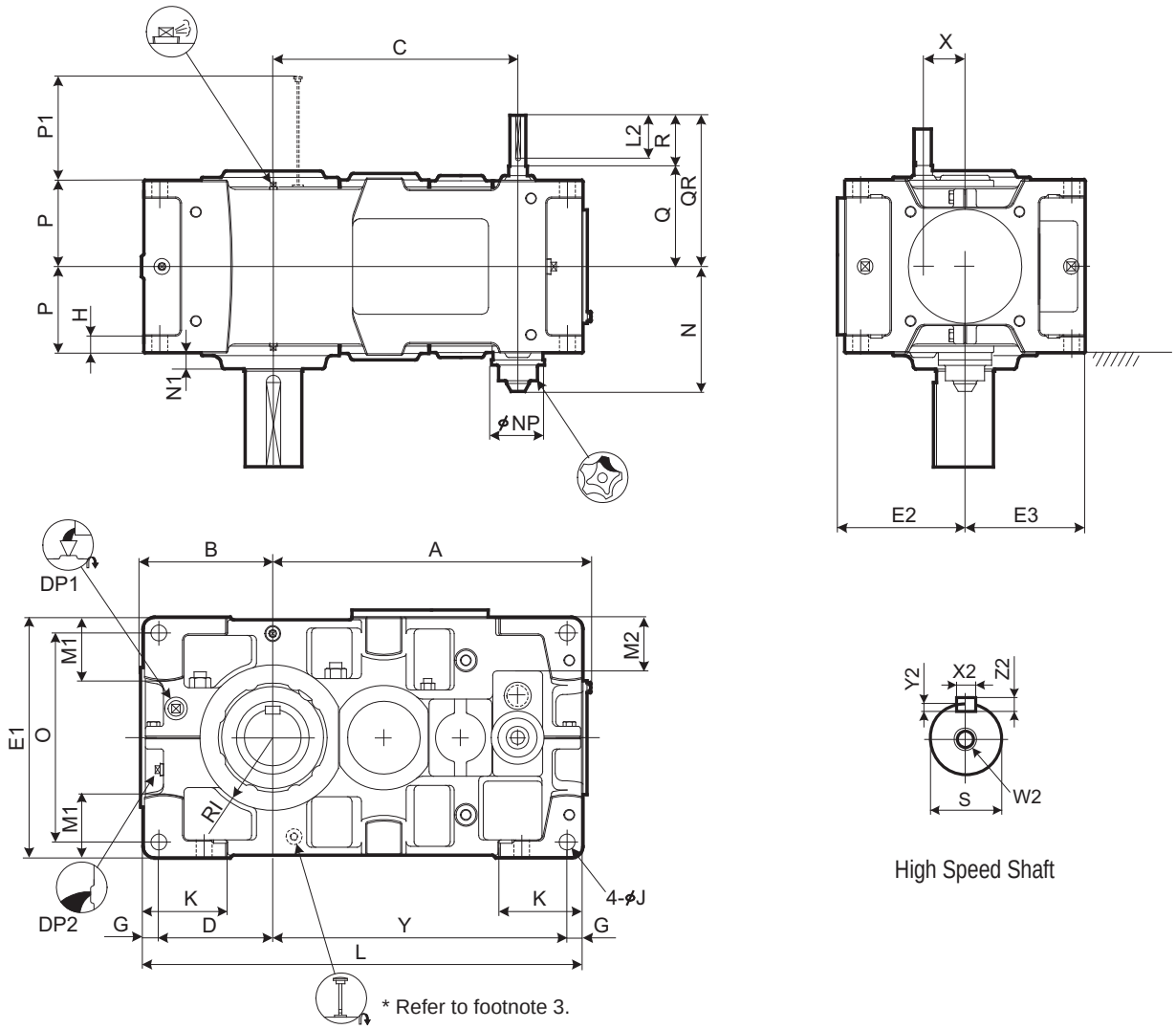

Size	A	B	C	D	E1	E2	E3	G	H	RI	J	K	L	M1	M2	N	N1	NP	O	P	P1	X	Y
9060	701	299	540	251	530	282	265	35	35	160	35	180	970	140	118	277.5	35	117	460	190	213	92	649
9065	747	338	586	290	600	317	300	35	35	175	35	180	1055	175	153	277.5	38	117	530	190	213	92	695
9070	809	336	630	283	600	317	300	40	40	175	42	215	1115	155	128	302.5	38	117	520	215	233	109	752
9075	862	383	683	330	670	352	335	40	52	190	42	220	1215	195	163	302.5	40	117	590	215	233	109	805
9080	932	378	725	325	670	352	335	40	52	190	42	220	1275	170	140	322.5	45	117	590	230	268	126	870
9085	988	422	781	369	750	392	375	40	52	215	42	220	1375	210	180	322.5	40	117	670	230	268	126	926

Size	High Speed Shaft									DP1	DP2	Wt. kg	Oil Qty. L
	Q	QR	R	S	W2/Depth	Key							
						X2	Y2	Z2	L2				
9060	221	301	80	35k6	M12/28	10	5	8	70	1"	1"	660	32
9065	221	301	80	35k6	M12/28	10	5	8	70	1"	1"	815	40
9070	244	354	110	40k6	M16/36	12	5	8	95	1"	1"	950	53
9075	244	354	110	40k6	M16/36	12	5	8	95	1"	1"	1170	67
9080	264	374	110	45k6	M16/36	14	5.5	9	95	1"	1"	1360	65
9085	264	374	110	45k6	M16/36	14	5.5	9	95	1"	1"	1620	89

Unit: mm

1. Key and keyways are based on ISO R773-1969 Close keys (JIS B1301-1996 Parallel key in fastening type)
2. The oil quantity is approximate. Oil shall be supplied within the range shown on the oil gauge.
3. Shaft arrangement RR is equipped with visible gauge. Refer to page C-28.
4. Refer to the page C-15 for dimensions not shown in these drawings.
5. Refer to the page C-28 for the dimension of optional parts.

DIMENSIONS Parallel Shaft Quadruple Reduction Vertical Mounting 9060 ▶ 9085

Slow Speed Shaft

Solid Shaft	Hollow Shaft (Shrink Disk Type)	Hollow Shaft (Key Type)
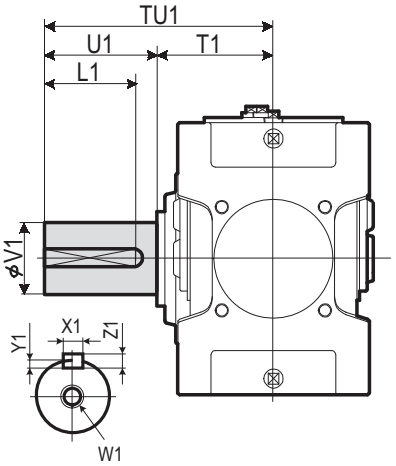	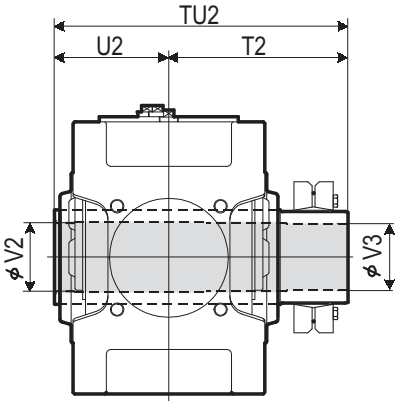 Refer to the page C-18 for details.	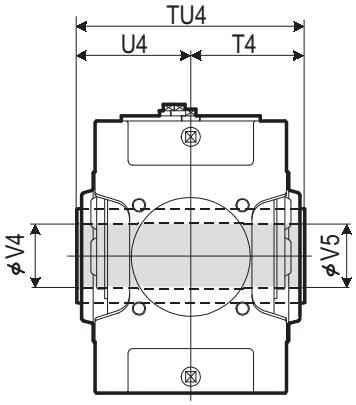 Refer to the page C-18 for details.

Size	Solid Shaft									Hollow Shaft (Shrink Disk Type)					Hollow Shaft (Key Type)				
	TU1	T1	U1	V1	W1/Depth	Key X1	Y1	Z1	L1	TU2	T2	U2	V2	V3	TU4	T4	U4	V4	V5
9060	440	230	210	125m6	M24/50	32	11	18	185	583	353	230	128	125	470	235	235	125	123
9065	484	234	250	140m6	M30/60	36	12	20	225	594	359	235	143	140	480	240	240	145	143
9070	509	259	250	145m6	M30/60	36	12	20	225	644	384	260	148	145	530	265	265	145	143
9075	562	262	300	160m6	M30/60	40	13	22	275	651	386	265	158	155	530	265	265	150	148
9080	582	282	300	165m6	M30/60	40	13	22	275	714	429	285	173	170	570	285	285	165	163
9085	585	285	300	175m6	M30/60	45	15	25	270	714	429	285	183	180	570	285	285	175	173

Unit: mm

Standard Arrangement Configuration

RL	RR
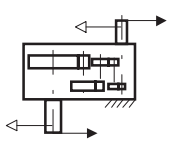	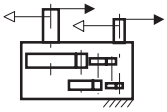

Nomenclature

P V D [ ] P 4 - [ ] [ ] - [ ]

Size: 9060, 9065, 9070, 9075, 9080, 9085

Shaft Arrangement: RL, RR

Low Speed Shaft Type:
(blank) : Solid Shaft
T : Hollow Shaft (Shrink Disk type)
K : Hollow Shaft (Key type)

Nominal Reduction Ratio

Size	80	90	100	112	125	140	160	180	200	224	250	280	315	355	400	450	500
9060	○	○	○	○	○	○	○	○	○	○	○	○	○	○	○		
9065				○	○	○	○	○	○	○	○	○	○	○	○	○	○
9070	○	○	○	○	○	○	○	○	○	○	○	○	○	○	○		
9075			○	○	○	○	○	○	○	○	○	○	○	○	○	○	○
9080	○	○	○	○	○	○	○	○	○	○	○	○	○	○	○		
9085			○	○	○	○	○	○	○	○	○	○	○	○	○	○	○

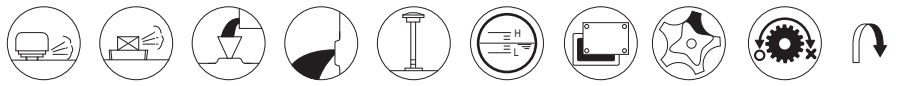

Air Breather, Air Vent, Oil Fill, Drain Plug, Dip Stick, Oil Gauge, Inspection Cover, Oil Pump, Backstop (Option), Opposite Side

DIMENSIONS Parallel Shaft Quadruple Reduction Vertical Mounting 9090 ▶ 9115

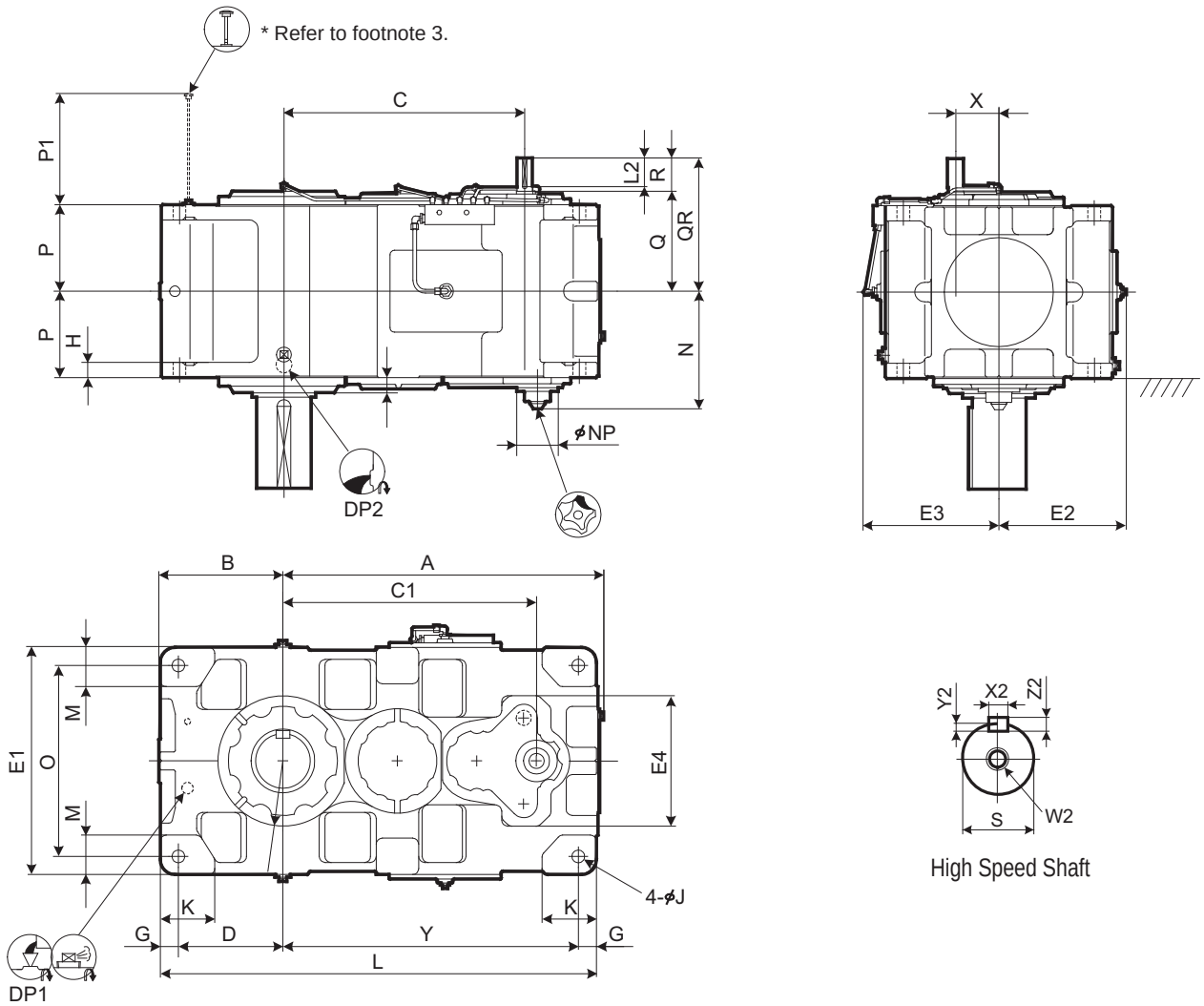

Size	A	B	C	C1	D	E1	E2	E3	E4	G	H	RI	J	K	L	M	N	NP	N1	O	P	P1	X	Y
9090	1060	410	795	837	345	750	421	449	430	60	50	215	42	180	1440	130	381	137	50	630	285	367	142	975
9095	1090	440	825	867	375	800	446	474	430	60	50	235	42	200	1500	140	381	137	50	680	285	367	142	1005
9100	1194	450	901	950	375	850	471	499	500	70	55	235	48	200	1610	150	421	137	60	710	325	409	162	1095
9105	1228	485	935	984	410	900	496	524	500	70	55	260	48	220	1680	160	421	137	60	760	325	409	162	1130
9110	1344	500	1001	1050	420	950	521		500	75	60	265	56	220	1810	170			55	800	355	442	162	1240
9115	1393	550	1050	1099	470	1000	546		500	75	60	280	56	250	1910	180			55	850	355	442	162	1290

Size	High Speed Shaft									DP1	DP2	Wt. kg	Oil Qty. L
	Q	QR	R	S	W2/Depth	Key							
						X2	Y2	Z2	L2				
9090	330	440	110	50k6	M16/36	14	5.5	9	95	1"	1 1/2"	2170	110
9095	330	440	110	50k6	M16/36	14	5.5	9	95	1"	1 1/2"	2430	140
9100	375	515	140	60m6	M20/42	18	7	11	125	1"	1 1/2"	2920	170
9105	375	515	140	60m6	M20/42	18	7	11	125	1"	1 1/2"	3400	210
9110	405	545	140	60m6	M20/42	18	7	11	125	1"	1 1/2"	4050	240
9115	405	545	140	60m6	M20/42	18	7	11	125	1"	1 1/2"	4570	295

※ 9110 ~ 9115 are equipped with motor driven pumps. For details consult us.

Unit: mm

1. Key and keyways are based on ISO R773-1969 Close keys (JIS B1301-1996 Parallel key in fastening type)
2. The oil quantity is approximate. Oil shall be supplied within the range shown on the oil gauge.
3. Shaft arrangement RR is equipped with oil gauge. Refer to the page C-31.
4. Refer to the page C-16 for dimensions not shown in these drawings.
5. Refer to the page C-31 for the dimension of optional parts.

DIMENSIONS Parallel Shaft Quadruple Reduction Vertical Mounting 9090 ▶ 9115

Slow Speed Shaft

Solid Shaft	Hollow Shaft (Shrink Type)
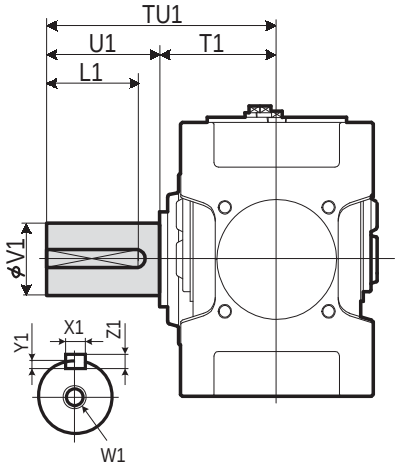	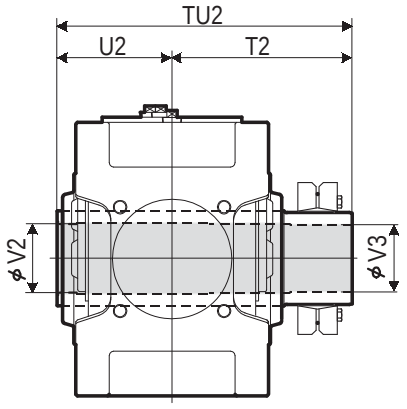 Refer to the page C-18 for details.

Size	Solid Shaft									Hollow Shaft (Shrink Disk Type)				
	TU1	T1	U1	V1	W1/Depth	Key X1	Key Y1	Key Z1	Key L1	TU2	T2	U2	V2	V3
9090	650	350	300	180m6	M30/60	45	15	25	270	844	494	350	193	190
9095	700	350	350	190m6	M30/60	45	15	25	320	859	509	350	203	200
9100	740	390	350	200m6	M30/60	45	15	25	320	934	544	390	213	210
9105	740	390	350	220m6	M30/60	50	17	28	320	949	559	390	223	220
9110	770	420	350	220m6	M30/60	50	17	28	320	1030	610	420	243	240
9115	830	420	410	240m6	M30/60	56	20	32	375	1065	645	420	253	250

Unit: mm

Standard Arrangement Configuration

RL	RR
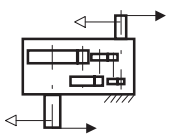	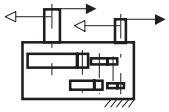

Nomenclature

P V D [ ] P 4 - [ ] [ ] - [ ]

Size: 9090, 9095, 9100, 9105, 9110, 9115

Shaft Arrangement: RL, RR

Low Speed Shaft Type: (blank) : Solid Shaft; T : Hollow Shaft (Shrink Disk type)

Nominal Reduction Ratio

Size	90	100	112	125	140	160	180	200	224	250	280	315	355	400	450
9090	○	○	○	○	○	○	○	○	○	○	○	○	○	○	
9095		○	○	○	○	○	○	○	○	○	○	○	○	○	○
9100	○	○	○	○	○	○	○	○	○	○	○	○	○	○	
9105		○	○	○	○	○	○	○	○	○	○	○	○	○	○
9110	○	○	○	○	○	○	○	○	○	○	○	○	○	○	
9115		○	○	○	○	○	○	○	○	○	○	○	○	○	○

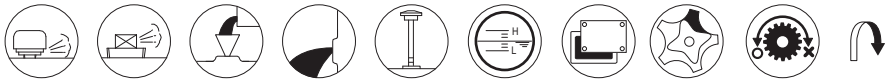

Air Breather, Air Vent, Oil Fill, Drain Plug, Dip Stick, Oil Gauge, Inspection Cover, Oil Pump, Backstop (Option), Opposite Side

DIMENSIONS Parallel Shaft Double Reduction Upright Mounting 9015 ▶ 9055

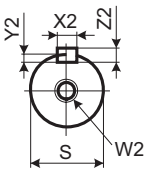

High Speed Shaft

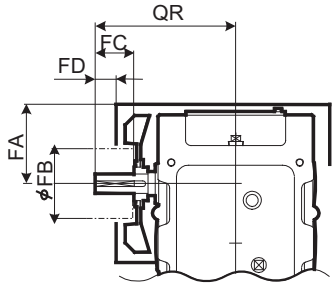

With Fan

Refer to the page C-22 for details.

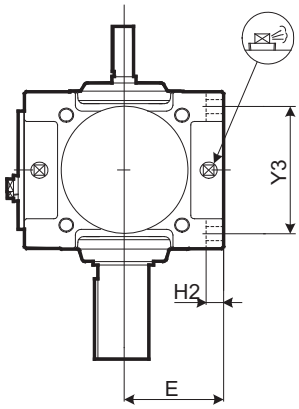

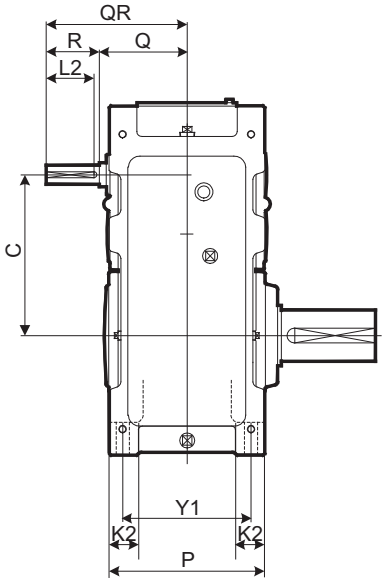

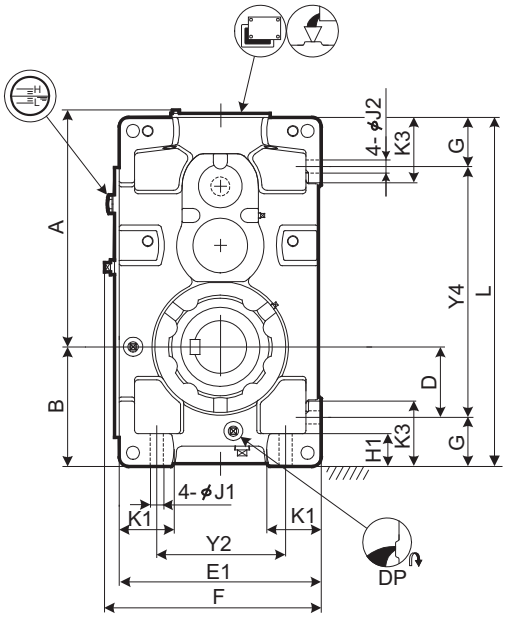

Size	A	B	C	D	E	E1	F	G	H1	H2	J1	J2	K1	K2	K3	L	P	Y1	Y2	Y3	Y4
9015	296	160	194	90	135	270	298	70	50	22	15	15	70	35	95	440	205	170	180	170	300
9025	347	175	227	95	155	310	338	80	55	25	19	19	75	40	110	505	235	195	210	195	345
9030	407	200	264	110	160	320	348	90	60	28	24	24	85	50	120	590	265	215	200	215	410
9035	438	219	295	129	185	370	398	90	60	28	24	24	100	50	120	640	265	215	250	215	460
9040	468	235	306	120	200	400	430	115	75	30	28	28	100	60	150	685	315	255	260	255	455
9045	507	256	345	141	220	440	470	115	75	30	28	28	120	60	150	745	315	255	300	255	515
9050	538	255	358	138.5	210	420	450	116.5	75	32	28	28	110	60	150	775	345	285	280	285	542
9055	577	286	397	171	245	490	520	115	75	32	28	28	135	60	150	845	345	285	350	285	615

Size	High Speed Shaft									Fan				DP	Wt. kg	Oil Qty. L
	Q	QR	R	S	W2/Depth	Key				FA	FB	FC	FD			
						X2	Y2	Z2	L2							
9015	131	211	80	30k6	M10/22	8	4	7	70	129	125	50	30	3/4"	100	9
9025	146	226	80	35k6	M12/28	10	5	8	70	143	140	50	30	3/4"	140	13
9030	159	269	110	40k6	M16/36	12	5	8	95	169	140	80	52	3/4"	195	16
9035	159	269	110	40k6	M16/36	12	5	8	95	169	140	80	52	3/4"	215	22
9040	174	284	110	50k6	M16/36	14	5.5	9	95	188	160	80	52	1"	285	29
9045	174	284	110	50k6	M16/36	14	5.5	9	95	188	160	80	52	1"	345	36
9050	193	303	110	55m6	M20/42	16	6	10	95	208	160	80	52	1"	415	36
9055	193	303	110	55m6	M20/42	16	6	10	95	208	160	80	52	1"	475	47

Unit: mm

1. Key and keyways are based on ISO R773-1969 Close keys (JIS B1301-1996 Parallel key in fastening type)
2. The oil quantity is approximate. Oil shall be supplied within the range shown on the oil gauge.
3. Always remove fan hood when tightening mounting bolt.
4. Refer to the page C-12 for dimensions not shown in these drawings.
5. Refer to the page C-26 for the dimension of optional parts.

DIMENSIONS Parallel Shaft Double Reduction Upright Mounting 9015 ▶ 9055

Slow Speed Shaft

Solid Shaft	Hollow Shaft (Shrink Disk Type)	Hollow Shaft (Key Type)
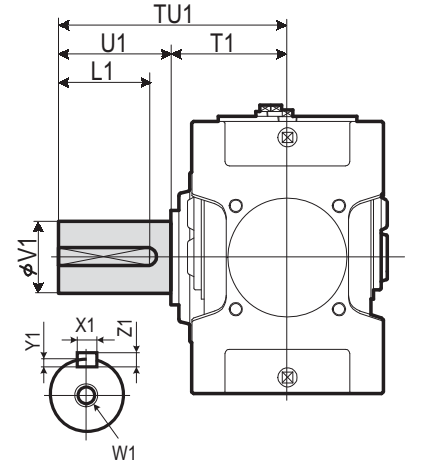	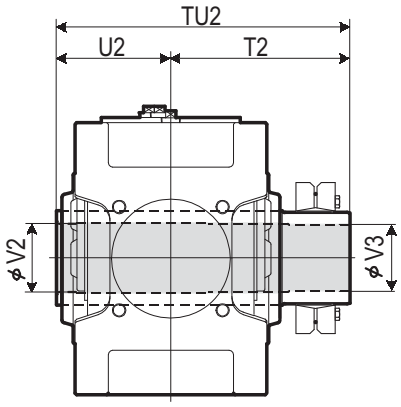 Refer to the page C-18 for details.	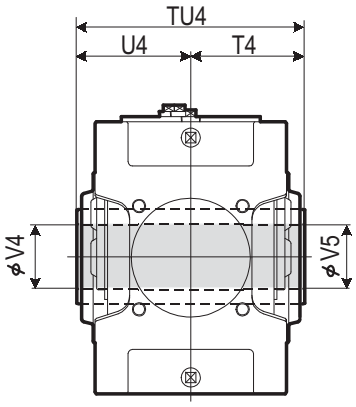 Refer to the page C-18 for details.

Size	Solid Shaft									Hollow Shaft (Shrink Disk Type)					Hollow Shaft (Key Type)				
	TU1	T1	U1	V1	W1/Depth	Key X1	Key Y1	Key Z1	Key L1	TU2	T2	U2	V2	V3	TU4	T4	U4	V4	V5
9015	245	135	110	58m6	M20/42	18	7	11	95	328	193	135	63	60	270	135	135	55	55
9025	285	145	140	70m6	M20/42	20	7.5	12	125	358	213	145	73	70	300	150	150	65	65
9030	330	160	170	80m6	M20/42	22	9	14	150	393	233	160	83	80	330	165	165	75	75
9035	330	160	170	90m6	M20/42	25	9	14	150	403	243	160	88	85	330	165	165	85	85
9040	349	179	170	95m6	M24/50	25	9	14	150	448	268	180	98	95	360	180	180	90	90
9045	391	181	210	105m6	M24/50	28	10	16	190	463	283	180	108	105	370	185	185	105	105
9050	411	201	210	110m6	M24/50	28	10	16	190	503	303	200	108	105	410	205	205	105	105
9055	411	201	210	120m6	M24/50	32	11	18	185	528	323	205	123	120	410	205	205	115	115

Unit: mm

Standard Arrangement Configuration

RL	RR	RB	LR	LL	LB	BL	BR	BB

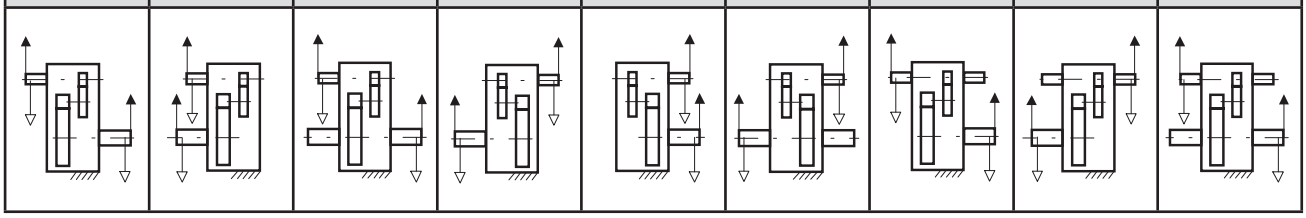

Nomenclature

P W A [ ] P 2 - [ ] [ ] [ ] - [ ]

Size: 9015, 9025, 9030, 9035, 9040, 9045, 9050, 9055

Shaft Arrangement: RL, RR, RB, LR, LL, LB, BL, BR, BB

Low Speed Shaft Type:
- (blank): Solid Shaft
- T: Hollow Shaft (Shrink Disk type)
- K: Hollow Shaft (Key type)

Fan:
- (blank): Without Fan
- F: With Fan

Nominal Reduction Ratio

Size	6.3	7.1	8	9	10	11.2	12.5	14	16	18	20	22.4
9015	○	○	○	○	○	○	○	○	○	○		
9025	○	○	○	○	○	○	○	○	○	○		
9030	○	○	○	○	○	○	○	○	○	○		
9035			○	○	○	○	○	○	○	○	○	○
9040	○	○	○	○	○	○	○	○	○	○		
9045			○	○	○	○	○	○	○	○	○	○
9050	○	○	○	○	○	○	○	○	○	○		
9055			○	○	○	○	○	○	○	○	○	○

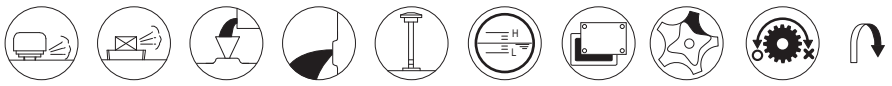

Air Breather | Air Vent | Oil Fill | Drain Plug | Dip Stick | Oil Gauge | Inspection Cover | Oil Pump | Backstop (Option) | Opposite Side

DIMENSIONS Parallel Shaft Double Reduction Upright Mounting 9060 ▶ 9085

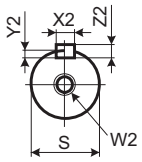

High Speed Shaft

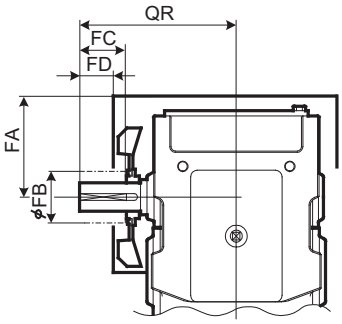

With Fan

Refer to the page C-22 for details.

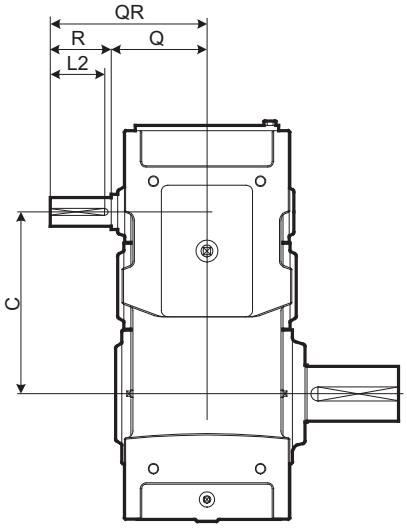

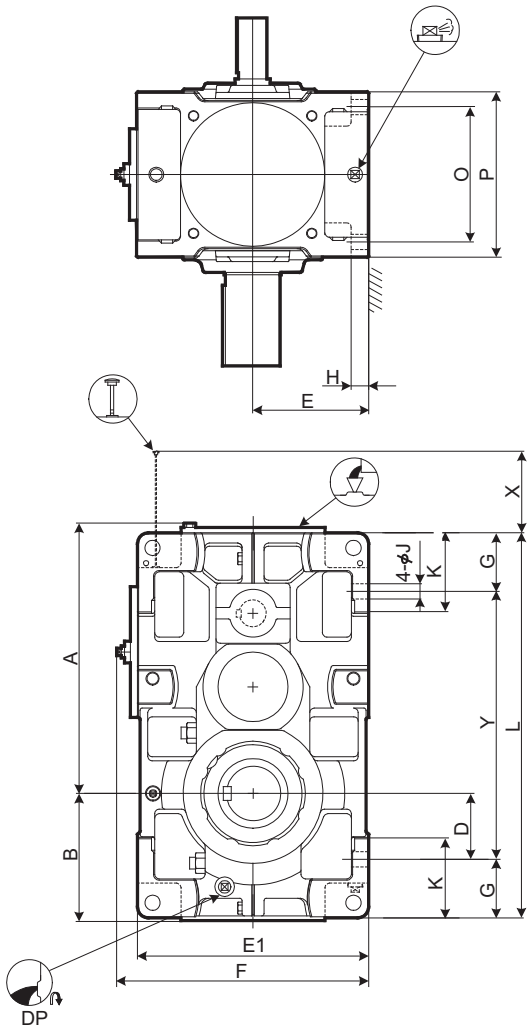

Size	A	B	C	D	E	E1	F	G	H	J	K	L	O	P	X	Y
9060	622	299	414	151	265	530	577	135	35	35	180	885	310	380	133	615
9065	668	338	460	190	300	600	647	135	35	35	180	970	310	380	133	700
9070	720	336	482	163	300	600	647	160	40	42	215	1020	350	430	138	700
9075	773	383	535	210	335	670	717	160	52	42	220	1120	350	430	138	800
9080	813	378	556	205	335	670	717	160	52	42	220	1155	380	460	169	835
9085	869	422	612	249	375	750	797	160	52	42	220	1255	380	460	169	935

Size	High Speed Shaft									Fan				DP	Wt. kg	Oil Qty. L
	Q	QR	R	S	W2/Depth	Key				FA	FB	FC	FD			
						X2	Y2	Z2	L2							
9060	220	360	140	65m6	M20/42	18	7	11	125	240	200	105	65	1"	610	53
9065	220	360	140	65m6	M20/42	18	7	11	125	240	200	105	65	1"	735	67
9070	245	385	140	75m6	M20/42	20	7.5	12	125	274	225	105	65	1"	860	84
9075	245	385	140	75m6	M20/42	20	7.5	12	125	274	225	105	65	1"	1110	100
9080	264	434	170	85m6	M20/42	22	9	14	150	296	225	135	95	1"	1240	109
9085	264	434	170	85m6	M20/42	22	9	14	150	296	225	135	95	1"	1500	137

Unit: mm

1. Key and keyways are based on ISO R773-1969 Close keys (JIS B1301-1996 Parallel key in fastening type)
2. The oil quantity is approximate. Oil shall be supplied within the range shown on the oil gauge.
3. Always remove fan hood when tightening mounting bolt.
4. Refer to the page C-14 for dimensions not shown in these drawings.
5. Refer to the page C-29 for the dimension of optional parts.

DIMENSIONS Parallel Shaft Double Reduction Upright Mounting 9060 ▶ 9085

Slow Speed Shaft

Solid Shaft	Hollow Shaft (Shrink Disk Type)	Hollow Shaft (Key Type)
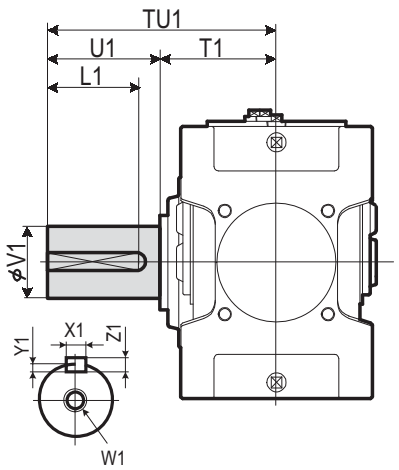	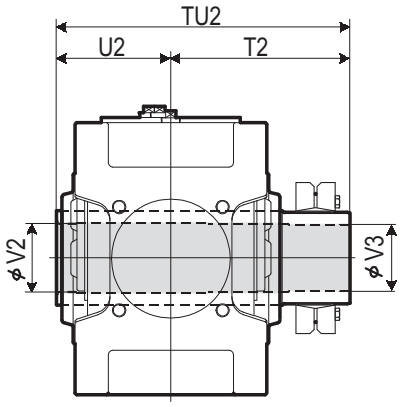 Refer to the page C-18 for details.	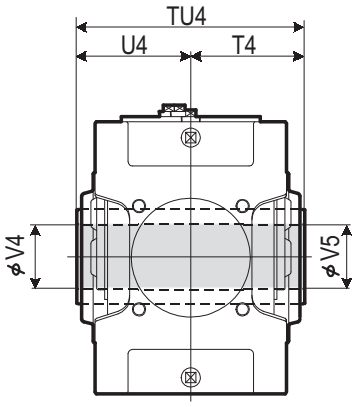 Refer to the page C-18 for details.

Size	Solid Shaft									Hollow Shaft (Shrink Disk Type)					Hollow Shaft (Key Type)				
	TU1	T1	U1	V1	W1/Depth	Key X1	Key Y1	Key Z1	Key L1	TU2	T2	U2	V2	V3	TU4	T4	U4	V4	V5
9060	440	230	210	125m6	M24/50	32	11	18	185	583	353	230	128	125	470	235	235	125	123
9065	484	234	250	140m6	M30/60	36	12	20	225	594	359	235	143	140	480	240	240	145	143
9070	509	259	250	145m6	M30/60	36	12	20	225	644	384	260	148	145	530	265	265	145	143
9075	562	262	300	160m6	M30/60	40	13	22	275	651	386	265	158	155	530	265	265	150	148
9080	582	282	300	165m6	M30/60	40	13	22	275	714	429	285	173	170	570	285	285	165	163
9085	585	285	300	175m6	M30/60	45	15	25	270	714	429	285	183	180	570	285	285	175	173

Unit: mm

Standard Arrangement Configuration

RL	RR	RB	LR	LL	LB	BL	BR	BB
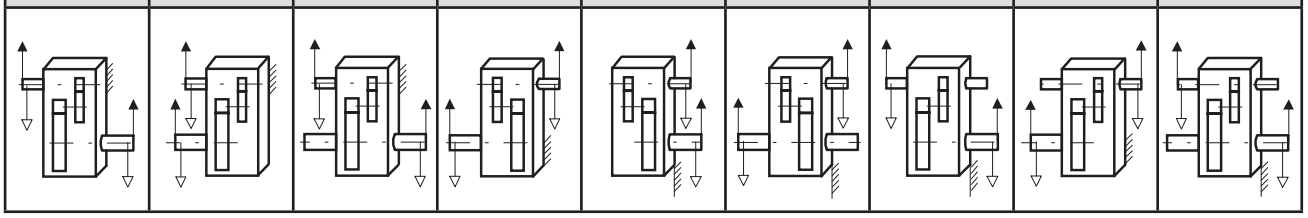								

Nomenclature

P W D [ ] P 2 W - [ ] [ ] [ ] - [ ]

Size: 9060, 9065, 9070, 9075, 9075, 9080, 9085

Shaft Arrangement: RL, RR, RB, LR, LL, LB, BL, BR, BB

Low Speed Shaft Type:
(blank) : Solid Shaft
T : Hollow Shaft (Shrink Disk type)
K : Hollow Shaft (Key type)

Fan:
(blank) : Without Fan
F : With Fan

Nominal Reduction Ratio

Size	6.3	7.1	8	9	10	11.2	12.5	14	16	18	20	22.4
9060	○	○	○	○	○	○	○	○	○	○		
9065			○	○	○	○	○	○	○	○	○	○
9070	○	○	○	○	○	○	○	○	○	○		
9075			○	○	○	○	○	○	○	○	○	○
9080	○	○	○	○	○	○	○	○	○	○		
9085			○	○	○	○	○	○	○	○	○	○

Air Breather, Air Vent, Oil Fill, Drain Plug, Dip Stick, Oil Gauge, Inspection Cover, Oil Pump, Backstop (Option), Opposite Side

DIMENSIONS Parallel Shaft Triple Reduction Upright Mounting 9015 ▶ 9055

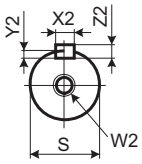

High Speed Shaft

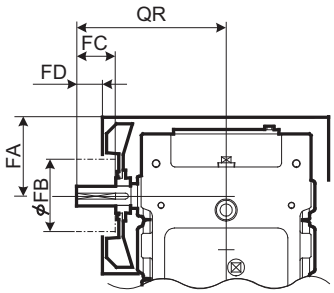

With Fan

Refer to the page C-23 for details.

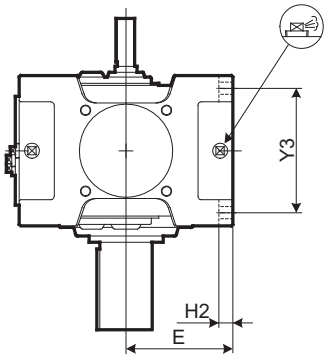

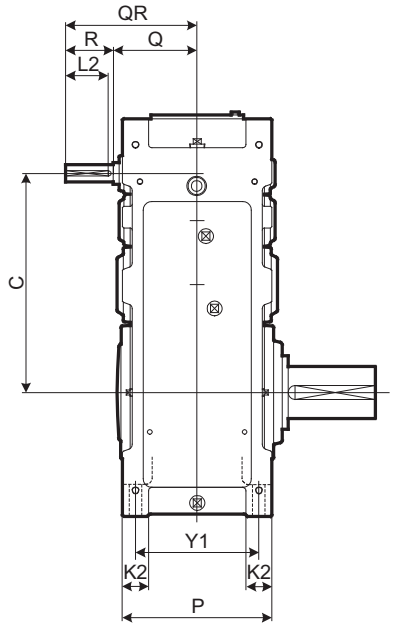

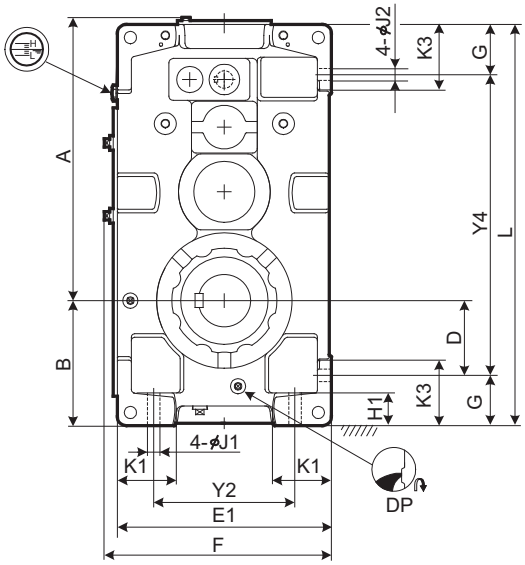

Size	A	B	C	D	E	E1	F	G	H1	H2	J1	J2	K1	K2	K3	L	P	Y1	Y2	Y3	Y4
9015	339	160	257	90	135	270	298	70	50	22	15	15	70	35	95	485	205	170	180	170	345
9025	409	175	306	95	155	310	338	80	55	25	19	19	75	40	110	570	235	195	210	195	410
9030	454	200	343	110	160	320	348	90	60	28	24	24	85	50	120	640	265	215	200	215	460
9035	485	219	374	129	185	370	398	90	60	28	24	24	100	50	120	690	265	215	250	215	510
9040	541	235	398	120	200	400	430	115	75	30	28	28	100	60	150	759	315	255	260	255	529
9045	577	256	437	141	220	440	470	115	75	30	28	28	120	60	150	819	315	255	300	255	589
9050	610	255	467	138.5	210	420	450	116.5	75	32	28	28	110	60	150	848	345	285	280	285	615
9055	649	286	506	171	245	490	520	115	75	32	28	28	135	60	150	918	345	285	350	285	688

Size	High Speed Shaft									Fan				DP	Wt. kg	Oil Qty. L
	Q	QR	R	S	W2/Depth	Key				FA	FB	FC	FD			
						X2	Y2	Z2	L2							
9015	130	190	60	25k6	M10/22	8	4	7	50	111	125	30	10	3/4"	105	11
9025	144	204	60	28k6	M10/22	8	4	7	50	129	125	30	10	3/4"	150	15
9030	161	241	80	30k6	M10/22	8	4	7	70	140	125	50	30	3/4"	205	20
9035	161	241	80	30k6	M10/22	8	4	7	70	150	140	50	22	3/4"	225	25
9040	176	256	80	35k6	M12/28	10	5	8	70	170	140	50	22	1"	305	35
9045	176	256	80	35k6	M12/28	10	5	8	70	170	140	50	22	1"	375	43
9050	194	304	110	40k6	M16/36	12	5	8	95	172	140	80	52	1"	445	45
9055	194	304	110	40k6	M16/36	12	5	8	95	172	140	80	52	1"	505	59

Unit: mm

1. Key and keyways are based on ISO R773-1969 Close keys (JIS B1301-1996 Parallel key in fastening type)
2. The oil quantity is approximate. Oil shall be supplied within the range shown on the oil gauge.
3. Always remove fan hood when tightening mounting bolt.
4. Refer to the page C-13 for dimensions not shown in these drawings.
5. Refer to the page C-26 for the dimension of optional parts.

DIMENSIONS Parallel Shaft Triple Reduction Upright Mounting 9015 ▶ 9055

Slow Speed Shaft

Solid Shaft	Hollow Shaft (Shrink Disk Type)	Hollow Shaft (Key Type)
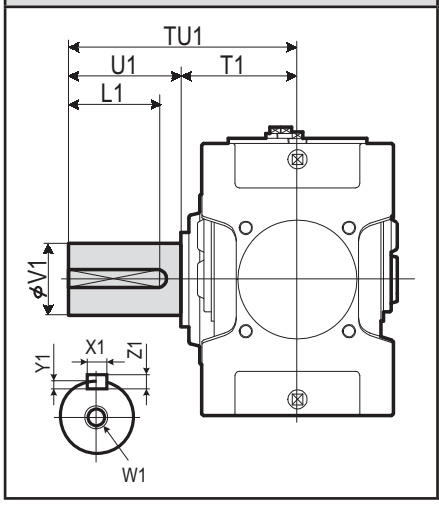	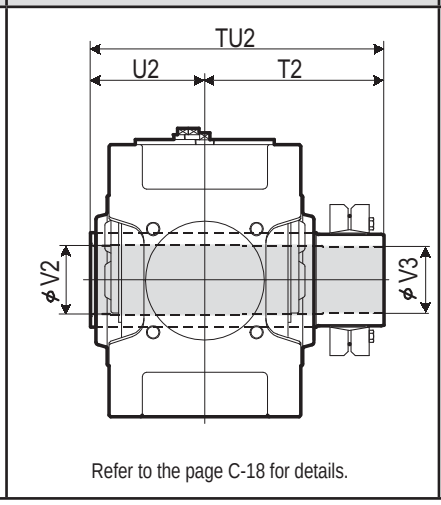 Refer to the page C-18 for details.	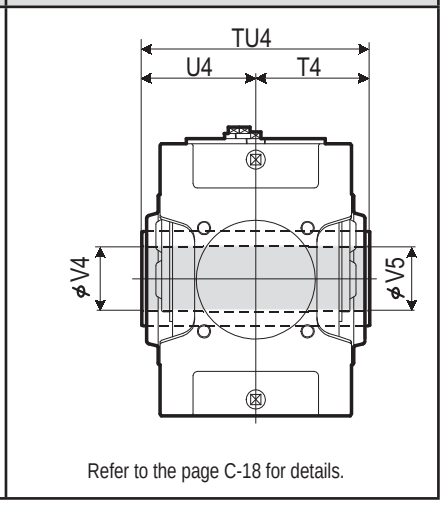 Refer to the page C-18 for details.

Size	Solid Shaft									Hollow Shaft (Shrink Disk Type)					Hollow Shaft (Key Type)				
	TU1	T1	U1	V1	W1/Depth	Key X1	Key Y1	Key Z1	Key L1	TU2	T2	U2	V2	V3	TU4	T4	U4	V4	V5
9015	245	135	110	58m6	M20/42	18	7	11	95	328	193	135	63	60	270	135	135	55	55
9025	285	145	140	70m6	M20/42	20	7.5	12	125	358	213	145	73	70	300	150	150	65	65
9030	330	160	170	80m6	M20/42	22	9	14	150	393	233	160	83	80	330	165	165	75	75
9035	330	160	170	90m6	M20/42	25	9	14	150	403	243	160	88	85	330	165	165	85	85
9040	349	179	170	95m6	M24/50	25	9	14	150	448	268	180	98	95	360	180	180	90	90
9045	391	181	210	105m6	M24/50	28	10	16	190	463	283	180	108	105	370	185	185	105	105
9050	411	201	210	110m6	M24/50	28	10	16	190	503	303	200	108	105	410	205	205	105	105
9055	411	201	210	120m6	M24/50	32	11	18	185	528	323	205	123	120	410	205	205	115	115

Unit: mm

Standard Arrangement Configuration

RL	RR	RB	LR	LL	LB	BL	BR	BB
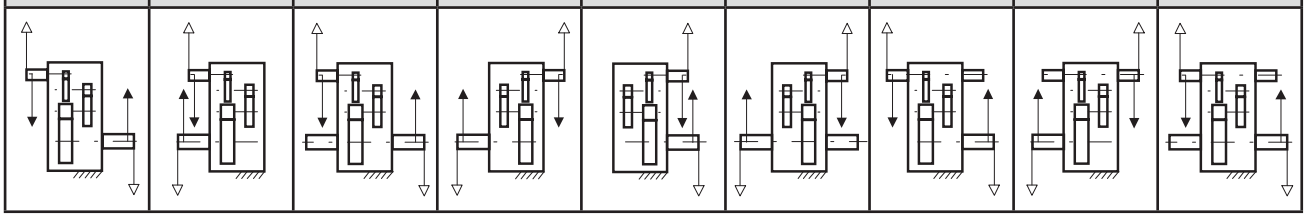								

Nomenclature

P W A [ ] P 3 - [ ] [ ] [ ] - [ ]

Size: 9015, 9025, 9030, 9035, 9040, 9045, 9050, 9055

Shaft Arrangement: RL, RR, RB, LR, LL, LB, BL, BR, BB

Low Speed Shaft Type:
(blank) : Solid Shaft
T : Hollow Shaft (Shrink Disk type)
K : Hollow Shaft (Key type)

Fan:
(blank) : Without Fan
F : With Fan

Nominal Reduction Ratio

Size	20	22.4	25	28	31.5	35.5	40	45	50	56	63	71	80	90
9015	○	○	○	○	○	○	○	○						
9025	○	○	○	○	○	○	○	○						
9030	○	○	○	○	○	○	○	○	○	○	○	○		
9035			○	○	○	○	○	○	○	○	○	○	○	○
9040	○	○	○	○	○	○	○	○	○	○	○	○		
9045			○	○	○	○	○	○	○	○	○	○	○	○
9050	○	○	○	○	○	○	○	○	○	○	○	○		
9055			○	○	○	○	○	○	○	○	○	○	○	○

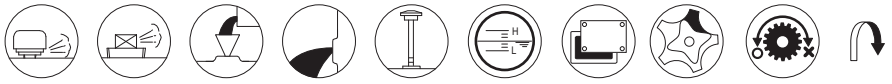

Air Breather | Air Vent | Oil Fill | Drain Plug | Dip Stick | Oil Gauge | Inspection Cover | Oil Pump | Backstop (Option) | Opposite Side

DIMENSIONS Parallel Shaft Triple Reduction Upright Mounting 9060 ▶ 9085

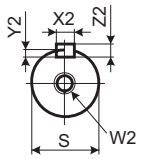

High Speed Shaft

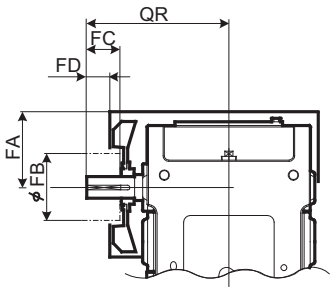

With Fan

Refer to the page C-23 for details.

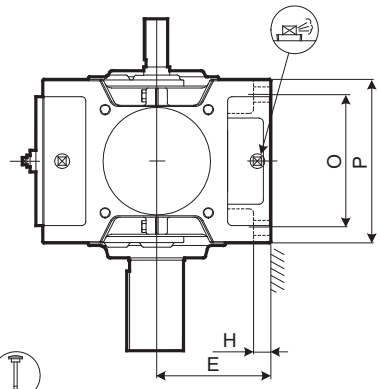

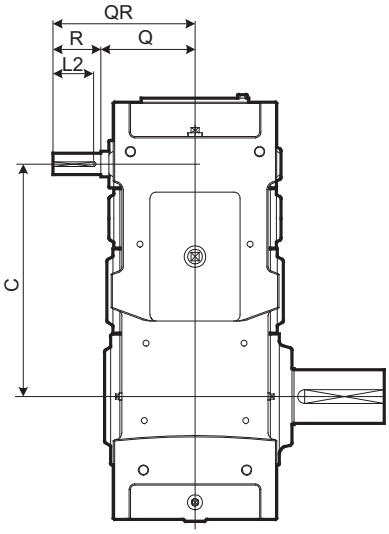

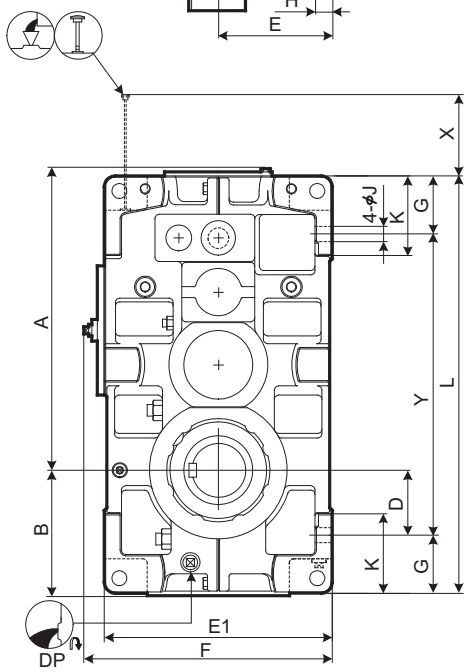

Size	A	B	C	D	E	E1	F	G	H	J	K	L	O	P	X	Y
9060	702	299	540	151	265	530	577	135	35	35	180	970	310	380	216	700
9065	748	338	586	190	300	600	647	135	35	35	180	1055	310	380	216	785
9070	810	336	630	163	300	600	647	160	40	42	215	1115	350	430	233	795
9075	863	383	683	210	335	670	717	160	52	42	220	1215	350	430	233	895
9080	933	378	725	205	335	670	717	160	52	42	220	1275	380	460	285	955
9085	989	422	781	249	375	750	797	160	52	42	220	1375	380	460	285	1055

Size	High Speed Shaft									Fan				DP	Wt. kg	Oil Qty. L
	Q	QR	R	S	W2/Depth	Key				FA	FB	FC	FD			
						X2	Y2	Z2	L2							
9060	219	329	110	50k6	M16/36	14	5.5	9	95	199	160	80	52	1"	660	68
9065	219	329	110	50k6	M16/36	14	5.5	9	95	199	160	80	52	1"	815	85
9070	244	354	110	55m6	M20/42	16	6	10	95	221	160	80	52	1"	940	106
9075	244	354	110	55m6	M20/42	16	6	10	95	221	160	80	52	1"	1160	120
9080	265	405	140	65m6	M20/42	18	7	11	125	247	200	105	65	1"	1350	130
9085	265	405	140	65m6	M20/42	18	7	11	125	247	200	105	65	1"	1610	176

Unit: mm

1. Key and keyways are based on ISO R773-1969 Close keys (JIS B1301-1996 Parallel key in fastening type)
2. The oil quantity is approximate. Oil shall be supplied within the range shown on the oil gauge.
3. Always remove fan hood when tightening mounting bolt.
4. Refer to the page C-15 for dimensions not shown in these drawings.
5. Refer to the page C-29 for the dimension of optional parts.

DIMENSIONS Parallel Shaft Triple Reduction Upright Mounting 9060 ▶ 9085

Slow Speed Shaft

Solid Shaft	Hollow Shaft (Shrink Disk Type)	Hollow Shaft (Key Type)

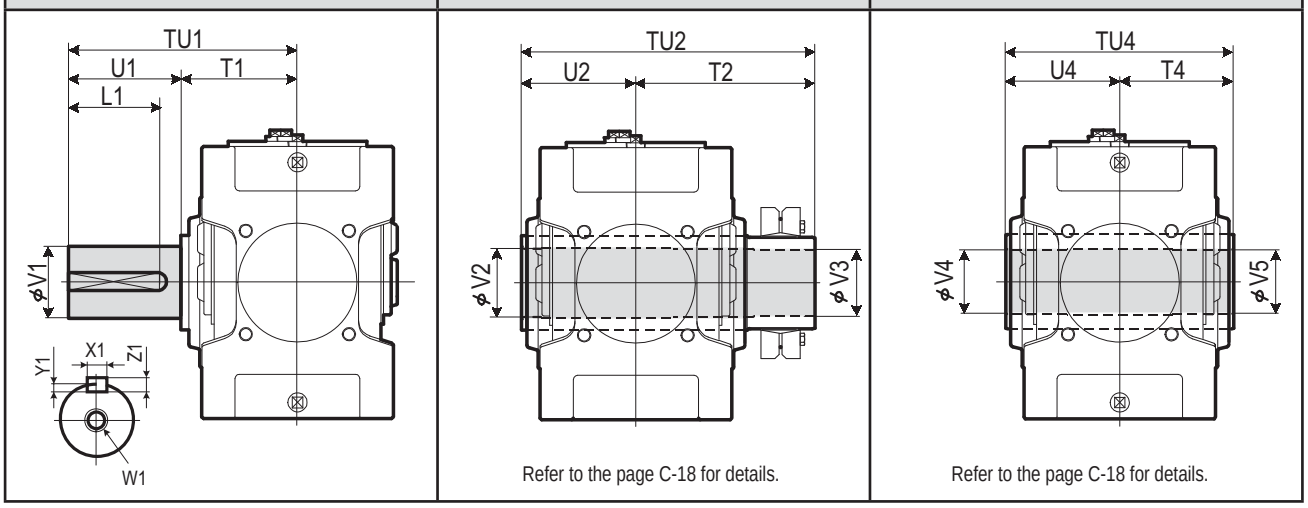

Refer to the page C-18 for details.

Refer to the page C-18 for details.

Size	Solid Shaft									Hollow Shaft (Shrink Disk Type)					Hollow Shaft (Key Type)				
	TU1	T1	U1	V1	W1/Depth	Key X1	Y1	Z1	L1	TU2	T2	U2	V2	V3	TU4	T4	U4	V4	V5
9060	440	230	210	125m6	M24/50	32	11	18	185	583	353	230	128	125	470	235	235	125	123
9065	484	234	250	140m6	M30/60	36	12	20	225	594	359	235	143	140	480	240	240	145	143
9070	509	259	250	145m6	M30/60	36	12	20	225	644	384	260	148	145	530	265	265	145	143
9075	562	262	300	160m6	M30/60	40	13	22	275	651	386	265	158	155	530	265	265	150	148
9080	582	282	300	165m6	M30/60	40	13	22	275	714	429	285	173	170	570	285	285	165	163
9085	585	285	300	175m6	M30/60	45	15	25	270	714	429	285	183	180	570	285	285	175	173

Unit: mm

Standard Arrangement Configuration

RL	RR	RB	LR	LL	LB	BL	BR	BB

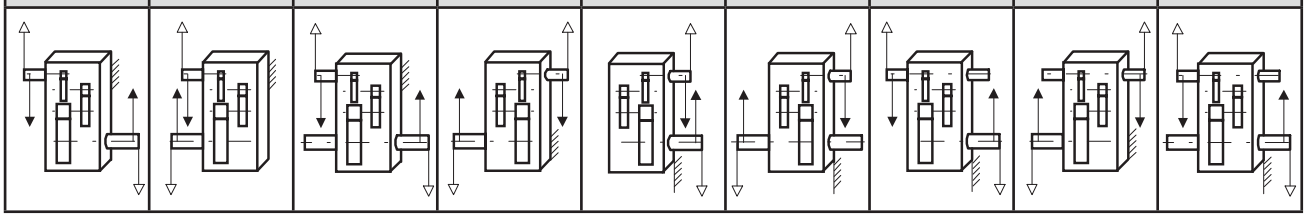

Nomenclature

P W D [ ] P 3 W - [ ] [ ] [ ] - [ ]

Size: 9060, 9065, 9070, 9075, 9080, 9085

Shaft Arrangement: RL, RR, RB, LR, LL, LB, BL, BR, BB

Low Speed Shaft Type:
(blank) : Solid Shaft
T : Hollow Shaft (Shrink Disk type)
K : Hollow Shaft (Key type)

Fan:
(blank) : Without Fan
F : With Fan

Nominal Reduction Ratio

Size	20	22.4	25	28	31.5	35.5	40	45	50	56	63	71	80	90
9060	○	○	○	○	○	○	○	○	○	○	○	○		
9065			○	○	○	○	○	○	○	○	○	○	○	○
9070	○	○	○	○	○	○	○	○	○	○	○	○		
9075			○	○	○	○	○	○	○	○	○	○	○	○
9080	○	○	○	○	○	○	○	○	○	○	○	○		
9085			○	○	○	○	○	○	○	○	○	○	○	○

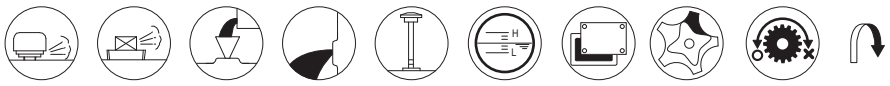

Air Breather, Air Vent, Oil Fill, Drain Plug, Dip Stick, Oil Gauge, Inspection Cover, Oil Pump, Backstop (Option), Opposite Side

DIMENSIONS Parallel Shaft Quadruple Reduction Upright Mounting 9030 ▶ 9055

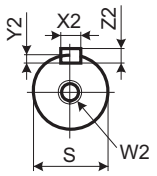

High Speed Shaft

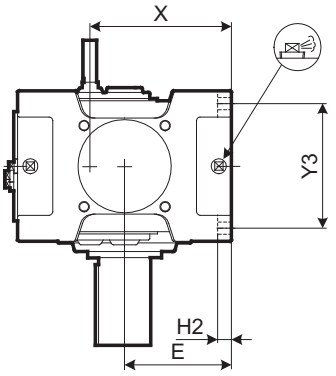

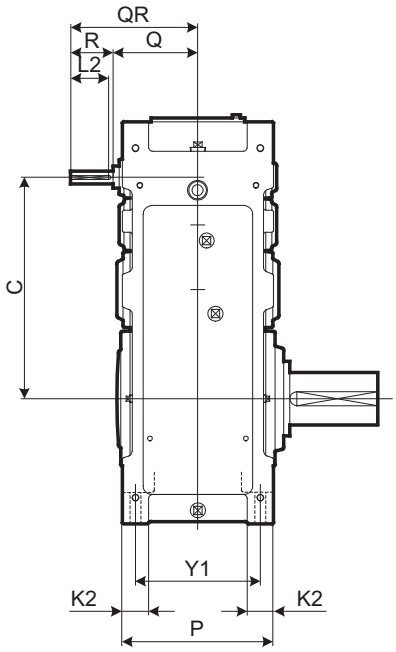

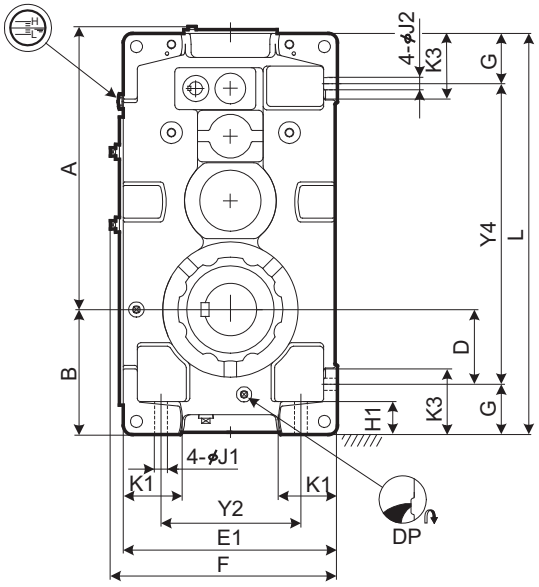

Size	A	B	C	D	E	E1	F	G	H1	H2	J1	J2	K1	K2	K3	L	P	X	Y1	Y2	Y3	Y4
9030	454	200	343	110	160	320	348	90	60	28	24	24	85	50	120	640	265	223	215	200	215	460
9035	485	219	374	129	185	370	398	90	60	28	24	24	100	50	120	690	265	248	215	250	215	510
9040	541	235	398	120	200	400	430	115	75	30	28	28	100	60	150	759	315	279	255	260	255	529
9045	577	256	437	141	220	440	470	115	75	30	28	28	120	60	150	819	315	299	255	300	255	589
9050	610	255	467	138.5	210	420	450	116.5	75	32	28	28	110	60	150	848	345	289	285	280	285	615
9055	649	286	506	171	245	490	520	115	75	32	28	28	135	60	150	918	345	324	285	350	285	688

Size	High Speed Shaft									DP	Wt. kg	Oil Qty. L
	Q	QR	R	S	W2/Depth	Key						
						X2	Y2	Z2	L2			
9030	159	219	60	25k6	M10/22	8	4	7	50	3/4"	210	20
9035	159	219	60	25k6	M10/22	8	4	7	50	3/4"	230	25
9040	175	135	60	28k6	M10/22	8	4	7	50	1"	310	35
9045	175	235	60	28k6	M10/22	8	4	7	50	1"	380	43
9050	195	275	80	30k6	M10/22	8	4	7	70	1"	450	46
9055	195	275	80	30k6	M10/22	8	4	7	70	1"	510	59

Unit: mm

1. Key and keyways are based on ISO R773-1969 Close keys (JIS B1301-1996 Parallel key in fastening type)
2. The oil quantity is approximate. Oil shall be supplied within the range shown on the oil gauge.
3. Refer to the page C-13 for dimensions not shown in these drawings.
4. Refer to the page C-26 for the dimension of optional parts.

DIMENSIONS Parallel Shaft Quadruple Reduction Upright Mounting 9030 ▶ 9055

Slow Speed Shaft

Solid Shaft	Hollow Shaft (Shrink Disk Type)	Hollow Shaft (Key Type)
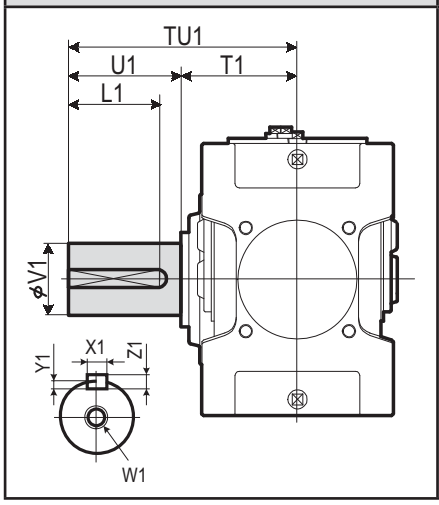	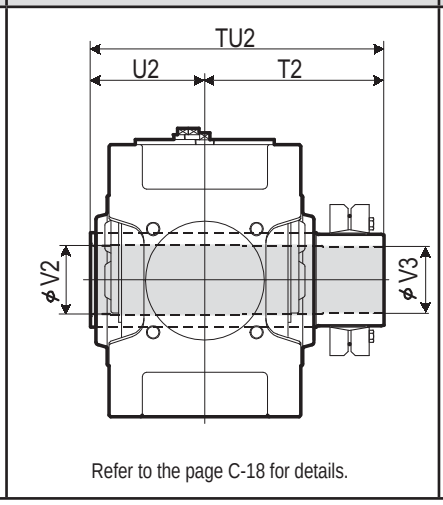 Refer to the page C-18 for details.	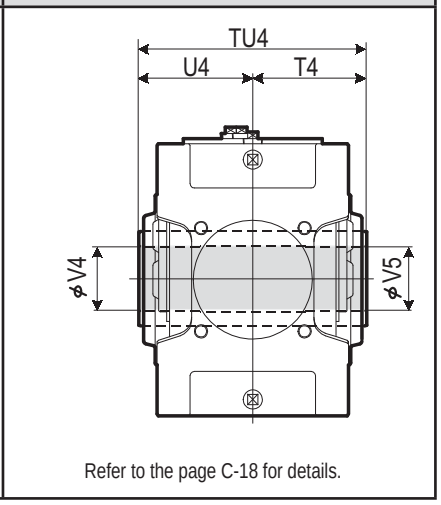 Refer to the page C-18 for details.

Size	Solid Shaft									Hollow Shaft (Shrink Disk Type)					Hollow Shaft (Key Type)				
	TU1	T1	U1	V1	W1/Depth	Key X1	Key Y1	Key Z1	Key L1	TU2	T2	U2	V2	V3	TU4	T4	U4	V4	V5
9030	330	160	170	80m6	M20/42	22	9	14	150	393	233	160	83	80	330	165	165	75	75
9035	330	160	170	90m6	M20/42	25	9	14	150	403	243	160	88	85	330	165	165	85	85
9040	349	179	170	95m6	M24/50	25	9	14	150	448	268	180	98	95	360	180	180	90	90
9045	391	181	210	105m6	M24/50	28	10	16	190	463	283	180	108	105	370	185	185	105	105
9050	411	201	210	110m6	M24/50	28	10	16	190	503	303	200	108	105	410	205	205	105	105
9055	411	201	210	120m6	M24/50	32	11	18	185	528	323	205	123	120	410	205	205	115	115

Unit: mm

Standard Arrangement Configuration

RL	RR	RB	LR	LL	LB	BL	BR	BB
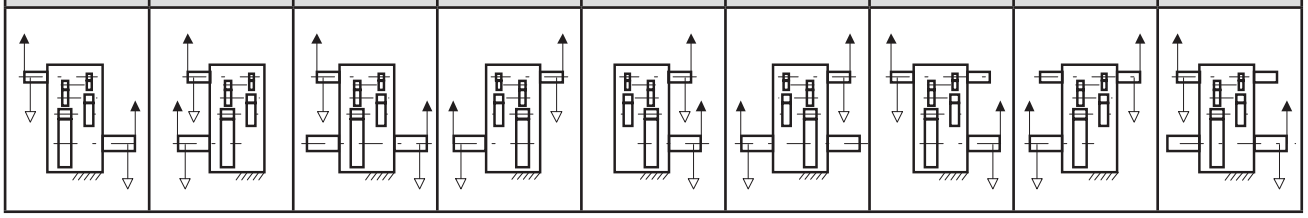								

Nomenclature

P W A [ ] P 4 - [ ] [ ] - [ ]

Size: 9030, 9035, 9040, 9045, 9050, 9055

Shaft Arrangement: RL, RR, RB, LR, LL, LB, BL, BR, BB

Low Speed Shaft Type:
(blank): Solid Shaft
T : Hollow Shaft (Shrink Disk type)
K : Hollow Shaft (Key type)

Nominal Reduction Ratio

Size	80	90	100	112	125	140	160	180	200	224	250	280	315	355	400	450	500
9030	○	○	○	○	○	○	○	○	○	○							
9035			○	○	○	○	○	○	○	○	○	○					
9040	○	○	○	○	○	○	○	○	○	○							
9045	○	○	○	○	○	○	○	○	○	○	○	○					
9050	○	○	○	○	○	○	○	○	○	○	○	○	○	○	○		
9055			○	○	○	○	○	○	○	○	○	○	○	○	○	○	○

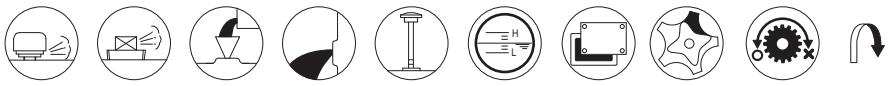

Air Breather, Air Vent, Oil Fill, Drain Plug, Dip Stick, Oil Gauge, Inspection Cover, Oil Pump, Backstop (Option), Opposite Side

DIMENSIONS Parallel Shaft Quadruple Reduction Upright Mounting 9060 ▶ 9085

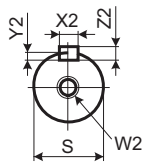

High Speed Shaft

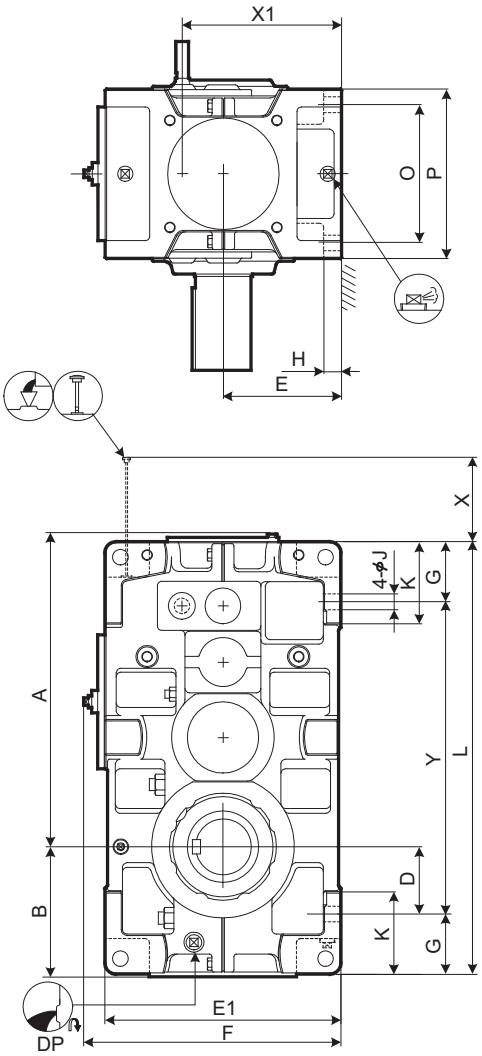

Size	A	B	C	D	E	E1	F	G	H	J	K	L	O	P	X	X1	Y
9060	702	299	540	151	265	530	577	135	35	35	180	970	310	380	73	357	700
9065	748	338	586	190	300	600	647	135	35	35	180	1055	310	380	73	392	785
9070	810	336	630	163	300	600	647	160	40	42	215	1115	350	430	67	409	795
9075	863	383	683	210	335	670	717	160	52	42	220	1215	350	430	67	444	895
9080	933	378	725	205	335	670	717	160	52	42	220	1275	380	460	93	461	955
9085	989	422	781	249	375	750	797	160	52	42	220	1375	380	460	93	501	1055

Size	High Speed Shaft									DP	Wt. kg	Oil Qty. L
	Q	QR	R	S	W2/Depth	Key						
						X2	Y2	Z2	L2			
9060	221	301	80	35k6	M12/28	10	5	8	70	1"	660	69
9065	221	301	80	35k6	M12/28	10	5	8	70	1"	815	86
9070	244	354	110	40k6	M16/36	12	5	8	95	1"	950	108
9075	244	354	110	40k6	M16/36	12	5	8	95	1"	1170	122
9080	264	374	110	45k6	M16/36	14	5.5	9	95	1"	1360	130
9085	264	374	110	45k6	M16/36	14	5.5	9	95	1"	1620	175

Unit: mm

1. Key and keyways are based on ISO R773-1969 Close keys (JIS B1301-1996 Parallel key in fastening type)
2. The oil quantity is approximate. Oil shall be supplied within the range shown on the oil gauge.
3. Refer to the page C-15 for dimensions not shown in these drawings.
4. Refer to the page C-29 for the dimension of optional parts.

DIMENSIONS Parallel Shaft Quadruple Reduction Upright Mounting 9060 ▶ 9085

Slow Speed Shaft

Solid Shaft	Hollow Shaft (Shrink Disk Type)	Hollow Shaft (Key Type)
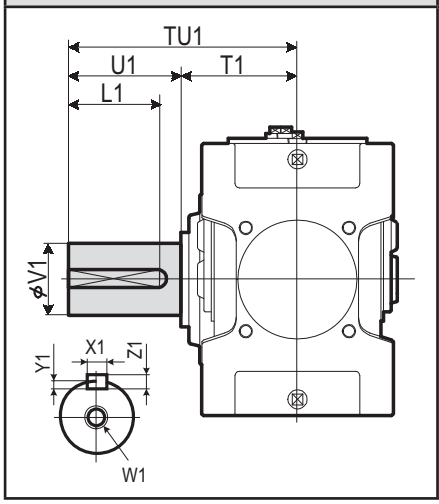	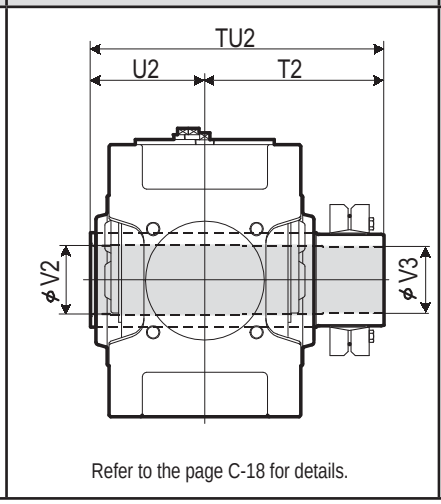 Refer to the page C-18 for details.	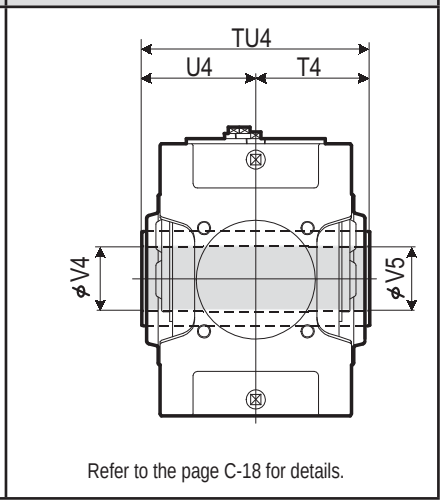 Refer to the page C-18 for details.

Size	Solid Shaft									Hollow Shaft (Shrink Disk Type)					Hollow Shaft (Key Type)				
	TU1	T1	U1	V1	W1/Depth	Key X1	Y1	Z1	L1	TU2	T2	U2	V2	V3	TU4	T4	U4	V4	V5
9060	440	230	210	125m6	M24/50	32	11	18	185	583	353	230	128	125	470	235	235	125	123
9065	484	234	250	140m6	M30/60	36	12	20	225	594	359	235	143	140	480	240	240	145	143
9070	509	259	250	145m6	M30/60	36	12	20	225	644	384	260	148	145	530	265	265	145	143
9075	562	262	300	160m6	M30/60	40	13	22	275	651	386	265	158	155	530	265	265	150	148
9080	582	282	300	165m6	M30/60	40	13	22	275	714	429	285	173	170	570	285	285	165	163
9085	585	285	300	175m6	M30/60	45	15	25	270	714	429	285	183	180	570	285	285	175	173

Unit: mm

Standard Arrangement Configuration

RL	RR	RB	LR	LL	LB	BL	BR	BB
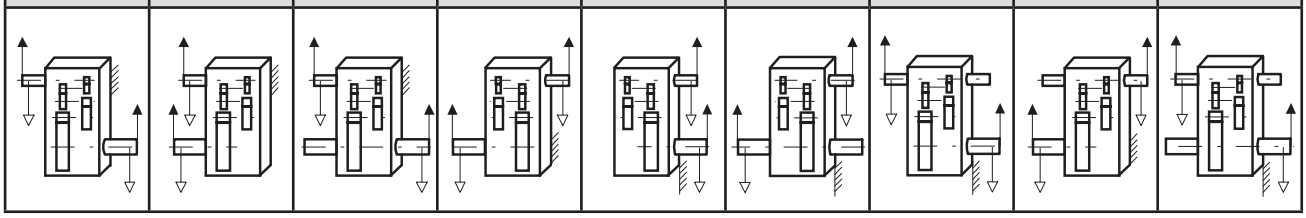								

Nomenclature

P W D [ ] P 4 W - [ ] [ ] - [ ]

Size: 9060, 9065, 9070, 9075, 9080, 9085

Shaft Arrangement: RL, RR, RB, LR, LL, LB, BL, BR, BB

Low Speed Shaft Type:
(blank): Solid Shaft
T : Hollow Shaft (Shrink Disk type)
K : Hollow Shaft (Key type)

Nominal Reduction Ratio

Size	80	90	100	112	125	140	160	180	200	224	250	280	315	355	400	450	500
9060	○	○	○	○	○	○	○	○	○	○	○	○	○	○	○		
9065				○	○	○	○	○	○	○	○	○	○	○	○	○	○
9070	○	○	○	○	○	○	○	○	○	○	○	○	○	○	○		
9075			○	○	○	○	○	○	○	○	○	○	○	○	○	○	○
9080	○	○	○	○	○	○	○	○	○	○	○	○	○	○	○		
9085			○	○	○	○	○	○	○	○	○	○	○	○	○	○	○

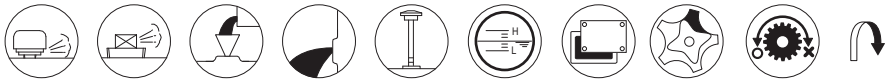

Air Breather, Air Vent, Oil Fill, Drain Plug, Dip Stick, Oil Gauge, Inspection Cover, Oil Pump, Backstop (Option), Opposite Side

C

TECHNICAL DATA

Lubricant and Installation ···C- 2
Painting Specifications and Rust Proof Standard ···C- 3
Moment of Inertia of Right Angle Shaft ···C- 4
GD^2 of Right Angle Shaft ···C- 6
Moment of Inertia of Parallel Shaft ···C- 8
GD^2 of Parallel Shaft ···C-10
Supplementary Dimension Drawing ···C-12
Supplementary Matters to Hollow Shaft ···C-17
Hollow Shaft Related Dimensions ···C-18
Cooling Fan Dimension ···C-20
Option Dimension ···C-24
Formula of Drive System ···C-32

TECHNICAL DATA Lubricant, Installation

Lubricant

The following table shows appropriate viscosity of oil based on ISO and AGMA for respective ambient temperatures and slow speed shaft r/min.

Operation Condition / Application	Output Speed		Ambient Temperature ℃		
			-10 to 15	0 to 30	10 to 50
Continuous Operation	Over 100r/min	ISO* AGMA	VG68 2EP	VG150 4EP	VG220 5EP
	Under 100r/min	ISO* AGMA	VG100 3EP	VG220 5EP	VG320 6EP
Intermittent Operation (ex. Crane Drive)	All	ISO* AGMA	VG68 2EP	VG150 4EP	VG220 5EP

∗ Kinetic Viscosity (mm²/s) at ISO 40℃

Note 1. When the ambient temperature is lower than -10 deg or higher than +50 deg, a heating or cooling unit is necessary, in general.

2. PARAMAX DRIVE is shipped without lubrication oil.
Supply oil within the range shown on the dip stick before operation.

Recommended Lubricants

	Brand	BP	CASTROL			CHEVRON TEXACO		EXXON MOBIL		SHELL	TOTAL
Gear Oil	ISO VG68 AGMA 2EP	ENERGOL GR-XP-68	ALPHA SP68	OPTIGEAR BM68	TRIBOL 1100/68	GEAR COMPOUNDS EP68	MEROPA WM68	SPARTAN EP68	MOBIL-GEAR 626	Shell Omala S2 G 68	CARTER EP68
Gear Oil	ISO VG100 AGMA 3EP	ENERGOL GR-XP-100	ALPHA SP100	OPTIGEAR BM100	TRIBOL 1100/100	GEAR COMPOUNDS EP100	MEROPA WM100	SPARTAN EP100	MOBIL-GEAR 627	Shell Omala S2 G 100	CARTER EP100
Gear Oil	ISO VG150 AGMA 4EP	ENERGOL GR-XP-150	ALPHA SP150	OPTIGEAR BM150	TRIBOL 1100/150	GEAR COMPOUNDS EP150	MEROPA WM150	SPARTAN EP150	MOBIL-GEAR 629	Shell Omala S2 G 150	CARTER EP150
Gear Oil	ISO VG220 AGMA 5EP	ENERGOL GR-XP-220	ALPHA SP220	OPTIGEAR BM220	TRIBOL 1100/220	GEAR COMPOUNDS EP220	MEROPA WM220	SPARTAN EP220	MOBIL-GEAR 630	Shell Omala S2 G 220	CARTER EP220
Gear Oil	ISO VG320 AGMA 6EP	ENERGOL GR-XP-320	ALPHA SP320	OPTIGEAR BM320	TRIBOL 1100/320	GEAR COMPOUNDS EP320	MEROPA WM320	SPARTAN EP320	MOBIL-GEAR 632	Shell Omala S2 G 320	CARTER EP320
	Bearing grease	ENER-GREASE LS EP2	SPHEEROL AP3	Olista Long-time 3EP	TRIBOL 3020/ 1000-2	DURALITH GREASE 68	MULTI-FAK EP2	BEACON EP2	MOBIL-PLEX 48	Shell Gadus S2 V 220 2	MULTIS EP2

Installation

(1) Consult us when PARAMAX DRIVE is to be installed on an inclined surface or on a ceiling.
Additional lubrication system may be necessary.

(2) Install PARAMAX DRIVE horizontally on a sufficiently rigid base.
When the unit is made for inclined installation according to your specification, do not install it at any other angle other than the specified angle.

(3) Installation bolts for PARAMAX DRIVE shall be equivalent to JIS strength classification 10.9.
Consult us when the force that pushes up PARAMAX DRIVE is to be applied.

(4) Refer to the maintenance manual attached to the unit for other installation notes.

TECHNICAL DATA Painting Specifications, Rust Proof Standard

Painting Specifications

Painting Area	Surface Conditioning	Kind of Painting		Painting Specification of				Application
		Class	Painting of Finish Coat	Type	Coating	Thickness μ	Type of Coating	
Outside Painting	Cast Iron Class 1	Standard painting	Acrylic modified phthalic	Under	1	20 ～ 40	Modified alkyd resin	Standard under coat
				Finish	1	15 ～ 30	Acrylic modified alkyd resin	Standard finish coat
		Standard export painting	Acrylic modified phthalic	Under	2	40 ～ 80	Modified alkyd resin	Export standard
				Finish	1	15 ～ 30	Acrylic modified alkyd resin	
		Special painting (Including rust-proof and heat resisting painting) One layer of Unigrand PTC Primer as the first primer	Acrylic modified phthalic	Under	2	40 ～ 80	Modified alkyd resin	Moderate corrosive atmosphere, seaside, outdoor humid atmosphere, chemical plant area, ... etc.
				Finish	2	30 ～ 60	Acrylic modified alkyd resin	
			Long of oil phthalic	Under	2	40 ～ 80	Modified alkyd resin	Ocean-going vessel & boat, bridge, seaside, outdoor humid atmosphere, ... etc.
				Finish	2	30 ～ 60	Synthetics resin paint	
			Chloride rubber	Under	2	40 ～ 80	Modified alkyd resin	Ocean-going vessel & boat, bridge, seaside, outdoor humid atmosphere, ... etc.
				Second	1	20 ～ 40	Phenol M.I.O paint	
				Finish	2	30 ～ 60	Chloride rubber paint	
			Phenol	Under	2	40 ～ 80	Modified alkyd resin	In-and-outdoor of acid treating plant and chemical plant etc...
				Finish	2	30 ～ 60	Phenol resin enamel	
			Heat-proof silver	Under	1	20 ～ 40	Modified alkyd resin	Heating furnace (120 deg), ... etc.
				Finish	1	15 ～ 30	Aluminum paint	
	Steel Plate Class 2	Extra rust-proof painting	Epoxy	Under	2	40 ～ 80	Special permeability epoxy aluminium paint	Indoor anti-corrosion area, Chemical plant
				Finish	3	120 ～ 240	Polyamide epoxy	
			Polyurethane	Under	2	40 ～ 80	Special permeability epoxy aluminium paint	Outdoor anti-corrosion area, Chemical plant
				Finish	3	45 ～ 90	Polyisocianate urethane resin paint	
		Extra rust-proof painting (Sand blast under coating)	Thick film epoxy		5	250 ～ 350	Thick film type modified epoxy resin paint	Submersible equipment, marine structure, ... etc.
Inside Painting	Cast Iron Class 1 Steel Plate Class 3	Standard painting			1	20 ～ 40	Modified alkyd resin	Standard inside painting

Note : SUMITOMO standard color is Donau Blue (equivalent Munsell color: 6.5PB 3.6 / 8.2)

Rust Proof Standard

Rust proofing treatment has been conducted on all completely assembled models, prior to shipment.

1. Standard rust proofing specifications

(1) Outside rust proofing

Rust proofing oil has been applied to products before shipment.

Check the rust proofing conditions every 6 months after shipment, and conduct rust proofing treatment, as necessary.

Rust proofing period	6 months
Storage condition	Generally to be stored inside the shop or warehouse, relatively free of humidity, dust, extreme temperature fluctuation, corrosive gas, and similar atmosphere. After shipment, the product shall be operated 5-10 minutes every 2-3 months with recommended lubricants.

2. Export rust proofing specifications

Consult us for export rust proofing when export specifications or severe specifications are required.

TECHNICAL DATA Moment of Inertia Right Angle Shaft

Right Angle Shaft Double Reduction

Moment of Inertia at high speed shaft

Nominal reduction ratio	Size of Reducer													
	9015	9025	9030	9035	9040	9045	9050	9055	9060	9065	9070	9075	9080	9085
6.3	0.00423	0.00805	0.0157		0.0333		0.0662		0.146		0.301		0.502	
7.1	0.00400	0.00750	0.0153		0.0313		0.0621		0.135		0.281		0.475	
8	0.00288	0.00508	0.0137	0.0181	0.0283	0.0374	0.0603	0.0745	0.130	0.166	0.253	0.337	0.480	0.562
9	0.00275	0.00475	0.0134	0.0175	0.0269	0.0346	0.0577	0.0681	0.124	0.149	0.242	0.311	0.464	0.524
10	0.00218	0.00488	0.0111	0.0152	0.0201	0.0311	0.0492	0.0653	0.0981	0.1426	0.203	0.274	0.398	0.516
11.2	0.00210	0.00468	0.0109	0.0149	0.0193	0.0292	0.0475	0.0614	0.0939	0.1319	0.196	0.259	0.387	0.493
12.5	0.00188	0.00390	0.00843	0.0120	0.0138	0.0217	0.0357	0.0525	0.0691	0.1056	0.139	0.216	0.268	0.422
14	0.00183	0.00375	0.00830	0.0118	0.0133	0.0206	0.0345	0.0499	0.0664	0.0990	0.135	0.207	0.261	0.407
16	0.00133	0.00258	0.00583	0.00908	0.0107	0.0149	0.0243	0.0379	0.0514	0.0739	0.102	0.147	0.194	0.282
18	0.00130	0.00250	0.00575	0.00890	0.0104	0.0142	0.0237	0.0362	0.0497	0.0697	0.0987	0.141	0.190	0.273
20				0.00620		0.0114		0.0257		0.0546		0.107		0.203
22.4				0.00610		0.0109		0.0246		0.0518		0.103		0.198

Right Angle Shaft Triple Reduction

Moment of Inertia at high speed shaft

Nominal reduction ratio	Size of Reducer													
	9015	9025	9030	9035	9040	9045	9050	9055	9060	9065	9070	9075	9080	9085
20			0.00378		0.00693		0.0140		0.0289		0.0590		0.121	
22.4			0.00373		0.00670		0.0136		0.0278		0.0571		0.118	
25			0.00338	0.00403	0.00608	0.00735	0.0115	0.0149	0.0237	0.0310	0.0515	0.0624	0.106	0.126
28			0.00333	0.00395	0.00595	0.00705	0.0112	0.0142	0.0230	0.0292	0.0503	0.0600	0.104	0.123
31.5			0.00193	0.00353	0.00433	0.00635	0.00835	0.0120	0.0183	0.0248	0.0359	0.0537	0.0700	0.110
35.5			0.00190	0.00350	0.00425	0.00618	0.00818	0.0116	0.0178	0.0238	0.0351	0.0521	0.0689	0.108
40			0.00178	0.00203	0.00403	0.00450	0.00738	0.00868	0.0161	0.0191	0.0328	0.0373	0.0644	0.0722
45			0.00175	0.00200	0.00398	0.00440	0.00730	0.00843	0.0159	0.0184	0.0323	0.0363	0.0636	0.0708
50			0.00118	0.00183	0.00233	0.00413	0.00555	0.00758	0.0120	0.0166	0.0239	0.0337	0.0484	0.0659
56			0.00115	0.00183	0.00230	0.00405	0.00550	0.00743	0.0118	0.0162	0.0236	0.0331	0.0479	0.0649
63			0.00110	0.00120	0.00220	0.00240	0.00423	0.00568	0.00893	0.01230	0.0173	0.0245	0.0349	0.0493
71			0.00110	0.00120	0.00218	0.00235	0.00418	0.00558	0.00883	0.01203	0.0171	0.0241	0.0346	0.0487
80				0.00113		0.00225		0.00430		0.00910		0.0176		0.0355
90				0.00113		0.00223		0.00423		0.00895		0.0174		0.0351
100														

Right Angle Shaft Quadruple Reduction

Moment of Inertia at high speed shaft

Nominal reduction ratio	Size of Reducer													
	9015	9025	9030	9035	9040	9045	9050	9055	9060	9065	9070	9075	9080	9085
63														
71														
80					0.00295		0.00283		0.00553		0.0113		0.0229	
90					0.00293		0.00280		0.00548		0.0112		0.0227	
100					0.00215	0.00298	0.00268	0.00288	0.00523	0.00565	0.0108	0.0115	0.0219	0.0233
112					0.00215	0.00295	0.00265	0.00283	0.00518	0.00555	0.0107	0.0114	0.0218	0.0230
125					0.00203	0.00218	0.00243	0.00270	0.00473	0.00530	0.00923	0.0110	0.0188	0.0222
140					0.00203	0.00215	0.00243	0.00268	0.00470	0.00523	0.00918	0.0109	0.0188	0.0220
160						0.00205	0.00120	0.00245	0.00243	0.00475	0.00480	0.00930	0.00993	0.0190
180						0.00203	0.00120	0.00243	0.00240	0.00473	0.00478	0.00925	0.00990	0.0189
200							0.00118	0.00123	0.00235	0.00245	0.00468		0.00970	0.0100
224							0.00118	0.00120	0.00233	0.00243	0.00465	0.00483	0.00968	0.0100
250							0.00110	0.00118	0.00223	0.00235	0.00428	0.00473	0.00893	0.00978
280							0.00110	0.00118	0.00220	0.00235	0.00425	0.00470	0.00893	0.00973
315							0.00110	0.00113	0.00220	0.00223	0.00420	0.00430	0.00885	0.00898
355							0.00108	0.00110	0.00215	0.00223	0.00418	0.00428	0.00868	0.00895
400								0.00110		0.00220		0.00423		0.00885
450								0.00108		0.00218		0.00418		0.00868
500														

TECHNICAL DATA Moment of Inertia Right Angle Shaft

Unit: kg-m^2

Size of Reducer												Nominal reduction ratio
9090	**9095**	**9100**	**9105**	**9110**	**9115**	**9118**	**9121**	**9126**	**9128**	**9131**	**9136**	
												6.3
												7.1
												8
	1.18		2.23		4.16							**9**
	1.16		2.20		3.98							**10**
	0.871		1.68		3.10							**11.2**
	0.858		1.65		2.99							**12.5**
	0.638		1.22		2.28							**14**
	0.630		1.20		2.21							**16**
	0.464		0.894		1.68							**18**
	0.459		0.884		1.63							**20**
												22.4

Unit: kg-m^2

Size of Reducer												Nominal reduction ratio
9090	**9095**	**9100**	**9105**	**9110**	**9115**	**9118**	**9121**	**9126**	**9128**	**9131**	**9136**	
0.240		0.460		0.889								**20**
0.237	0.249	0.453	0.476	0.866	0.926							**22.4**
0.212	0.245	0.401	0.470	0.774	0.896	0.959						**25**
0.210	0.218	0.397	0.412	0.759	0.798		2.18	2.21		4.48	4.53	**28**
0.141	0.215	0.264	0.408	0.454	0.779	0.701	2.12	2.15		4.24	4.28	**31.5**
0.140	0.144	0.262	0.271	0.445	0.468	0.731	1.29	1.31	2.39	3.31	3.34	**35.5**
0.129	0.143	0.241	0.268	0.409	0.456	0.615	1.25	1.27	2.33	3.16	3.18	**40**
0.129	0.132	0.239	0.245	0.403	0.418	0.559	0.939	0.952	1.78	2.41	2.43	**45**
0.0931	0.131	0.175	0.244	0.311	0.411	0.443	0.917	0.928	1.74	2.32	2.33	**50**
0.0927	0.0945	0.174	0.178	0.307	0.317	0.408	0.683	0.691	1.28	1.76	1.77	**56**
0.0664	0.0940	0.127	0.177	0.225	0.312	0.322	0.668	0.675	1.26	1.70	1.71	**63**
0.0661	0.0673	0.126	0.129	0.223	0.229	0.300	0.509	0.515	0.934			**71**
0.0642	0.0669	0.121	0.128	0.211	0.226	0.232	0.500	0.505	0.919			**80**
	0.0648		0.123		0.214	0.218						**90**
												100

Unit: kg-m^2

Size of Reducer												Nominal reduction ratio
9090	**9095**	**9100**	**9105**	**9110**	**9115**	**9118**	**9121**	**9126**	**9128**	**9131**	**9136**	
												63
										0.979	0.987	**71**
										0.819	0.825	**80**
0.0467		0.0962		0.108			0.235	0.238	0.502	0.713	0.718	**90**
0.0452	0.0472	0.0930	0.0972	0.102	0.110	0.139	0.230	0.233	0.492	0.688	0.692	**100**
0.0451	0.0455	0.0927	0.0937	0.101	0.104	0.123	0.199	0.201	0.429	0.505	0.508	**112**
0.0409	0.0454	0.0846	0.0934	0.0908	0.102	0.105	0.196	0.198	0.423	0.489	0.492	**125**
0.0408	0.0411	0.0844	0.0850	0.0902	0.0918	0.100	0.152	0.154	0.281	0.448	0.450	**140**
0.0243	0.0410	0.0493	0.0849	0.0527	0.0910	0.0927	0.150	0.151	0.277	0.438	0.439	**160**
0.0242	0.0244	0.0492	0.0496	0.0523	0.0533	0.0890	0.137	0.138	0.252	0.326	0.327	**180**
0.0183	0.0244	0.0370	0.0495	0.0393	0.0528	0.0693	0.136	0.136	0.250	0.319	0.320	**200**
0.0183	0.0184	0.0369	0.0371	0.0391	0.0397	0.0544	0.0978	0.0983	0.143	0.234	0.235	**224**
0.0172	0.0183	0.0349	0.0371	0.0364	0.0394	0.0516	0.0969	0.0974	0.141	0.230	0.231	**250**
0.0172	0.0172	0.0348	0.0350	0.0363	0.0367	0.0501	0.0693	0.0696	0.131	0.217	0.217	**280**
0.0171	0.0172	0.0345	0.0350	0.0355	0.0365	0.0477	0.0688	0.0690	0.130			**315**
0.0163	0.0171	0.0334	0.0346	0.0341	0.0357	0.0360	0.0664	0.0667	0.125			**355**
	0.0164		0.0334		0.0343	0.0345						**400**
												450
												500

TECHNICAL DATA GD^2 Right Angle Shaft

Right Angle Shaft Double Reduction

GD^2 at high speed shaft

Nominal reduction ratio	Size of Reducer													
	9015	9025	9030	9035	9040	9045	9050	9055	9060	9065	9070	9075	9080	9085
6.3	0.0169	0.0322	0.0629		0.133		0.265		0.584		1.20		2.01	
7.1	0.0160	0.0300	0.0610		0.125		0.248		0.541		1.13		1.90	
8	0.0115	0.0203	0.0548	0.0723	0.113	0.150	0.241	0.298	0.522	0.663	1.01	1.35	1.92	2.25
9	0.0110	0.0190	0.0536	0.0699	0.108	0.138	0.231	0.272	0.495	0.594	0.968	1.24	1.86	2.10
10	0.0087	0.0195	0.0443	0.0609	0.0805	0.1242	0.197	0.261	0.392	0.570	0.812	1.10	1.59	2.06
11.2	0.0084	0.0187	0.0436	0.0594	0.0772	0.1167	0.190	0.246	0.376	0.528	0.783	1.04	1.55	1.97
12.5	0.0075	0.0156	0.0337	0.0481	0.0553	0.0869	0.143	0.210	0.276	0.423	0.556	0.865	1.07	1.69
14	0.0073	0.0150	0.0332	0.0472	0.0532	0.0825	0.138	0.200	0.266	0.396	0.538	0.827	1.04	1.63
16	0.0053	0.0103	0.0233	0.0363	0.0428	0.0594	0.0972	0.152	0.206	0.296	0.407	0.590	0.777	1.13
18	0.0052	0.0100	0.0230	0.0356	0.0414	0.0566	0.0946	0.145	0.199	0.279	0.395	0.566	0.759	1.09
20				0.0248		0.0455		0.103		0.218		0.429		0.814
22.4				0.0244		0.0437		0.0985		0.207		0.413		0.790

Right Angle Shaft Triple Reduction

GD^2 at high speed shaft

Nominal reduction ratio	Size of Reducer													
	9015	9025	9030	9035	9040	9045	9050	9055	9060	9065	9070	9075	9080	9085
20			0.0151		0.0277		0.0559		0.116		0.236		0.482	
22.4			0.0149		0.0268		0.0542		0.111		0.229		0.471	
25			0.0135	0.0161	0.0243	0.0294	0.0459	0.0594	0.0946	0.1238	0.206	0.250	0.425	0.505
28			0.0133	0.0158	0.0238	0.0282	0.0449	0.0567	0.0919	0.1167	0.201	0.240	0.418	0.491
31.5			0.0077	0.0141	0.0173	0.0254	0.0334	0.0479	0.0730	0.0993	0.144	0.215	0.280	0.440
35.5			0.0076	0.0140	0.0170	0.0247	0.0327	0.0464	0.0712	0.0952	0.141	0.208	0.276	0.431
40			0.0071	0.0081	0.0161	0.0180	0.0295	0.0347	0.0645	0.0764	0.131	0.149	0.257	0.289
45			0.0070	0.0080	0.0159	0.0176	0.0292	0.0337	0.0635	0.0735	0.129	0.145	0.255	0.283
50			0.0047	0.0073	0.0093	0.0165	0.0222	0.0303	0.0480	0.0665	0.0957	0.135	0.193	0.264
56			0.0046	0.0073	0.0092	0.0162	0.0220	0.0297	0.0473	0.0648	0.0945	0.132	0.192	0.260
63			0.0044	0.0048	0.0088	0.0096	0.0169	0.0227	0.0357	0.0492	0.0690	0.0979	0.140	0.197
71			0.0044	0.0048	0.0087	0.0094	0.0167	0.0223	0.0353	0.0481	0.0682	0.0963	0.139	0.195
80				0.0045		0.0090		0.0172		0.0364		0.0704		0.142
90				0.0045		0.0089		0.0169		0.0358		0.0694		0.141
100														

Right Angle Shaft Quadruple Reduction

GD^2 at high speed shaft

Nominal reduction ratio	Size of Reducer													
	9015	9025	9030	9035	9040	9045	9050	9055	9060	9065	9070	9075	9080	9085
63														
71														
80					0.0118		0.0113		0.0221		0.0452		0.0914	
90					0.0117		0.0112		0.0219		0.0447		0.0907	
100					0.0086	0.0119	0.0107	0.0115	0.0209	0.0226	0.0432	0.0461	0.0877	0.0930
112					0.0086	0.0118	0.0106	0.0113	0.0207	0.0222	0.0429	0.0455	0.0872	0.0920
125					0.0081	0.0087	0.0097	0.0108	0.0189	0.0212	0.0369	0.0438	0.0753	0.0887
140					0.0081	0.0086	0.0097	0.0107	0.0188	0.0209	0.0367	0.0434	0.0751	0.0881
160						0.0082	0.0048	0.0098	0.0097	0.0190	0.0192	0.0372	0.0397	0.0759
180						0.0081	0.0048	0.0097	0.0096	0.0189	0.0191	0.0370	0.0396	0.0756
200							0.0047	0.0049	0.0094	0.0098	0.0187	0.0195	0.0388	0.0401
224							0.0047	0.0048	0.0093	0.0097	0.0186	0.0193	0.0387	0.0399
250							0.0044	0.0047	0.0089	0.0094	0.0171	0.0189	0.0357	0.0391
280							0.0044	0.0047	0.0088	0.0094	0.0170	0.0188	0.0357	0.0389
315							0.0044	0.0045	0.0088	0.0089	0.0168	0.0172	0.0354	0.0359
355							0.0043	0.0044	0.0086	0.0089	0.0167	0.0171	0.0347	0.0358
400								0.0044		0.0088		0.0169		0.0354
450								0.0043		0.0087		0.0167		0.0347
500														

TECHNICAL DATA GD^2 Right Angle Shaft

Unit: kgf-m^2

Size of Reducer												Nominal reduction ratio
9090	9095	9100	9105	9110	9115	9118	9121	9126	9128	9131	9136	
												6.3
												7.1
												8
	4.72		8.94		16.6							**9**
	4.63		8.78		15.9							**10**
	3.48		6.70		12.4							**11.2**
	3.43		6.61		12.0							**12.5**
	2.55		4.88		9.14							**14**
	2.52		4.82		8.85							**16**
	1.86		3.57		6.71							**18**
	1.84		3.54		6.53							**20**
												22.4

Unit: kgf-m^2

Size of Reducer												Nominal reduction ratio
9090	9095	9100	9105	9110	9115	9118	9121	9126	9128	9131	9136	
0.960		1.84		3.56								**20**
0.949	0.994	1.81	1.91	3.47	3.70							**22.4**
0.848	0.981	1.60	1.88	3.10	3.59	3.84						**25**
0.842	0.870	1.59	1.65	3.04	3.19		8.71	8.84		17.9	18.1	**28**
0.563	0.862	1.06	1.63	1.81	3.12	2.80	8.48	8.59		17.0	17.1	**31.5**
0.559	0.578	1.05	1.08	1.78	1.87	2.92	5.16	5.24	9.58	13.2	13.4	**35.5**
0.518	0.572	0.964	1.07	1.64	1.83	2.46	5.01	5.08	9.34	12.6	12.7	**40**
0.515	0.527	0.958	0.982	1.61	1.67	2.24	3.76	3.81	7.10	9.65	9.73	**45**
0.372	0.523	0.699	0.975	1.24	1.64	1.77	3.67	3.71	6.95	9.27	9.33	**50**
0.371	0.378	0.695	0.710	1.23	1.27	1.63	2.73	2.76	5.13	7.04	7.09	**56**
0.266	0.760	0.507	0.706	0.900	1.25	1.29	2.67	2.70	5.03	6.79	6.83	**63**
0.265	0.269	0.505	0.514	0.890	0.915	1.20	2.04	2.06	3.73			**71**
0.257	0.268	0.485	0.512	0.845	0.903	0.928	2.00	2.02	3.67			**80**
	0.259		0.491		0.854	0.872						**90**
												100

Unit: kgf-m^2

Size of Reducer												Nominal reduction ratio
9090	9095	9100	9105	9110	9115	9118	9121	9126	9128	9131	9136	
												63
										3.91	3.95	**71**
										3.28	3.30	**80**
0.187		0.385		0.431			0.941	0.954	2.01	2.85	2.87	**90**
0.181	0.189	0.372	0.389	0.409	0.439	0.554	0.920	0.930	1.97	2.75	2.77	**100**
0.180	0.182	0.371	0.375	0.405	0.415	0.490	0.797	0.805	1.72	2.02	2.03	**112**
0.163	0.182	0.338	0.374	0.363	0.410	0.420	0.784	0.790	1.69	1.96	1.97	**125**
0.163	0.164	0.338	0.340	0.361	0.367	0.398	0.609	0.614	1.12	1.79	1.80	**140**
0.0970	0.164	0.197	0.339	0.211	0.364	0.371	0.600	0.605	1.11	1.75	1.76	**160**
0.0969	0.0976	0.197	0.198	0.209	0.213	0.356	0.548	0.552	1.01	1.30	1.31	**180**
0.0731	0.0974	0.148	0.198	0.157	0.211	0.277	0.542	0.545	0.998	1.28	1.28	**200**
0.0730	0.0734	0.148	0.149	0.156	0.159	0.217	0.391	0.393	0.571	0.936	0.940	**224**
0.0687	0.0733	0.140	0.148	0.146	0.157	0.206	0.388	0.389	0.565	0.920	0.923	**250**
0.0687	0.0689	0.139	0.140	0.145	0.147	0.200	0.277	0.279	0.525	0.867	0.868	**280**
0.0682	0.0689	0.138	0.140	0.142	0.146	0.191	0.275	0.276	0.521			**315**
0.0653	0.0683	0.133	0.138	0.137	0.143	0.144	0.266	0.267	0.498			**355**
	0.0654		0.134		0.137	0.138						**400**
												450
												500

TECHNICAL DATA Moment of Inertia Parallel shaft

Parallel Shaft Double Reduction

Moment of Inertia at high speed shaft

Nominal reduction ratio	Size of Reducer													
	9015	9025	9030	9035	9040	9045	9050	9055	9060	9065	9070	9075	9080	9085
6.3	0.00238	0.00508	0.0110		0.0211		0.0416		0.109		0.226		0.447	
7.1	0.00215	0.00455	0.0105		0.0188		0.0376		0.0977		0.207		0.420	
8	0.00185	0.00433	0.00913	0.0135	0.0158	0.0257	0.0336	0.0496	0.0787	0.128	0.167	0.262	0.326	0.502
9	0.00170	0.00398	0.00880	0.0129	0.0144	0.0226	0.0309	0.0434	0.0721	0.111	0.155	0.236	0.309	0.466
10	0.00133	0.00305	0.00718	0.0107	0.0136	0.0186	0.0267	0.0389	0.0619	0.0909	0.132	0.188	0.256	0.360
11.2	0.00125	0.00283	0.00698	0.0103	0.0126	0.0167	0.0251	0.0348	0.0576	0.0803	0.124	0.173	0.245	0.337
12.5	0.00100	0.00218	0.00463	0.00820	0.00933	0.0154	0.0210	0.0300	0.0443	0.0699	0.0898	0.147	0.165	0.279
14	0.00095	0.00205	0.00450	0.00795	0.00878	0.0142	0.0200	0.0275	0.0415	0.0629	0.0851	0.136	0.158	0.264
16	0.00078	0.00173	0.00365	0.00523	0.00725	0.0104	0.0149	0.0232	0.0312	0.0493	0.0708	0.0984	0.129	0.179
18	0.00073	0.00163	0.00355	0.00508	0.00690	0.00965	0.0142	0.0215	0.0296	0.0449	0.0678	0.0922	0.124	0.169
20				0.00403		0.00795		0.0161		0.0342		0.0764		0.138
22.4				0.00393		0.00748		0.0151		0.0316		0.0724		0.132

Parallel Shaft Triple Reduction

Moment of Inertia at high speed shaft

Nominal reduction ratio	Size of Reducer													
	9015	9025	9030	9035	9040	9045	9050	9055	9060	9065	9070	9075	9080	9085
20	0.00085	0.00210	0.00288		0.00558		0.0135		0.0303		0.0588		0.121	
22.4	0.00083	0.00205	0.00280		0.00538		0.0131		0.0291		0.0570		0.118	
25	0.00073	0.00190	0.00248	0.00310	0.00478	0.00600	0.0109	0.0144	0.0249	0.0324	0.0514	0.0622	0.106	0.127
28	0.00073	0.00188	0.00245	0.00305	0.00463	0.00573	0.0107	0.0137	0.0242	0.0306	0.0502	0.0598	0.104	0.123
31.5	0.00048	0.00115	0.00153	0.00263	0.00335	0.00505	0.00763	0.0115	0.0164	0.0261	0.0317	0.0536	0.0690	0.110
35.5	0.00048	0.00115	0.00153	0.00260	0.00328	0.00485	0.00743	0.0111	0.0159	0.0251	0.0309	0.0520	0.0679	0.108
40	0.00043	0.00108	0.00138	0.00163	0.00303	0.00353	0.00658	0.00798	0.0142	0.0172	0.0287	0.0331	0.0632	0.0714
45	0.00043	0.00108	0.00138	0.00160	0.00298	0.00343	0.00648	0.00770	0.0140	0.0165	0.0282	0.0321	0.0624	0.0699
50			0.00090	0.00145	0.00190	0.00315	0.00433	0.00680	0.00868	0.0147	0.0175	0.0296	0.0347	0.0648
56			0.00088	0.00143	0.00188	0.00308	0.00425	0.00663	0.00850	0.0143	0.0172	0.0289	0.0343	0.0637
63			0.00083	0.00093	0.00178	0.00198	0.00393	0.00448	0.00788	0.00900	0.0164	0.0180	0.0325	0.0356
71			0.00083	0.00093	0.00175	0.00193	0.00390	0.00435	0.00778	0.00873	0.0162	0.0177	0.0323	0.0350
80				0.00085		0.00183		0.00400		0.00805		0.0167		0.0331
90				0.00085		0.00180		0.00395		0.00790		0.0165		0.0328

Parallel Shaft Quadruple Reduction

Moment of Inertia at high speed shaft

Nominal reduction ratio	Size of Reducer													
	9015	9025	9030	9035	9040	9045	9050	9055	9060	9065	9070	9075	9080	9085
63														
71														
80			0.00078		0.00200		0.00278		0.00618		0.0124		0.0248	
90			0.00078		0.00200		0.00275		0.00610		0.0123		0.0246	
100			0.00075	0.00080	0.00195	0.00203	0.00263	0.00283	0.00585	0.00630	0.0119	0.0126	0.0238	0.0252
112			0.00075	0.00078	0.00195	0.00200	0.00260	0.00278	0.00580	0.00620	0.0118	0.0125	0.0237	0.0249
125			0.00068	0.00075	0.00183	0.00198	0.00238	0.00265	0.00533	0.00593	0.0103	0.0121	0.0207	0.0241
140			0.00068	0.00075	0.00183	0.00195	0.00238	0.00263	0.00530	0.00585	0.0103	0.0120	0.0207	0.0239
160			0.00043	0.00068	0.00110	0.00185	0.00103	0.00240	0.00220	0.00538	0.00493	0.0104	0.00883	0.0209
180			0.00043	0.00068	0.00110	0.00183	0.00103	0.00238	0.00218	0.00533	0.00490	0.0104	0.00878	0.0208
200			0.00040	0.00043	0.00105	0.00110	0.00098	0.00105	0.00213	0.00223	0.00480	0.00498	0.00860	0.00893
224			0.00040	0.00043	0.00105	0.00110	0.00098	0.00103	0.00210	0.00220	0.00478	0.00495	0.00858	0.00888
250				0.00040		0.00105	0.00093	0.00100	0.00200	0.00213	0.00440	0.00483	0.00783	0.00865
280				0.00040		0.00105	0.00093	0.00100	0.00198	0.00213	0.00438	0.00480	0.00780	0.00863
315							0.00093	0.00093	0.00198	0.00200	0.00433	0.00440	0.00773	0.00785
355							0.00088	0.00093	0.00193	0.00200	0.00430	0.00440	0.00755	0.00783
400							0.00080	0.00093	0.00163	0.00198	0.00353	0.00435	0.00685	0.00775
450								0.00090		0.00193		0.00430		0.00758
500								0.00080		0.00165		0.00353		0.00685

TECHNICAL DATA Moment of Inertia Parallel shaft

Unit: kg-m^2

Size of Reducer												Nominal reduction ratio
9090	**9095**	**9100**	**9105**	**9110**	**9115**	**9118**	**9121**	**9126**	**9128**	**9131**	**9136**	
0.865		1.78		3.33								**6.3**
0.840	0.950	1.72	1.95	3.10	3.70							**7.1**
0.693	0.918	1.32	1.89	2.48	3.40							**8**
0.675	0.748	1.28	1.42	2.34	2.70							**9**
0.490	0.725	1.02	1.39	1.91	2.53							**10**
0.480	0.523	0.990	1.09	1.81	2.05							**11.2**
0.323	0.510	0.658	1.06	1.29	1.94							**12.5**
0.318	0.345	0.640	0.700	1.23	1.38							**14**
0.253	0.338	0.510	0.683	1.01	1.31							**16**
0.250	0.268	0.500	0.538	0.968	1.06							**18**
	0.263		0.528		1.02							**20**
												22.4

Unit: kg-m^2

Size of Reducer												Nominal reduction ratio
9090	**9095**	**9100**	**9105**	**9110**	**9115**	**9118**	**9121**	**9126**	**9128**	**9131**	**9136**	
0.239		0.508		0.720								**20**
0.237	0.248	0.500	0.523	0.698	0.755					4.58	4.66	**22.4**
0.212	0.245	0.450	0.518	0.610	0.728	0.787				4.19	4.25	**25**
0.210	0.217	0.445	0.460	0.595	0.633		1.20	1.23	2.34	3.36	3.41	**28**
0.139	0.215	0.300	0.458	0.398	0.615	0.654	1.15	1.17	2.24	3.13	3.16	**31.5**
0.138	0.143	0.298	0.308	0.388	0.413	0.567	0.941	0.962	1.72	2.32	2.35	**35.5**
0.128	0.142	0.275	0.305	0.350	0.400	0.426	0.906	0.923	1.65	2.16	2.18	**40**
0.127	0.130	0.275	0.280	0.345	0.360	0.418	0.630	0.643	1.14	1.73	1.75	**45**
0.0695	0.129	0.138	0.278	0.178	0.353	0.370	0.609	0.619	1.10	1.63	1.65	**50**
0.0693	0.0710	0.137	0.141	0.174	0.184	0.333	0.486	0.494	0.810	1.34	1.36	**56**
0.0653	0.0705	0.128	0.140	0.159	0.179	0.216	0.473	0.479	0.786	1.28	1.29	**63**
0.0650	0.0660	0.127	0.130	0.157	0.163	0.194	0.367	0.372	0.626	1.02	1.03	**71**
0.0630	0.0658	0.122	0.129	0.145	0.160	0.166	0.358	0.362	0.610			**80**
	0.0638		0.124		0.147	0.152	0.309	0.312	0.491			**90**

Unit: kg-m^2

Size of Reducer												Nominal reduction ratio
9090	**9095**	**9100**	**9105**	**9110**	**9115**	**9118**	**9121**	**9126**	**9128**	**9131**	**9136**	
												63
												71
										0.713	0.719	**80**
0.0675		0.108		0.123						0.611	0.616	**90**
0.0658	0.0680	0.105	0.109	0.118	0.125	0.147	0.250	0.253	0.517	0.588	0.592	**100**
0.0658	0.0663	0.105	0.106	0.117	0.119	0.138	0.221	0.223	0.447	0.525	0.528	**112**
0.0613	0.0660	0.0963	0.105	0.106	0.118	0.121	0.218	0.219	0.441	0.469	0.471	**125**
0.0613	0.0615	0.0963	0.0968	0.106	0.107	0.115	0.199	0.200	0.291	0.368	0.371	**140**
0.0193	0.0615	0.0398	0.0965	0.0678	0.107	0.108	0.189	0.190	0.287	0.331	0.332	**160**
0.0193	0.0194	0.0395	0.0400	0.0673	0.0683	0.105	0.164	0.165	0.261	0.260	0.261	**180**
0.0189	0.0194	0.0388	0.0398	0.0425	0.0678	0.0688	0.158	0.159	0.258	0.237	0.238	**200**
0.0189	0.0190	0.0388	0.0390	0.0423	0.0428	0.0665	0.113	0.114	0.158	0.232	0.233	**224**
0.0178	0.0189	0.0368	0.0390	0.0398	0.0425	0.0431	0.110	0.110	0.156	0.171	0.172	**250**
0.0178	0.0179	0.0368	0.0370	0.0395	0.0400	0.0621	0.0830	0.0833	0.146	0.168	0.169	**280**
0.0177	0.0179	0.0365	0.0368	0.0388	0.0398	0.0597	0.0805	0.0808	0.145	0.141	0.141	**315**
0.0170	0.0177	0.0353	0.0365	0.0375	0.0390	0.0392	0.0801	0.0803	0.112			**355**
0.0156	0.0170	0.0295	0.0355	0.0313	0.0375	0.0378	0.0626	0.0628	0.111			**400**
	0.0156		0.0295		0.0313	0.0315						**450**
												500

TECHNICAL DATA GD^2 Parallel shaft

Parallel Shaft Double Reduction

GD^2 at high speed shaft

Nominal reduction ratio	Size of Reducer													
	9015	9025	9030	9035	9040	9045	9050	9055	9060	9065	9070	9075	9080	9085
6.3	0.0095	0.0203	0.0440		0.0845		0.166		0.434		0.906		1.79	
7.1	0.0086	0.0182	0.0419		0.0753		0.150		0.391		0.830		1.68	
8	0.0074	0.0173	0.0365	0.0541	0.0633	0.1027	0.134	0.199	0.315	0.513	0.666	1.05	1.30	2.01
9	0.0068	0.0159	0.0352	0.0515	0.0577	0.0903	0.124	0.174	0.288	0.444	0.620	0.946	1.24	1.86
10	0.0053	0.0122	0.0287	0.0426	0.0542	0.0743	0.107	0.156	0.248	0.364	0.529	0.751	1.02	1.44
11.2	0.0050	0.0113	0.0279	0.0410	0.0505	0.0668	0.100	0.139	0.230	0.321	0.497	0.690	0.978	1.35
12.5	0.0040	0.0087	0.0185	0.0328	0.0373	0.0616	0.0841	0.120	0.177	0.280	0.359	0.587	0.658	1.12
14	0.0038	0.0082	0.0180	0.0318	0.0351	0.0566	0.0798	0.110	0.166	0.252	0.340	0.545	0.631	1.06
16	0.0031	0.0069	0.0146	0.0209	0.0290	0.0415	0.0594	0.0926	0.125	0.197	0.283	0.394	0.514	0.714
18	0.0029	0.0065	0.0142	0.0203	0.0276	0.0386	0.0569	0.0860	0.119	0.180	0.271	0.369	0.496	0.678
20				0.0161		0.0318		0.0643		0.137		0.305		0.552
22.4				0.0157		0.0299		0.0605		0.126		0.290		0.527

Parallel Shaft Triple Reduction

GD^2 at high speed shaft

Nominal reduction ratio	Size of Reducer													
	9015	9025	9030	9035	9040	9045	9050	9055	9060	9065	9070	9075	9080	9085
20	0.0034	0.0084	0.0115		0.0223		0.0539		0.121		0.235		0.483	
22.4	0.0033	0.0082	0.0112		0.0215		0.0522		0.117		0.228		0.472	
25	0.0029	0.0076	0.0099	0.0124	0.0191	0.0240	0.0437	0.0574	0.0996	0.130	0.206	0.249	0.425	0.507
28	0.0029	0.0075	0.0098	0.0122	0.0185	0.0229	0.0427	0.0547	0.0969	0.122	0.201	0.239	0.418	0.492
31.5	0.0019	0.0046	0.0061	0.0105	0.0134	0.0202	0.0305	0.0458	0.0655	0.105	0.127	0.214	0.276	0.441
35.5	0.0019	0.0046	0.0061	0.0104	0.0131	0.0194	0.0297	0.0442	0.0637	0.100	0.124	0.208	0.272	0.431
40	0.0017	0.0043	0.0055	0.0065	0.0121	0.0141	0.0263	0.0319	0.0568	0.0689	0.115	0.132	0.253	0.285
45	0.0017	0.0043	0.0055	0.0064	0.0119	0.0137	0.0259	0.0308	0.0558	0.0659	0.113	0.128	0.250	0.279
50			0.0036	0.0058	0.0076	0.0126	0.0173	0.0272	0.0347	0.0588	0.0700	0.118	0.139	0.259
56			0.0035	0.0057	0.0075	0.0123	0.0170	0.0265	0.0340	0.0571	0.0689	0.116	0.137	0.255
63			0.0033	0.0037	0.0071	0.0079	0.0157	0.0179	0.0315	0.0360	0.0655	0.0721	0.130	0.142
71			0.0033	0.0037	0.0070	0.0077	0.0156	0.0174	0.0311	0.0349	0.0647	0.0706	0.129	0.140
80				0.0034		0.0073		0.0160		0.0322		0.0668		0.133
90				0.0034		0.0072		0.0158		0.0316		0.0659		0.131

Parallel Shaft Quadruple Reduction

GD^2 at high speed shaft

Nominal reduction ratio	Size of Reducer													
	9015	9025	9030	9035	9040	9045	9050	9055	9060	9065	9070	9075	9080	9085
63														
71														
80			0.0031		0.0080		0.0111		0.0247		0.0496		0.0990	
90			0.0031		0.0080		0.0110		0.0244		0.0491		0.0983	
100			0.0030	0.0032	0.0078	0.0081	0.0105	0.0113	0.0234	0.0252	0.0476	0.0505	0.0953	0.101
112			0.0030	0.0031	0.0078	0.0080	0.0104	0.0111	0.0232	0.0248	0.0473	0.0499	0.0948	0.0996
125			0.0027	0.0030	0.0073	0.0079	0.0095	0.0106	0.0213	0.0237	0.0413	0.0482	0.0829	0.0963
140			0.0027	0.0030	0.0073	0.0078	0.0095	0.0105	0.0212	0.0234	0.0411	0.0478	0.0827	0.0957
160			0.0017	0.0027	0.0044	0.0074	0.0041	0.0096	0.0088	0.0215	0.0197	0.0416	0.0353	0.0835
180			0.0017	0.0027	0.0044	0.0073	0.0041	0.0095	0.0087	0.0213	0.0196	0.0414	0.0351	0.0832
200			0.0016	0.0017	0.0042	0.0044	0.0039	0.0042	0.0085	0.0089	0.0192	0.0199	0.0344	0.0357
224			0.0016	0.0017	0.0042	0.0044	0.0039	0.0041	0.0084	0.0088	0.0191	0.0198	0.0343	0.0355
250				0.0016		0.0042	0.0037	0.0040	0.0080	0.0085	0.0176	0.0193	0.0313	0.0346
280				0.0016		0.0042	0.0037	0.0040	0.0079	0.0085	0.0175	0.0192	0.0312	0.0345
315							0.0037	0.0037	0.0079	0.0080	0.0173	0.0176	0.0309	0.0314
355							0.0035	0.0037	0.0077	0.0080	0.0172	0.0176	0.0302	0.0313
400							0.0032	0.0037	0.0065	0.0079	0.0141	0.0174	0.0274	0.0310
450								0.0036		0.0077		0.0172		0.0303
500								0.0032		0.0066		0.0141		0.0274

TECHNICAL DATA GD^2 Parallel shaft

Unit: kgf-m^2

Size of Reducer												Nominal reduction ratio
9090	**9095**	**9100**	**9105**	**9110**	**9115**	**9118**	**9121**	**9126**	**9128**	**9131**	**9136**	
3.46		7.10		13.3								**6.3**
3.36	3.80	6.86	7.79	12.4	14.8							**7.1**
2.77	3.67	5.28	7.54	9.91	13.6							**8**
2.70	2.99	5.12	5.69	9.37	10.8							**9**
1.96	2.90	4.06	5.54	7.62	10.1							**10**
1.92	2.09	3.96	4.34	7.25	8.21							**11.2**
1.29	2.04	2.63	4.24	5.16	7.74							**12.5**
1.27	1.38	2.56	2.80	4.93	5.52							**14**
1.01	1.35	2.04	2.73	4.02	5.23							**16**
0.998	1.07	2.00	2.15	3.87	4.25							**18**
	1.05		2.11		4.06							**20**
												22.4

Unit: kgf-m^2

Size of Reducer												Nominal reduction ratio
9090	**9095**	**9100**	**9105**	**9110**	**9115**	**9118**	**9121**	**9126**	**9128**	**9131**	**9136**	
0.957		2.03		2.88								**20**
0.946	0.991	2.00	2.09	2.79	3.02					18.3	18.7	**22.4**
0.846	0.978	1.80	2.07	2.44	2.91	3.15				16.7	17.0	**25**
0.839	0.868	1.78	1.84	2.38	2.53		4.80	4.92	9.35	13.4	13.6	**28**
0.557	0.859	1.20	1.83	1.59	2.46	2.62	4.58	4.69	8.96	12.5	12.7	**31.5**
0.553	0.571	1.19	1.23	1.55	1.65	2.27	3.77	3.85	6.86	9.26	9.40	**35.5**
0.510	0.566	1.10	1.22	1.40	1.60	1.70	3.62	3.69	6.62	8.63	8.73	**40**
0.508	0.520	1.10	1.12	1.38	1.44	1.67	2.52	2.57	4.57	6.93	7.01	**45**
0.278	0.516	0.551	1.11	0.711	1.41	1.48	2.43	2.48	4.41	6.54	6.60	**50**
0.277	0.284	0.547	0.562	0.696	0.735	1.33	1.95	1.98	3.24	5.37	5.42	**56**
0.261	0.282	0.512	0.558	0.636	0.716	0.863	1.89	1.92	3.14	5.11	5.15	**63**
0.260	0.264	0.509	0.519	0.626	0.651	0.776	1.47	1.49	2.51	4.08	4.11	**71**
0.252	0.263	0.489	0.517	0.578	0.639	0.666	1.43	1.45	2.44			**80**
	0.255		0.495		0.587	0.607	1.24	1.25	1.96			**90**

Unit: kgf-m^2

Size of Reducer												Nominal reduction ratio
9090	**9095**	**9100**	**9105**	**9110**	**9115**	**9118**	**9121**	**9126**	**9128**	**9131**	**9136**	
												63
												71
										2.85	2.88	**80**
0.270		0.432		0.493						2.45	2.47	**90**
0.263	0.272	0.419	0.436	0.471	0.501	0.589	1.00	1.01	2.07	2.35	2.37	**100**
0.263	0.265	0.418	0.422	0.467	0.477	0.552	0.884	0.892	1.79	2.10	2.11	**112**
0.245	0.264	0.385	0.421	0.425	0.472	0.482	0.871	0.878	1.77	1.88	1.88	**125**
0.245	0.246	0.385	0.387	0.423	0.429	0.460	0.795	0.800	1.16	1.47	1.48	**140**
0.0771	0.246	0.159	0.386	0.271	0.426	0.433	0.758	0.762	1.15	1.32	1.33	**160**
0.0770	0.0777	0.158	0.160	0.269	0.273	0.418	0.657	0.661	1.04	1.04	1.04	**180**
0.0755	0.0775	0.155	0.159	0.170	0.271	0.275	0.632	0.634	1.03	0.948	0.952	**200**
0.0754	0.0758	0.155	0.156	0.169	0.171	0.266	0.454	0.455	0.631	0.930	0.933	**224**
0.0713	0.0757	0.147	0.156	0.159	0.170	0.173	0.438	0.440	0.625	0.685	0.688	**250**
0.0712	0.0715	0.147	0.148	0.158	0.160	0.249	0.332	0.333	0.583	0.673	0.675	**280**
0.0707	0.0714	0.146	0.147	0.155	0.159	0.239	0.322	0.323	0.579	0.562	0.564	**315**
0.0680	0.0709	0.141	0.146	0.150	0.156	0.157	0.320	0.321	0.448			**355**
0.0622	0.0681	0.118	0.142	0.125	0.150	0.151	0.251	0.251	0.445			**400**
	0.0623		0.118		0.125	0.126						**450**
												500

TECHNICAL DATA Supplementary Dimension Drawing

9015▶9055 / Right Angle Double, Triple / Parallel double / Horizontal, Vertical, Upright

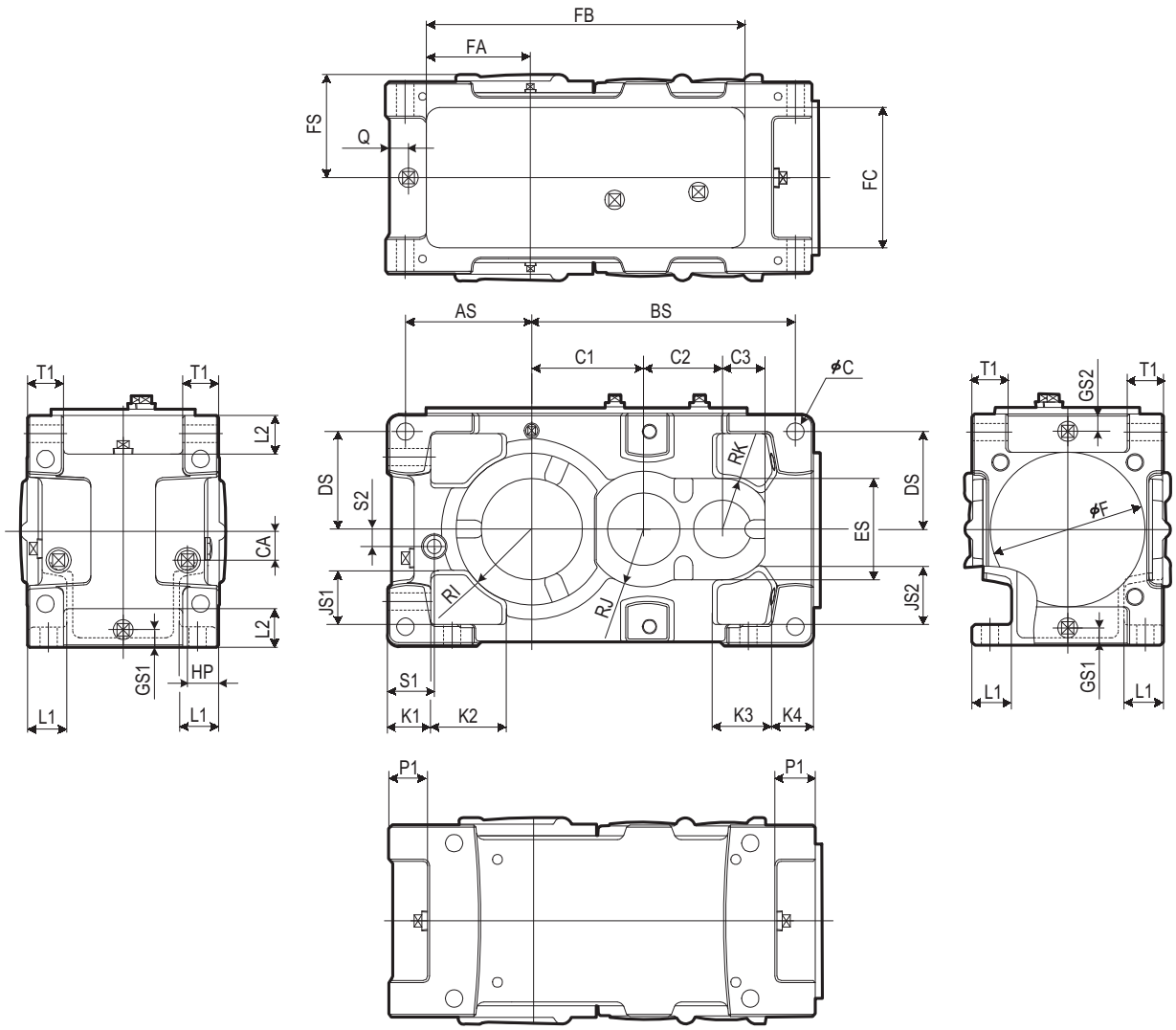

Size	FS	FA	FB	FC	AS	BS	C	CA	HP	DS	GS1	GS2	JS1	JS2	K1	K2	K3	K4
9015	118	110	325	175	140	260	15	25	38	115	23	23	60	58	50	75	85	50
9025	130	125	385	190	155	310	19	30	41	135	24	24	70	65	55	90	110	55
9030	143	147	445	200	175	365	24	40	43	135	24	24	75	81	60	105	80	60
9035	143	166	495	200	194	396	24	40	43	160	24	24	90	106	60	105	80	60
9040	165	168	510	240	205	420	28	48	55	170	28	28	95	107	75	125	100	75
9045	165	189	570	240	226	459	28	48	55	190	28	28	115	127	75	125	100	75
9050	185	188	590	250	225	490	28	55	50	180	29	29	95	103	75	135	100	75
9055	185	219	660	250	256	529	28	55	50	215	29	29	120	138	75	135	100	75

Size	L1	L2	P1	Q	T1	S1	S2	RI	RJ	RK	F	C1	C2	C3	ES
9015	38	47	50	25	35	53	23	80	65		175	115	79	55	110
9025	45	50	50	26	40	58	26	87.5	75		200	135	92	60	130
9030	54	53	53	27	50	65	24	105	80	70	214	155	109	59	140
9035	54	60	53	27	50	65	24	120	80	70	214	186	109	59	140
9040	66	67	67	30	60	70	28	120	90	72.5	250	180	126	72.5	145
9045	66	87	67	30	60	70	28	140	90	72.5	250	219	126	72.5	145
9050	68	67	67	31	60	78	32	140	105		280	210	148	59	150
9055	68	80	67	31	60	78	32	155	105		280	249	148	59	150

TECHNICAL DATA Supplementary Dimension Drawing

9015▶9055 / Right Angle Quadruple / Parallel Triple, Quadruple / Horizontal, Vertical, Upright

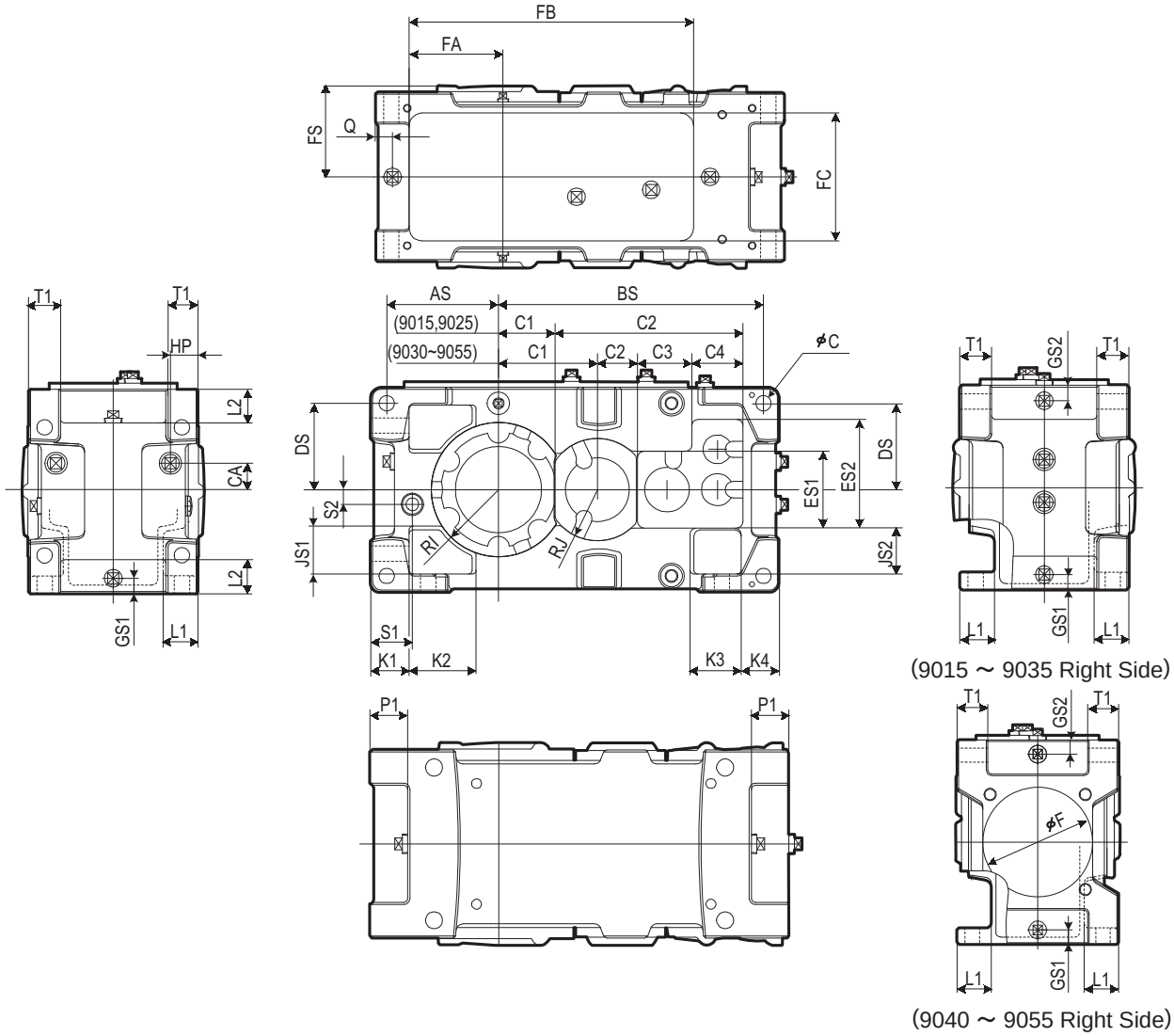

Size	FS	FA	FB	FC	AS	BS	C	CA	HP	DS	GS1	GS2	JS1	JS2	K1	K2	K3	K4
9015	118	110	325	175	140	305	15	25	38	115	23	23	60	58	50	75	65	50
9025	130	125	385	190	155	375	19	23	41	135	24	24	70	65	55	90	85	55
9030	143	147	445	200	175	415	24	44	43	135	24	24	75	72	60	105	80	60
9035	143	166	495	200	194	446	24	44	43	160	24	24	90	97	60	105	80	60
9040	165	168	510	240	205	494	28	56	55	170	28	28	95	100	75	125	100	75
9045	165	189	570	240	226	533	28	56	55	190	28	28	115	120	75	125	100	75
9050	185	188	590	250	225	563	28	56	50	180	29	29	95	103	75	135	100	75
9055	185	219	660	250	256	602	28	56	50	215	29	29	120	138	75	135	100	75

Size	L1	L2	P1	Q	T1	S1	S2	RI	RJ	F	C1	C2	C3	C4	ES1	ES2
9015	38	47	50	25	35	53	19	80			70	20			110	
9025	45	50	50	26	40	58	23	87.5			82.5	281			130	
9030	54	53	53	27	50	65	23	105	80		155	63	85	80	120	170
9035	54	60	53	27	50	65	23	120	80		186	63	85	80	120	170
9040	66	67	67	30	60	70	24	120	90	214	180	74	99	90	140	200
9045	66	87	67	30	60	70	24	140	90	170	219	74	99	90	140	200
9050	68	67	67	31	60	78	24	140	105	214	210	89	118	96	150	202
9055	68	80	67	31	60	78	24	155	105	214	249	89	118	96	150	202

TECHNICAL DATA Supplementary Dimension Drawing

9060 ▶ 9085 / Right Angle Double, Triple / Parallel Double / Horizontal, Vertical, Upright

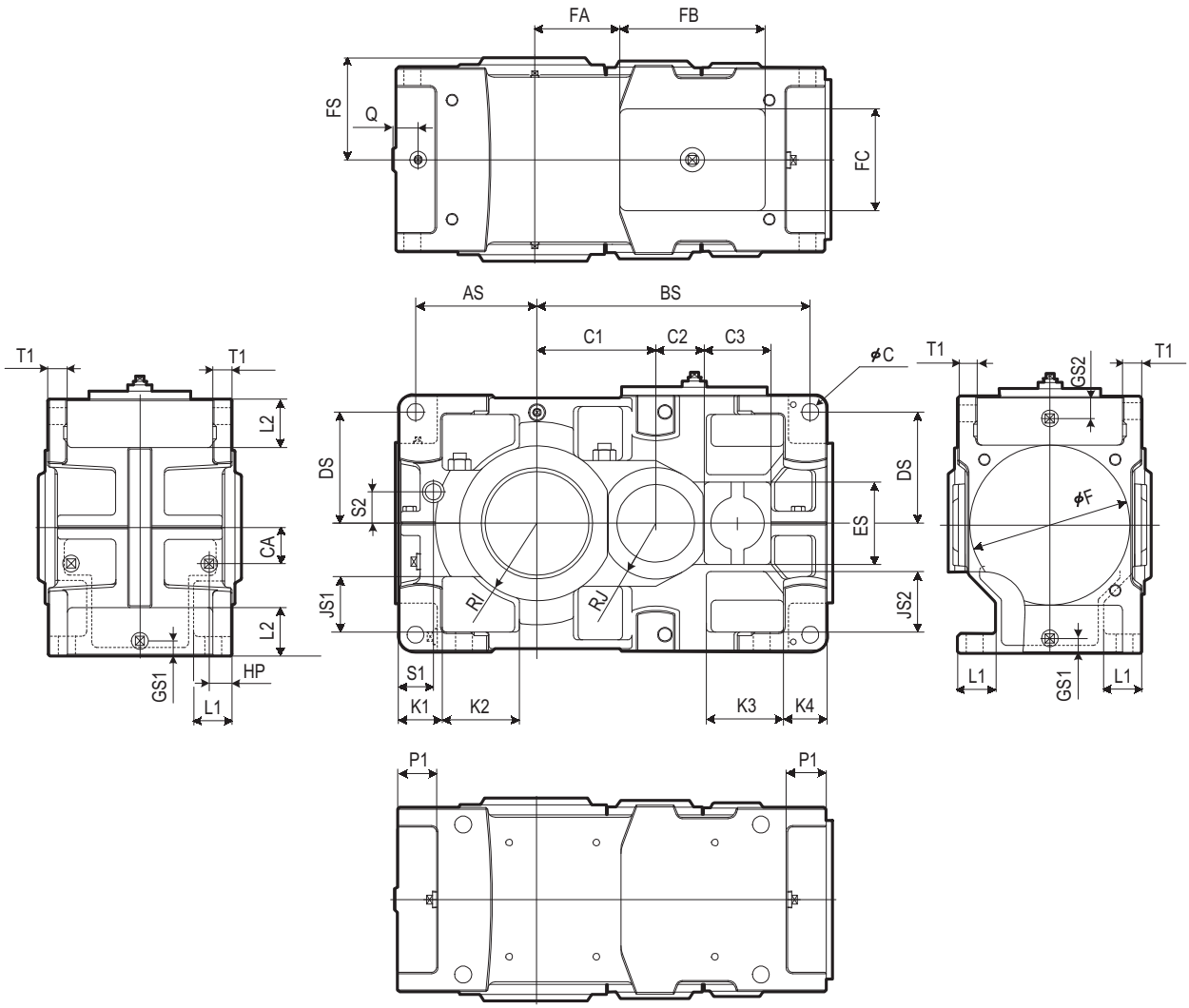

Size	FS	FA	FB	FC	AS	BS	C	CA	HP	DS	GS1	GS2	JS1	JS2	K1	K2	K3	K4
9060	210	175	300	210	251	564	35	75	47	230	31	45	105	120	90	160	160	90
9065	210	221	300	210	290	610	35	75	47	265	31	45	140	155	90	160	160	90
9070	235	185	370	270	283	657	42	85	47	260	33	45	125	135	105	190	190	105
9075	235	238	370	270	330	710	42	85	47	295	33	45	148	158	105	190	190	105
9080	255	275	370	270	325	750	42	100	47	295	34	45	138	148	105	190	190	105
9085	265	331	370	270	369	806	42	100	47	335	34	45	168	188	105	190	190	105

Size	L1	L2	P1	Q	T1	S1	S2	RI	RJ	F	C1	C2	C3	ES
9060	79	100	80	40	35	72	65	160	115	330	245	100	138	170
9065	79	135	80	40	35	72	65	175	115	330	291	100	138	170
9070	94	110	95	40	40	72	75	175	138	380	285	94.5	203	200
9075	94	145	95	40	52	72	75	190	138	380	338	94.5	203	200
9080	96	120	95	45	52	82	85	190	160	420	330	132	188	220
9085	96	160	95	45	52	82	85	215	160	420	386	132	188	220

TECHNICAL DATA Supplementary Dimension Drawing

9060 ▶ 9085 / Right Angle Quadruple / Parallel Triple, Quadruple / Horizontal, Vertical, Upright

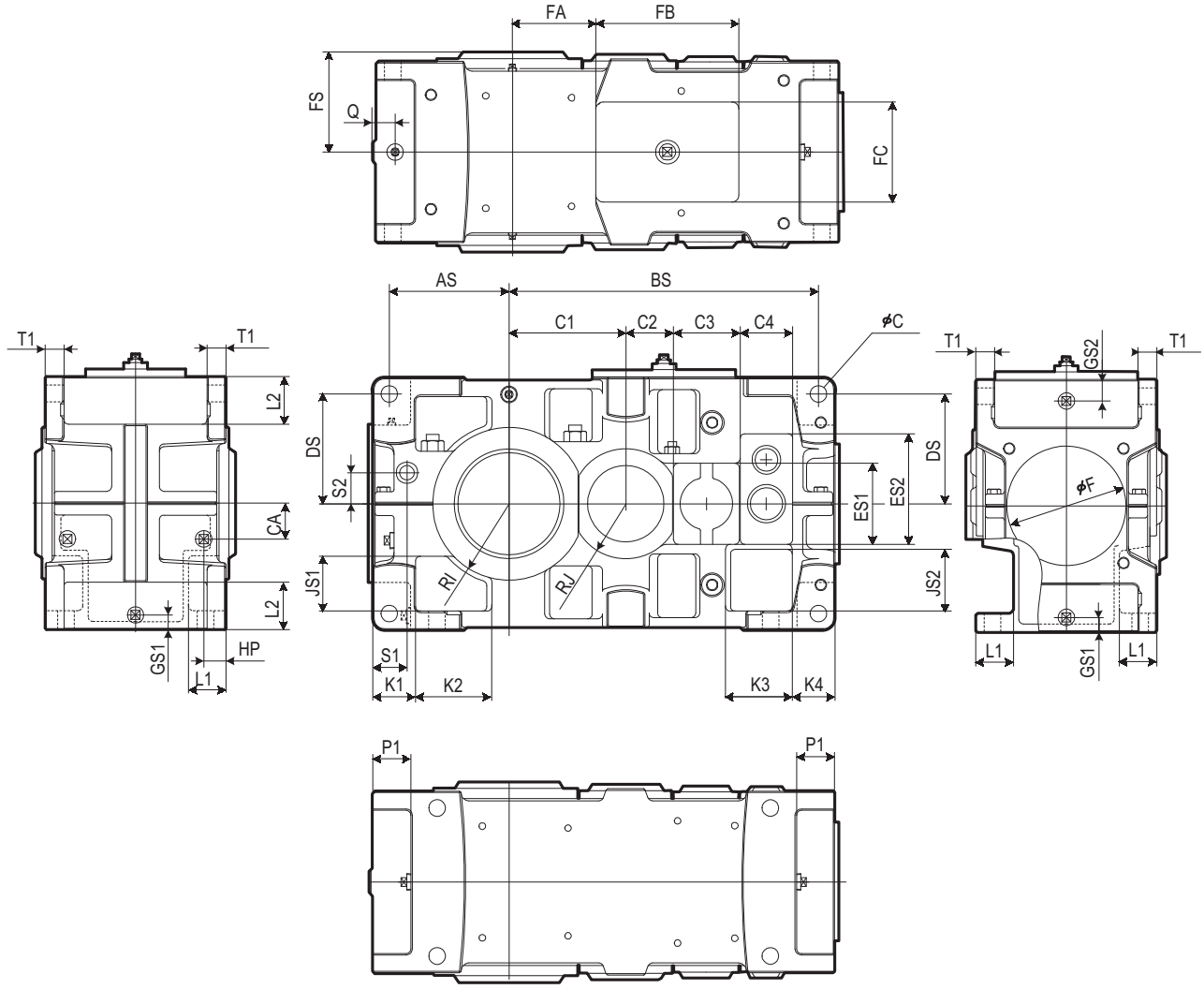

Size	FS	FA	FB	FC	AS	BS	C	CA	HP	DS	GS1	GS2	JS1	JS2	K1	K2	K3	K4
9060	210	175	300	210	251	649	35	75	47	230	31	45	105	145	90	160	140	90
9065	210	221	300	210	290	695	35	75	47	265	31	45	140	180	90	160	140	90
9070	235	185	370	270	283	752	42	85	47	260	33	45	125	165	105	190	165	105
9075	235	238	370	270	330	805	42	85	47	295	33	45	148	188	105	190	165	105
9080	255	275	370	270	325	870	42	100	47	295	34	45	138	173	105	190	190	105
9085	265	331	370	270	369	926	42	100	47	335	34	45	168	213	105	190	190	105

Size	L1	L2	P1	Q	T1	S1	S2	RI	RJ	F	C1	C2	C3	C4	ES1	ES2
9060	79	100	80	40	35	72	65	160	115	250	245	100	138	110	170	232
9065	79	135	80	40	35	72	65	175	115	250	291	100	138	110	170	232
9070	94	110	95	40	40	72	75	175	138	280	285	94.5	203	120	200	267
9075	94	145	95	40	52	72	75	190	138	280	338	94.5	203	120	200	267
9080	96	120	95	45	52	82	85	190	160	330	330	132	188	146	220	305
9085	96	160	95	45	52	82	85	215	160	330	386	132	188	146	220	305

TECHNICAL DATA Supplementary Dimension Drawing

9090 ▶ 9115/ Parallel Double, Triple, Quadruple / Horizontal / Right Angle Double, Triple, Quadruple / Horizontal

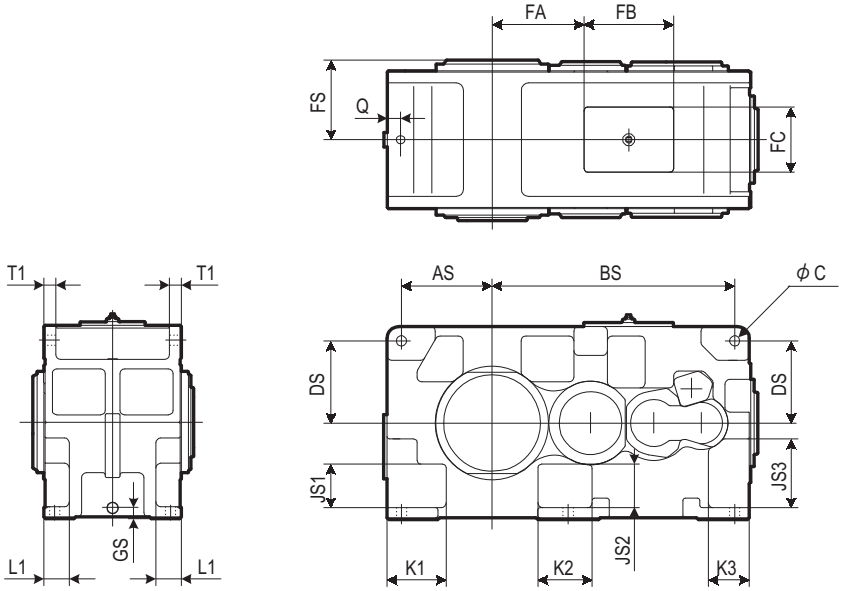

Size	FS	FA	FB	FC	AS	BS	C	DS	GS	JS1	JS2	JS3	K1	K2	K3	L1	Q	T1
9090	330	350	370	270	345	975	42	315	45	155	152	260	230	240	170	96	45	50
9095	330	380	370	270	375	1005	42	340	45	180	177	285	245	225	170	106	45	50
9100	375	435	370	270	375	1095	48	355	46	185	170	305	265	290	190	110	45	55
9105	375	470	370	270	410	1130	48	380	46	210	195	330	270	260	190	120	45	55
9110	407	525	370	270	420	1240	56	400	48	230	202	350	285	325	310	119	45	60
9115	407	575	370	270	470	1290	56	425	48	255	227	375	315	305	310	129	45	60

9090 ▶ 9115/ Parallel Double, Triple, Quadruple / Vertical / Right Angle Double, Triple, Quadruple/Vertical

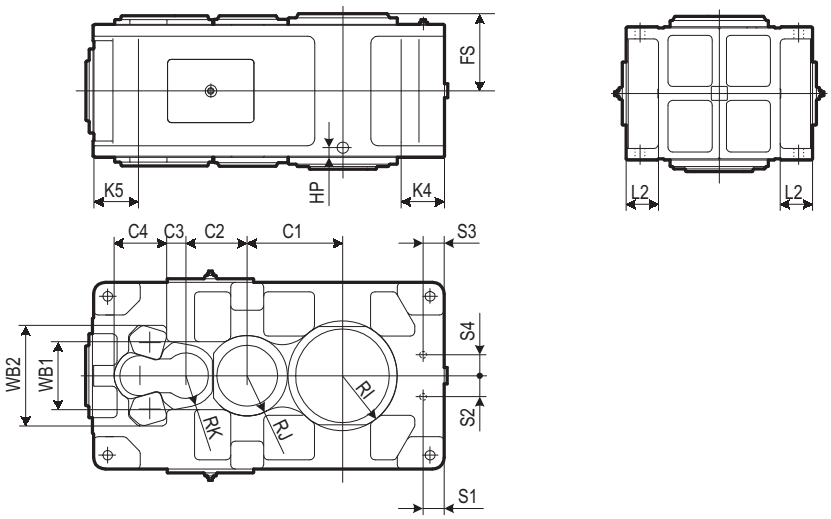

Size	FS	HP	K4	K5	L2	RI	RJ	RK	S1	S2	S3	S4	C1	C2	C3	C4	WB1	WB2
9090	330	42	170	190	130	215	173	133	90	130	90	90	378	262	82	225	290	430
9095	330	42	185	215	140	235	173	133	80	140	90	90	408	262	82	225	290	430
9100	375	43	190	220	150	235	200	145	85	145	90	100	425	299	91	260	370	500
9105	375	43	215	240	160	260	200	145	80	155	90	100	459	299	91	260	370	500
9110	407	44	210	240	170	265	213	160	90	150	105	100	483	341	90	261	370	500
9115	407	44	235	270	180	280	213	160	85	150	105	100	532	341	90	261	370	500

TECHNICAL DATA Supplementary Matters to Hollow Shaft

Feature and Benefits

PARAMAX DRIVE units have a number of outstanding features compared to conventional solid shaft speed reducers.

1. There is no necessity for a large sized coupling, permitting substantial cost reduction.
2. It can be directly mounted onto the driven shaft, eliminating the necessity for foundation working for speed reducer installation and alignment operation.
3. Any unit is designed for compactness and ease of operation.

How to Install Unit

a. Torque Arm (Option)

The hollow shaft type PARAMAX DRIVE is secured with the torque arm to prevent it from being turned by the counter force.

A torque arm is subjected to a compression or tensile load depending upon the direction of rotation of the slow speed shaft, and it must have a sufficient strength against shock loading at the start and during operation. Being prepared as a optional accessory, the torque arm is designed in consideration of such loading conditions.

Please order us, if it is necessary.

The construction and strength of the torque arm mounting legs must be determined in consideration of impact load.

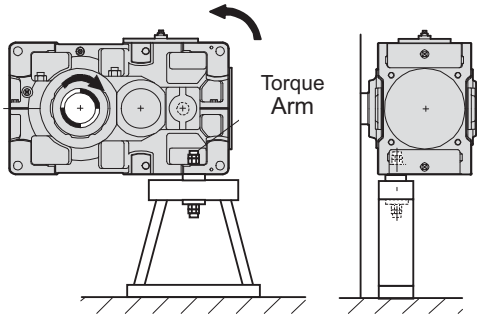

(DRG C1701)

b. How to Use Torque Arm

(1) When the torque arm is used with the speed reducer housing
The torque arm must be mounted in an installation hole closer to the application machine. (For torque arm mounting dimensions, refer to the dimension drawing.)

(2) When the torque arm is used with the common base plate
The torque arm must be mounted in a position as far from the low speed shaft as possible.

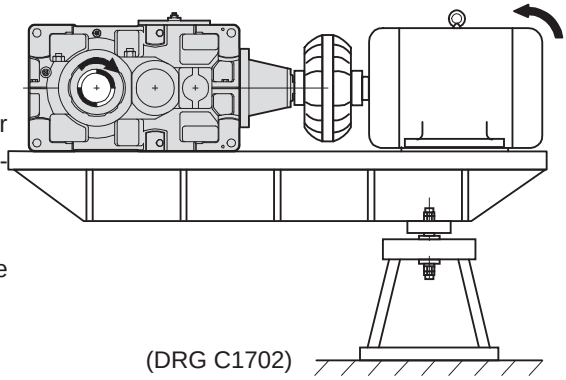

(DRG C1702)

Torque Arm Dimensions

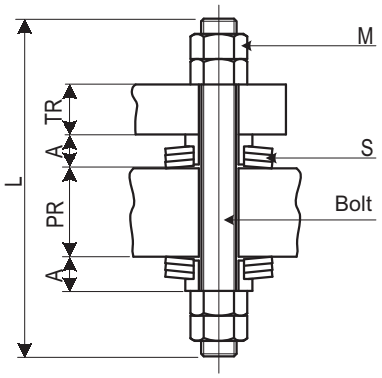

(DRG C1703)

Use bolt and nut classified as JIS strength class 8.8

Size	A	L	M (nut)	PR max	TR	S (bellevile spring)	
						DIN2093(nom.)	Qty
9015	13.1	140	M12	35	22	A50	2X2
9025	16.1	170	M16	40	25	A50	2X3
9030	18.9	200	M20	50	28	A63	2X3
9035	18.9	200	M20	50	28	A63	2X3
9040	21.7	240	M24	60	30	A80	2X2
9045	21.7	240	M24	60	30	A80	2X2
9050	21.7	240	M24	60	32	A80	2X2
9055	21.7	240	M24	60	32	A80	2X2
9060	32.2	310	M30	85	35	A100	2X3
9065	32.2	310	M30	85	35	A100	2X3
9070	38.2	370	M36	95	40	A100	2X4
9075	38.2	370	M36	95	52	A100	2X4
9080	38.2	370	M36	95	52	A100	2X4
9085	38.2	370	M36	95	52	A100	2X4
9090	38.6	370	M36	95	50	A125	2X3
9095	38.6	370	M36	95	50	A125	2X3
9100	47.6	420	M42	100	55	A125	2X4
9105	47.6	420	M42	100	55	A125	2X4
9110	48.5	460	M48	110	60	A160	2X3
9115	48.5	460	M48	110	60	A160	2X3

TECHNICAL DATA Hollow Shaft Related Dimensions

1. Hollow Shaft Dimensions

Shrink Disk Coupling

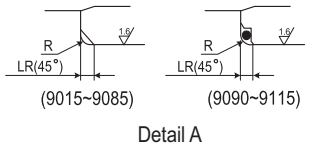

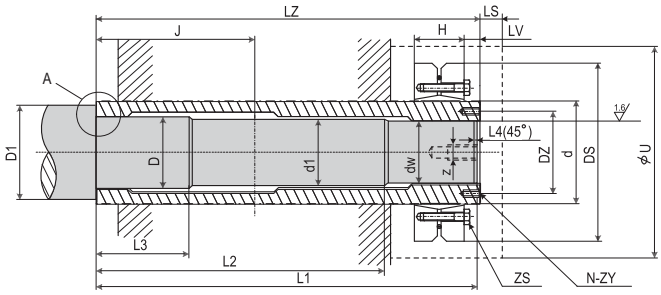

(DRG C1801)

Unit: mm

Size	Shrink Disk					Clamping Bolt	Hollow Shaft								Driven Shaft									
	MODEL (note 1)	d	Ds	H	ZS	TA N·m	J	LZ	LR	LV	N-ZY	DZ	LS	U	dw	d1	D h7	D1 min	L1	L2	L3	L4	R	Z (Thread depth)
9015	TAS3091.4-080	80	145	38	M8	35	135	328	3	14	4 - M6	70	15	159	60h6	61	63	78	325	240	80	3	2.5	M20 (30)
9025	TAS3081. -090	90	155	39	M8	35	145	358	3	14	4 - M6	80	17	174	70h6	71	73	88	355	270	80	3	2.5	M20 (30)
9030	TAS3091.1-100	100	170	54	M10	59	160	393	3	14	4 - M6	90	20	207	80h6	81	83	98	390	295	90	3	2.5	M20 (30)
9035	TAS3093. -110	110	185	60	M10	70	160	403	3	14	4 - M6	97	20	237	85h6	86	88	103	400	295	90	3	2.5	M24 (35)
9040	TAS3081. -125	125	215	54	M10	70	180	448	3	20	4 - M8	110	17	237	95h6	96	98	113	445	335	110	3	2.5	M24 (35)
9045	TAS3093. -140	140	230	74	M12	120	180	463	3	20	4 - M10	124	17	277	105h6	106	108	123	460	355	110	3	2.5	M24 (35)
9050	TAS3093. -140	140	230	74	M12	120	200	503	3	22	4 - M10	124	17	277	105h6	106	108	123	500	380	110	3	2.5	M24 (35)
9055	TAS3091. -165	165	290	88	M16	250	205	528	3	27	4 - M12	146	17	307	120h6	121	123	138	525	385	120	3	2.5	M24 (35)
9060	TAS3091. -165	165	290	88	M16	250	230	583	4.5	27	4 - M12	146	17	319	125h6	126	128	143	580	435	130	3	3	M24 (35)
9065	TAS3091. -175	175	300	88	M16	250	235	594	4.5	26	4 - M12	157.5	21	349	140h6	141	143	158	589	450	130	5	3	M30 (45)
9070	TAS3081. -185	185	330	86	M16	290	260	644	4.5	26	4 - M12	167	21	349	145h6	146	148	163	640	475	160	5	3	M30 (45)
9075	TAS3081. -200	200	350	86	M16	290	265	651	4.5	26	4 - M12	177	21	379	155h6	156	158	173	646	475	160	5	3	M30 (45)
9080	TAS3081. -220	220	370	104	M16	290	285	714	4.5	26	4 - M12	195	21	399	170g6	171	173	192	709	520	190	5	3	M30 (45)
9085	TAS3081. -240	240	405	109	M20	570	285	714	4.5	27	4 - M12	210	21	429	180g6	181	183	198	709	520	190	5	3	M30 (45)
9090	TAS3081. -240	240	405	109	M20	570	350	844	6	27	6 - M12	215	21	451	190g6	191	193	212	840	635	200	5	4.5	M36 (55)
9095	TAS3081.1-260	260	440	120	M20	535	350	859	6	27	6 - M12	230	14	450	200g6	201	203	222	855	640	205	5	4.5	M36 (55)
9100	TAS3081.1-260	260	440	120	M20	535	390	934	6	27	6 - M12	235	21	491	210g6	211	213	234	930	705	215	5	4.5	M36 (55)
9105	TAS3081.1-280	280	460	134	M20	535	390	949	6	27	6 - M12	250	19	480	220g6	221	223	244	945	715	225	5	4.5	M36 (55)
9110	TAS3081.1-300	300	485	142	M20	535	420	1030	6	32	6 - M16	270	15	551	240g6	241	243	263	1025	770	245	5	4.5	M36 (55)
9115	TAS3091. -320	320	520	184	M20	490	420	1065	6	32	6 - M16	285	15	550	250g6	251	253	273	1060	785	245	5	4.5	M36 (55)

Note: 1 Shrink disc (manufactured by SCHÄFER) type code.
2 Mount a thrust washer on a vertical reducer to prevent the reducer from moving when locking bolts(ZS) is loosened.

Key Coupling

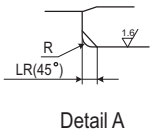

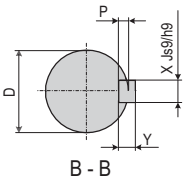

9015~9055

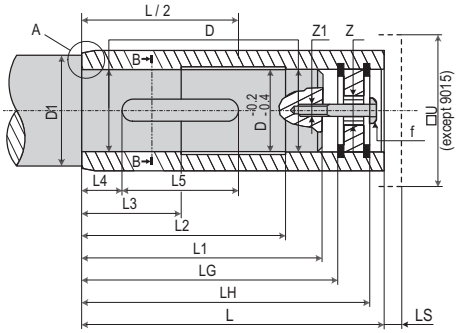

9060~9085

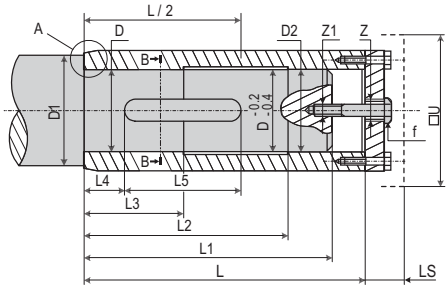

(DRG C1802)

Unit: mm

Size	Hollow Shaft						Safety Cover	Driven Shaft												Locking Screw Thread Size X Body Length DRG C1802(f)	Locking Distance Ring O.D. X W DRG C1906,1910(h)
	L	LG	LH	LR	Z	LS	U	D j6	D1 min	D2 j6	L1	L2	L3	L4	L5 min	X	Y	P	R	Z1 (Thread depth)	
9015	270	240	258	3	M24	7.5	φ161	55	70		235	200	70	30	115	16	10	6	2.5	M20(30)	M20X50	φ 55X5
9025	300	265	286	3	M24	10	190	65	80		260	220	80	35	125	18	11	7	2.5	M20(30)	M20X50	φ 65X5
9030	330	290	314	3	M24	9.5	230	75	90		285	240	90	35	145	22	14	9	2.5	M20(30)	M20X55	φ 75X5
9035	330	290	315	3	M24	10	260	85	100		285	240	90	35	160	22	14	9	2.5	M20(30)	M20X55	φ 85X5
9040	360	314	340	3	M30	10	260	90	105		310	260	100	40	180	25	14	9	2.5	M24(35)	M24X60	φ 90X4
9045	370	316	348	3	M30	10	300	105	120		310	260	100	40	180	28	16	10	2.5	M24(35)	M24X65	φ 105X6
9050	410	356	388	3	M30	10	300	105	120		350	300	110	45	220	28	16	10	2.5	M24(35)	M24X65	φ 105X6
9055	410	356	388	3	M30	10	330	115	130		350	300	110	45	220	32	18	11	2.5	M24(35)	M24X65	φ 115X6
9060	470			4.5	M30	47	340	125	140	123	445	395	90	5	260	32	18	11	3	M24(35)	M24X80	φ 125X25
9065	480			4.5	M36	54	350	145	160	143	455	405	100	5	265	36	20	12	3	M30(45)	M30X100	φ 145X30
9070	530			4.5	M36	54	370	145	160	143	500	445	120	5	310	36	20	12	3	M30(45)	M30X100	φ 145X30
9075	530			4.5	M36	54	400	150	165	148	500	445	120	5	365	40	22	13	3	M30(45)	M30X100	φ 150X30
9080	570			4.5	M36	54	400	165	180	163	540	480	125	5	370	40	22	13	3	M30(45)	M30X100	φ 165X30
9085	570			4.5	M36	54	450	175	190	173	540	480	125	5	385	45	25	15	3	M30(45)	M30X100	φ 175X30

Note: 1 The key and keyway conform to JIS B 1301-1996(ISO)"Sunk keys and keyways" parallel keys (regular class)
2 The locking screw and distance ring will not be supplied. Please prepare, if they are necessary.
3 Dimension from center of housing to shaft end is L/2.

2. Shrink Disk Coupling / Mounting & Removal Procedure

Mounting Procedure (DRG C1901)

(1) Clean and degrease contact surface (a) and (c).
(2) Smear surface (c) with "Molykote 321" or its equivalent.
However, keep surface (a) as clean as possible (no grease).
(3) Slide O-ring (b) onto the shaft.(Size 9090 to 9115)
(4) Mount the reducer on the driven shaft and screw nuts (e) until faces (g) and (h) make contact.
(5) Set the shrink disk (k) at dimensions (LV). Tighten locking bolt (ZS) at specified torque (TA) (using a torque wrench).

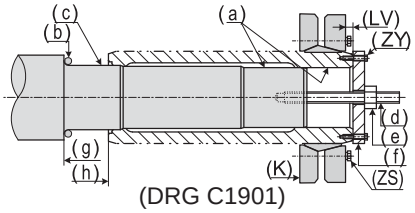

(DRG C1901)

Removal Procedure (DRG C1902)

(1) Loosen locking bolt (ZS) and remove shrink disk (k).
(2) Set thrust washer (f) and hexagon head bolt (n).
Remove the reducer from the driven shaft using bolt (m).
Note: Parts (d), (e), (f), (ZY), (m) and (n) are optional.
Order these as required.

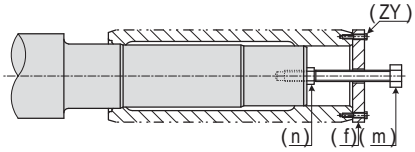

(DRG C1902)

3. Key Coupling / Mounting & Removal Procedure

Size 9015 to 9055

Mounting Procedure (DRG C1903)

The Hollow shaft bore is provided with retaining ring (d).
Ring (d) is the essential component for mounting, securing, and removing the unit.
(1) Smear surface of the shaft (e) with "molykote 321" or its equivalent.
(2) Turn nut (b) and slide the reducer over the driven shaft.
Use plain washer (c), if they are necessary.

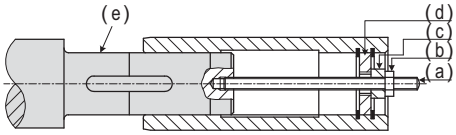

(DRG C1903)

Securing (DRG C1904)

(1) After mounting the reducer on the driven shaft, fix bolt (f). (Bolt (f) is not supplied with the unit.)
(2) The bore should be protected by cover (g).

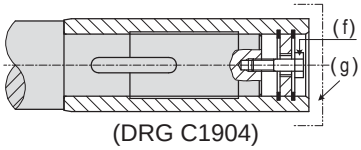

(DRG C1904)

Removal Procedure (DRG C1905)

(1) Remove ring (d), mount bolt (n), and reset ring (d).
Attach bolt (J) to ring (d), and turn bolt (J) to disconnect the hollow shaft from the driven shaft.
Screw size, refer to the lower table (Z) of the page C-18.

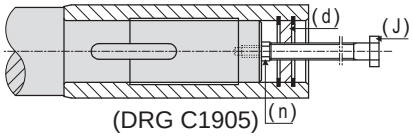

(DRG C1905)

Special Cases (DRG C1906)

(1) If the driven shaft has no shoulder (DRG C1906) when mounting, provide a distance ring (h) for fixing in place. (Ring (h) is not supplied with the unit).

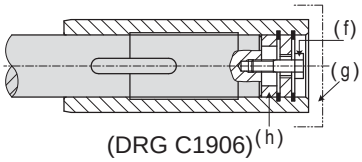

(DRG C1906)

Size 9060 to 9085

Mounting Procedure (DRG C1907)

The Hollow shaft end is provided with thrust washer (d).
Thrust washer (d) is the essential component for mounting, securing, and removing the unit.
(1) Smear surface of the shaft (e) with "molykote 321" or its equivalent.
(2) Turn nut (b) and slide the reducer over the driven shaft.

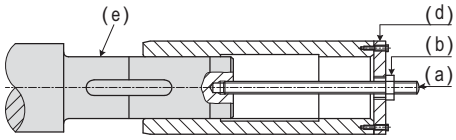

(DRG C1907)

Securing (DRG C1908)

(1) After mounting the reducer on the driven shaft, fix bolt (f). Bolt (f) is not supplied with the unit.)
(2) The bore should be protected by cover (g)

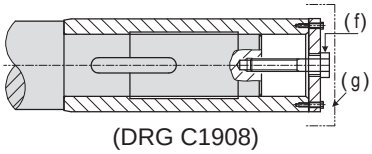

(DRG C1908)

Removal Procedure (DRG C1909)

(1) Remove thrust washer (d), mount bolt (n), and reset thrust washer (d).
Attach bolt (J) to thrust washer (d), and turn bolt (J) to disconnect the hollow shaft from the driven shaft.
Screw size, refer to the lower table (Z) of the page C-18.

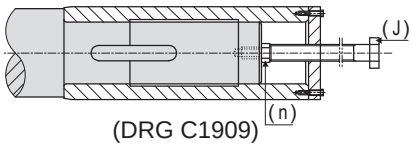

(DRG C1909)

Special Cased (DRG C1910)

(1) If the driven shaft has no shoulder (DRG D1906) when mounting, provide a distance ring (h) for fixing in place.(Ring (h) is not supplied with the unit.)
Distance ring dimension, refer to the lower table of the page C-18.

Note : Parts (a),(b),(c),(n) and (J) are optional. Order these as required.

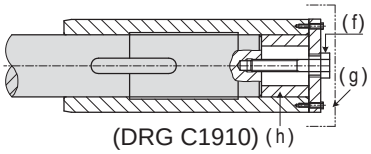

(DRG C1910)

TECHNICAL DATA Cooling Fan Dimension

9015 ▶ 9085 Right Angle Double Reduction

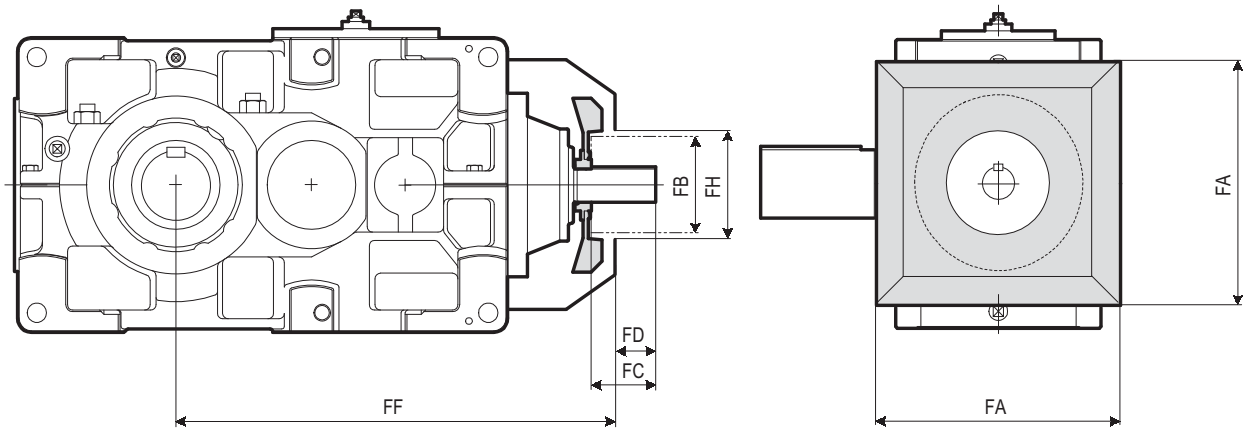

9090 ▶ 9115 Right Angle Double Reduction

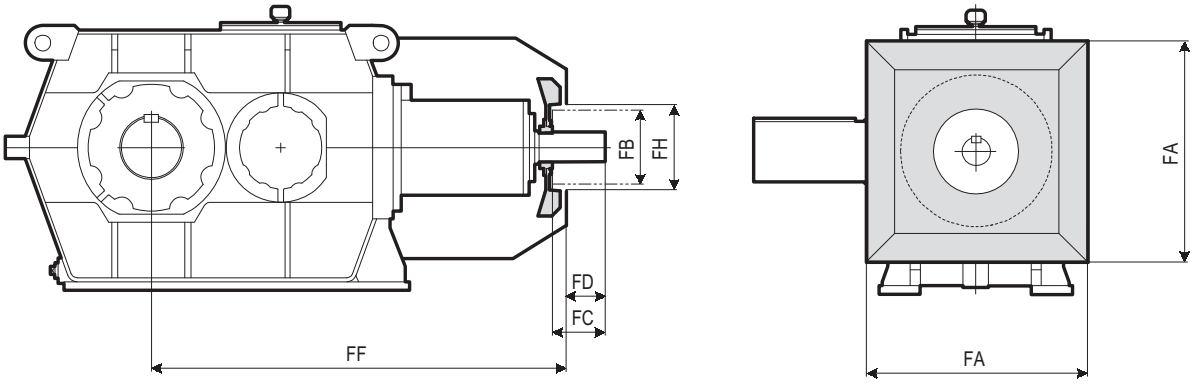

Size	FA	FB	FC	FD	FF	FH
9015	250	125	50	30	477	145
9025	270	140	50	30	515	160
9030	300	140	80	52	593	160
9035	300	140	80	52	624	160
9040	340	160	80	52	653	180
9045	340	160	80	52	692	180
9050	380	160	80	52	703	180
9055	380	160	80	52	742	180
9060	440	160	105	65	800	180
9065	440	160	105	65	846	180
9070	490	200	105	65	900	220
9075	490	200	105	65	953	220
9080	540	225	105	60	1020	245
9085	540	225	105	60	1076	245

Size	FA	FB	FC	FD	FF	FH
9095	680	250	135	90	1303	270
9105	760	250	175	130	1459	270
9115	820	250	175	130	1672	270

- Sufficient space must be allowed for air intake when mounting the safety guards for the coupling or other component.
- The split fan hood is prepared as a optional accessory for conducting maintenance work on a large coupling.【Refer to the "PARAMAX 9000 Series Option Catalog No.G2052E".】

TECHNICAL DATA Cooling Fan Dimension

9015 ▶ 9085 Right Angle Triple Reduction

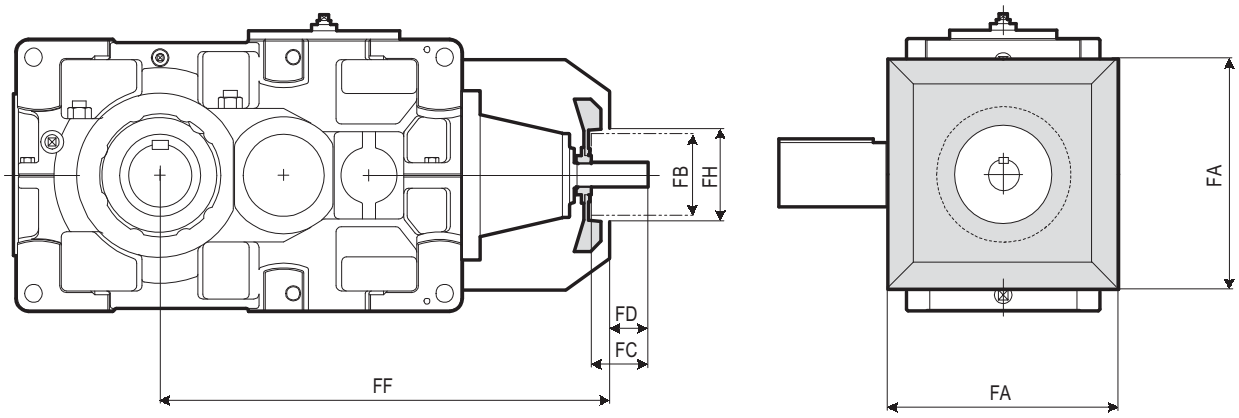

9090 ▶ 9115 Right Angle Triple Reduction

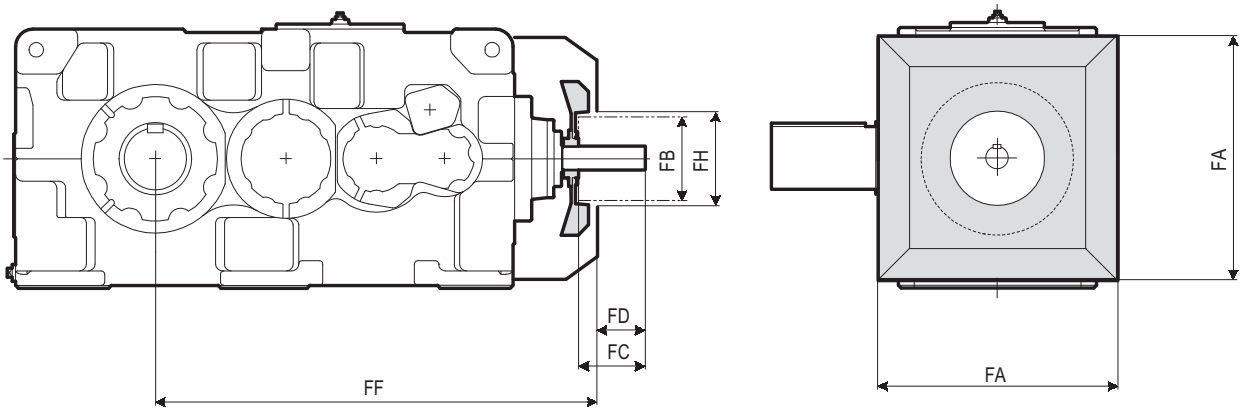

Size	FA	FB	FC	FD	FF	FH
9030	300	125	50	30	626	145
9035	300	125	50	30	657	145
9040	340	125	50	30	686	145
9045	340	125	50	30	725	145
9050	380	140	50	22	786	160
9055	380	140	50	22	825	160
9060	440	160	80	52	887	180
9065	440	160	80	52	933	180
9070	490	160	80	52	975	180
9075	490	160	80	52	1028	180
9080	540	160	105	65	1111	180
9085	540	160	105	65	1167	180

Size	FA	FB	FC	FD	FF	FH
9090	680	200	105	65	1255	220
9095	680	200	105	65	1285	220
9100	760	225	105	60	1414	245
9105	760	225	105	60	1448	245
9110	820	225	135	90	1594	245
9115	820	225	135	90	1643	245

Note) Consult us for cooling fan dimension of size 9118 and 9136.

TECHNICAL DATA Cooling Fan Dimension

9015 ▶ 9085 Parallel Double Reduction

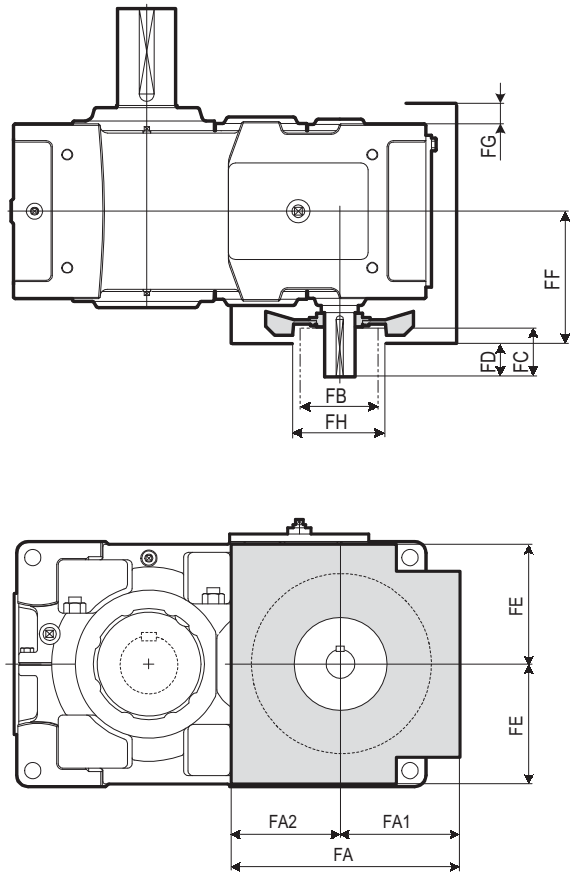

9090 ▶ 9115 Parallel Double Reduction

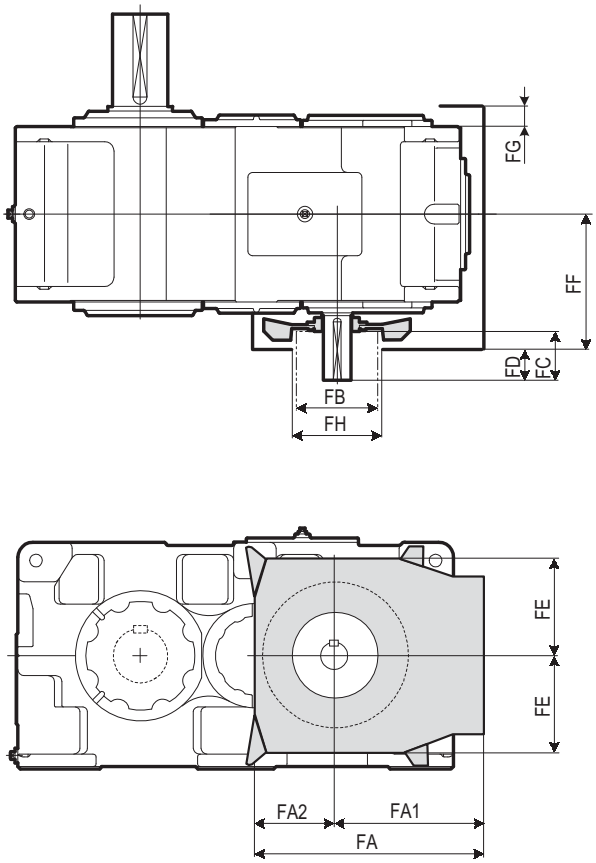

※ When tightening installation bolt, remove fan hood.

Size	FA1	FA2	FA	FB	FC	FD	FE	FF	FG	FH
9015	129	129	258	125	50	30	130	181	32.5	145
9025	143	143	286	140	50	30	150	196	27.5	160
9030	169	169	338	140	80	52	155	217	27.5	160
9035	169	169	338	140	80	52	180	217	27.5	160
9040	188	188	376	160	80	52	195	232	21.5	180
9045	188	188	376	160	80	52	215	232	21.5	180
9050	208	208	416	160	80	52	205	251	28.5	180
9055	208	208	416	160	80	52	240	251	28.5	180
9060	240	240	480	200	105	65	260	295	40	220
9065	240	240	480	200	105	65	295	295	40	220
9070	274	274	548	225	105	65	295	320	44	245
9075	274	274	548	225	105	65	330	320	44	245
9080	296	296	592	225	135	95	330	339	52	245
9085	296	296	592	225	135	95	370	339	52	245

Size	FA1	FA2	FA	FB	FC	FD	FE	FF	FG	FH
9090	465	277	742	250	135	90	345	410	65	270
9095	465	277	742	250	135	90	345	410	65	270
9100	515	314	829	250	175	130	395	455	65	270
9105	515	314	829	250	175	130	395	455	65	270
9110	565	356	921	250	175	130	445	485	65	270
9115	565	356	921	250	175	130	445	485	65	270

- Sufficient space must be allowed for air intake when mounting the safety guards for the coupling or other component.
- The split fan hood is prepared as a optional accessory for conducting maintenance work on a large coupling.【Refer to the "PARAMAX 9000 Series Option Catalog No.G2052E".】

TECHNICAL DATA Cooling Fan Dimension

9015 ▶ 9085 Parallel Triple Reduction

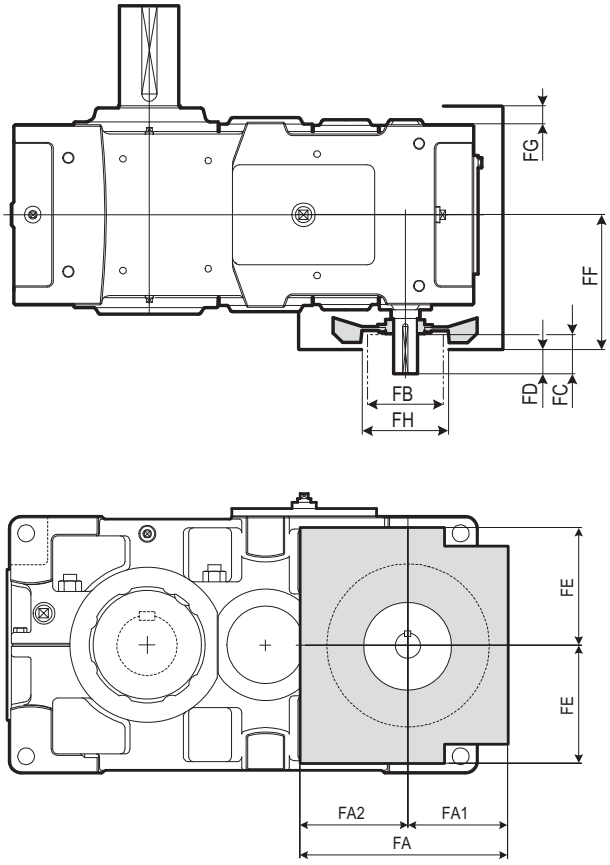

9090 ▶ 9115 Parallel Triple Reduction

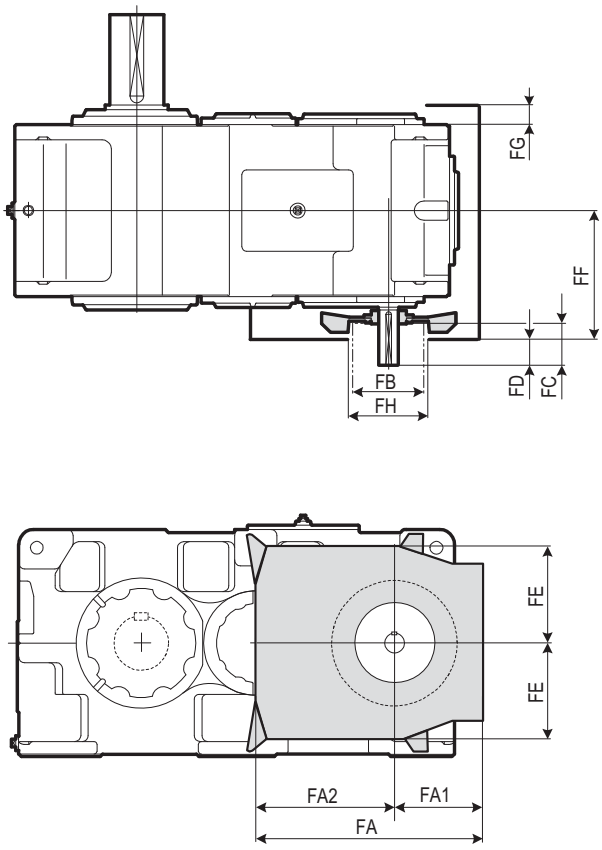

※ When tightening installation bolt, remove fan hood.

Size	FA1	FA2	FA	FB	FC	FD	FE	FF	FG	FH
9015	111	111	222	125	30	10	105	180	32.5	145
9025	129	129	258	125	30	10	125	194	27.5	145
9030	140	140	280	125	50	30	125	211	27.5	145
9035	150	150	300	140	50	22	150	219	27.5	160
9040	170	170	340	140	50	22	165	234	21.5	160
9045	170	170	340	140	50	22	185	234	21.5	160
9050	172	172	344	140	80	52	170	252	28.5	160
9055	172	172	344	140	80	52	205	252	28.5	160
9060	199	199	398	160	80	52	220	277	40	180
9065	199	199	398	160	80	52	255	277	40	180
9070	221	221	442	160	80	52	250	302	44	180
9075	221	221	442	160	80	52	285	302	44	180
9080	247	247	494	200	105	65	280	340	52	220
9085	247	247	494	200	105	65	320	340	52	220

Size	FA1	FA2	FA	FB	FC	FD	FE	FF	FG	FH
9090	268	474	742	200	105	65	345	405	65	220
9095	268	474	742	200	105	65	345	405	65	220
9100	289	540	829	225	105	65	395	450	65	245
9105	289	540	829	225	105	65	395	450	65	245
9110	339	582	921	225	135	95	445	480	65	245
9115	339	582	921	225	135	95	445	480	65	245

Note) Consult us for cooling fan dimension of size 9118 and 9136.

TECHNICAL DATA Option Dimension

9015 ▶ 9055 Right Angle Double, Triple, Quadruple / Parallel Double, Triple, Quadruple

Air Breather

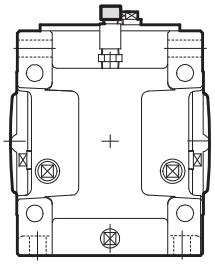

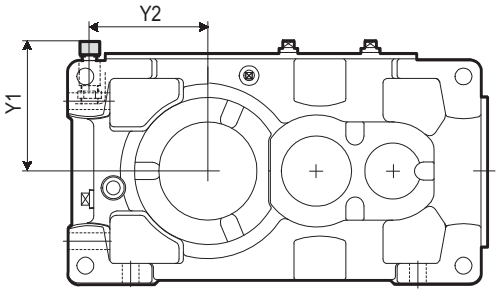

Size	Y1	Y2
9015	216	135
9025	233	149
9030	235	173

[9015~9030 Reduction Ratio 6.3~7.1]

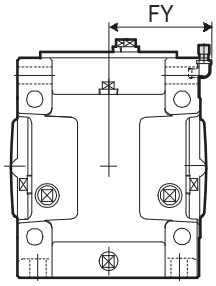

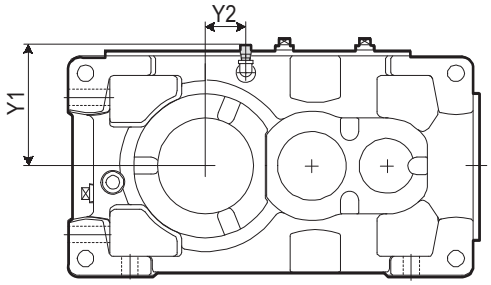

Size	Y1	Y2	FY
9015	162	35	129
9025	182	25	141
9030	187	0	154
9035	212	0	154
9040	227	30	171
9045	247	*30	171
9050	232	25	191
9055	267	0	191

[9015~9030 Reduction Ratio 8 or above]
[9035~9055 Reduction Ratio All]

* Double and triple reduction right angle, and double reduction parallel is 29mm.

Drain Valve

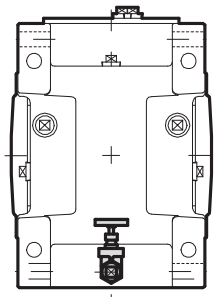

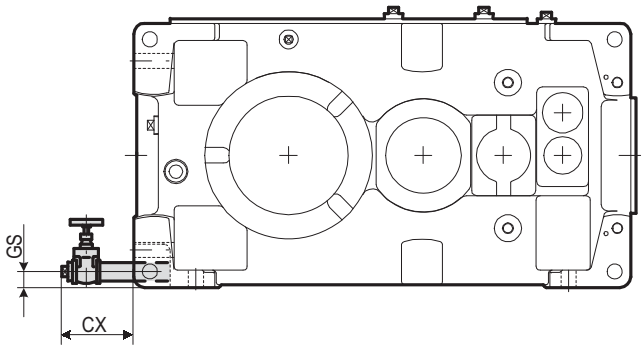

Size	CX	GS
9015	122	23
9025	122	24
9030	119	24
9035	119	24
9040	133	28
9045	133	28
9050	133	29
9055	133	29

9015 ▶ 9055 Right Angle Double, Triple, Quadruple / Parallel Double, Triple, Quadruple

Air Breather

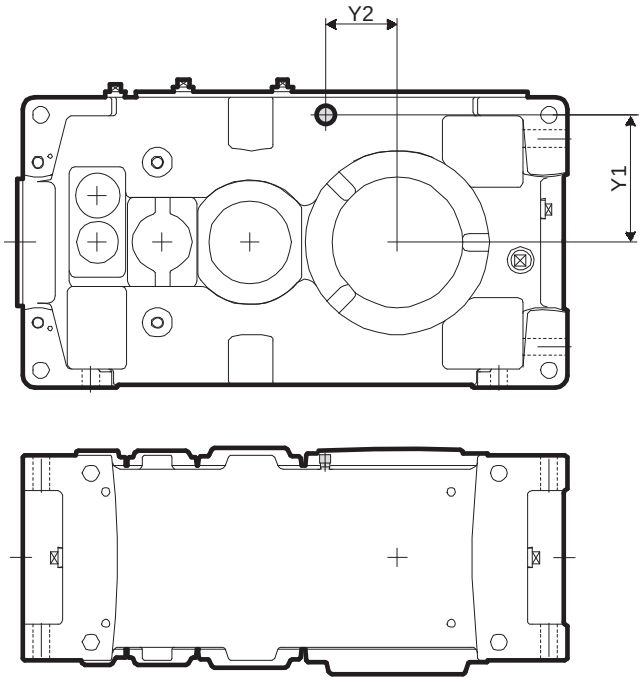

Size	Y1	Y2
9015	110	35
9025	130	25
9030	135	0
9035	160	0
9040	175	30
9045	195	*30
9050	180	25
9055	215	0

* Double and triple reduction right angle, and double reduction parallel is 29mm.

Drain Valve

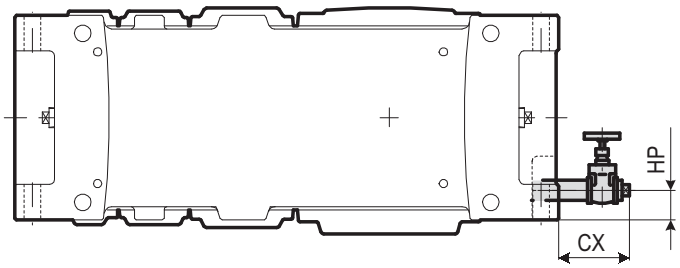

Size	CX	HP
9015	122	38
9025	117	41
9030	109	43
9035	109	43
9040	127	55
9045	127	55
9050	119	50
9055	119	50

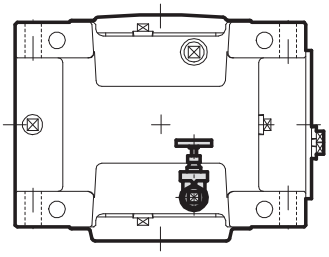

Parallel Triple, Quadruple
Right Angle Quadruple

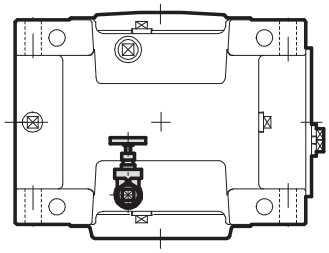

Parallel Double
Right Angle Double, Triple

TECHNICAL DATA Option Dimension

9015 ▶ 9055 Right Angle Double, Triple, Quadruple /Parallel Double, Triple, Quadruple

Air Breather

Size	Y1
9015	112
9025	131
9030	136
9035	161
9040	172
9045	192
9050	181
9055	216

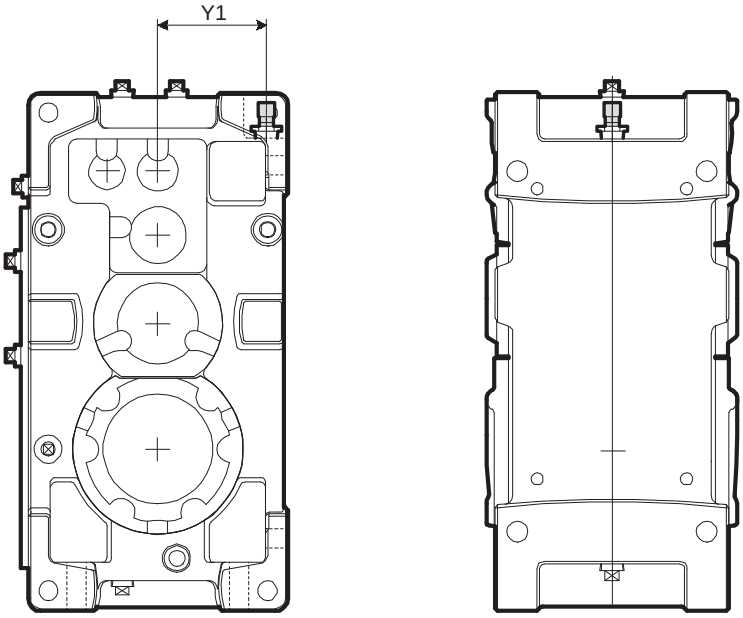

Drain Valve

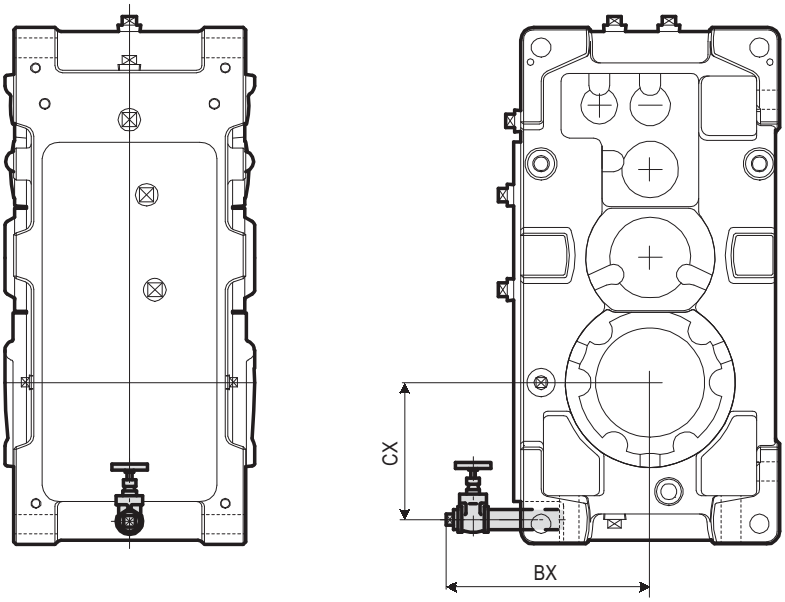

Size	BX	CX
9015	260	135
9025	277	149
9030	279	173
9035	297	192
9040	333	205
9045	353	226
9050	343	224
9055	365	255

TECHNICAL DATA Option Dimension

9060 ▶ 9085 Right Angle Double, Triple, Quadruple /Parallel Double, Triple, Quadruple

Air Breather

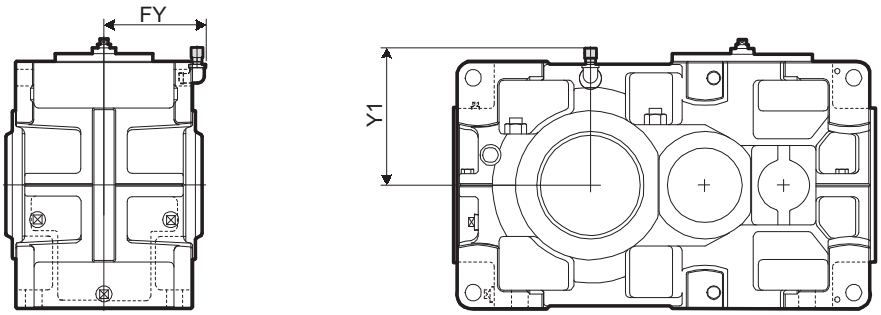

Size	Y1	FY
9060	281	211
9065	316	211
9070	315	236
9075	350	236
9080	350	256
9085	390	256

Oil Level Gauge

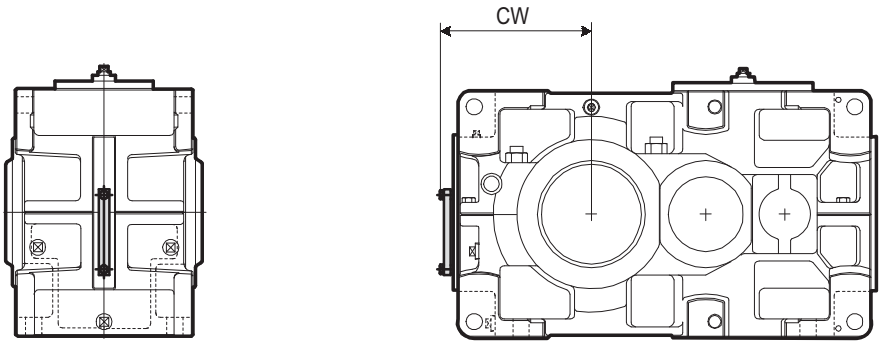

Size	CW
9060	318
9065	357
9070	355
9075	402
9080	397
9085	441

Drain Valve

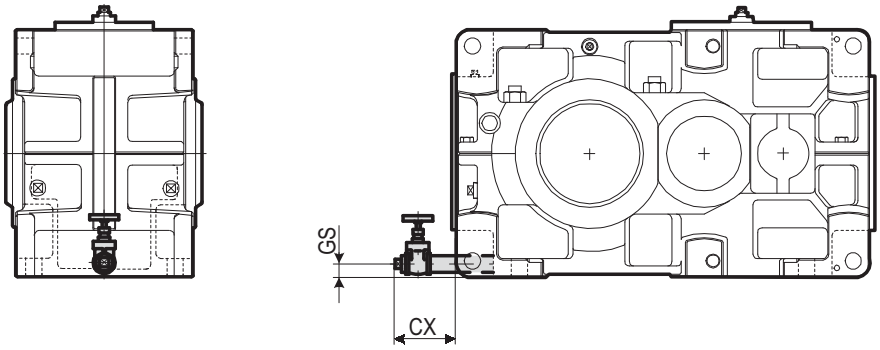

Size	CX	GS
9060	170	31
9065	170	31
9070	155	33
9075	155	33
9080	155	34
9085	157	34

TECHNICAL DATA Option Dimension

9060 ▶ 9085 Right Angle Double, Triple, Quadruple /Parallel Double, Triple, Quadruple

Air Breather

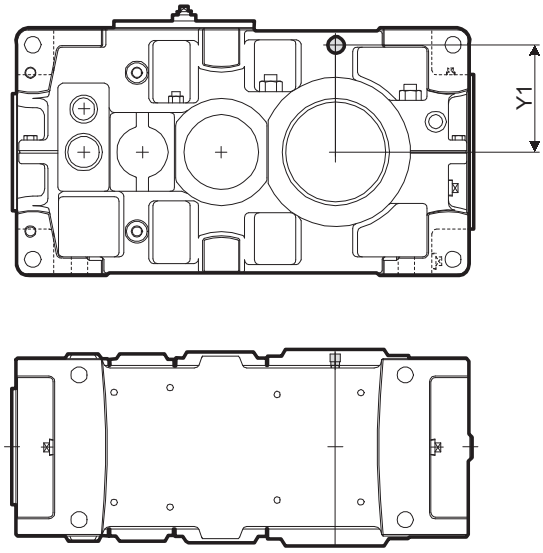

Size	Y1
9060	229
9065	264
9070	263
9075	298
9080	298
9085	338

Oil Level Gauge

Note) Oil level gauge is not max dimension.

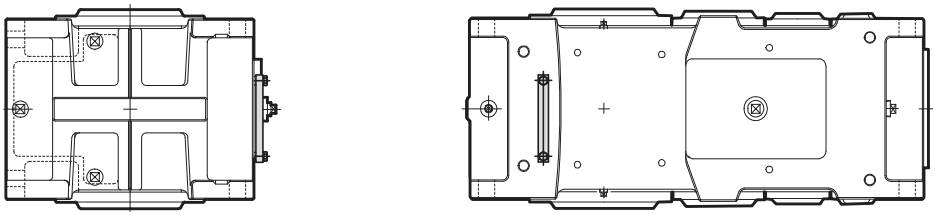

Drain Valve

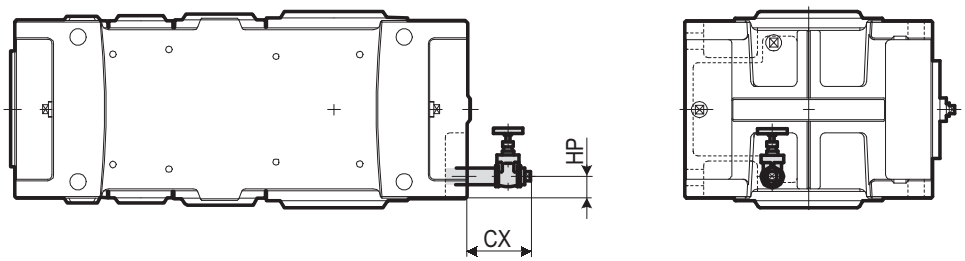

Size	CX	HP
9060	120	47
9065	120	47
9070	120	47
9075	120	47
9080	110	47
9085	110	47

9060 ▶ 9085 Right Angle Double, Triple, Quadruple /Parallel Double, Triple, Quadruple

Air Breather

Size	Y1
9060	234
9065	264
9070	267
9075	302
9080	301
9085	341

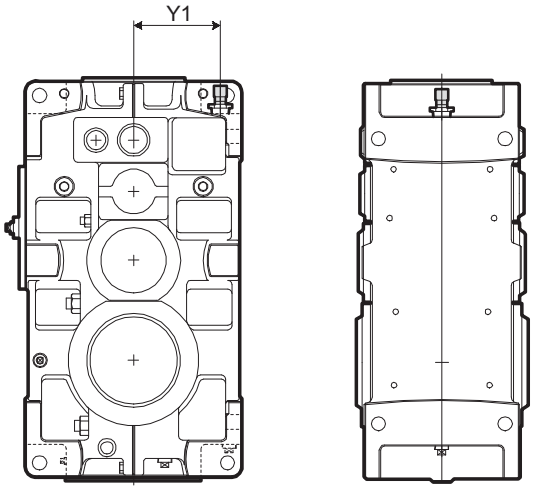

Oil Level Gauge

Note) Oil level gauge is not max dimension.

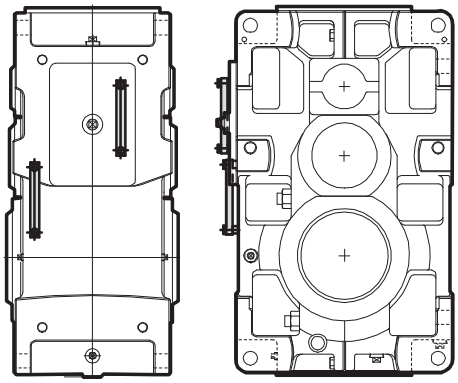

Right Angle Double, Triple / Parallel Double

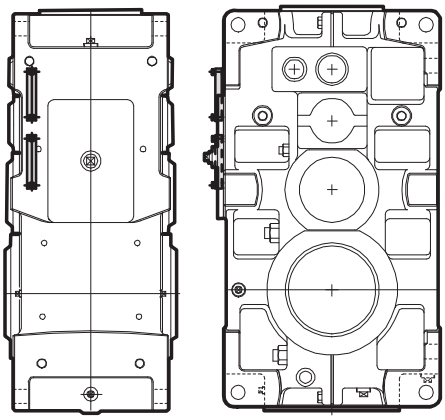

Right Angle Quadruple / Parallel Triple, Quadruple

Drain Valve

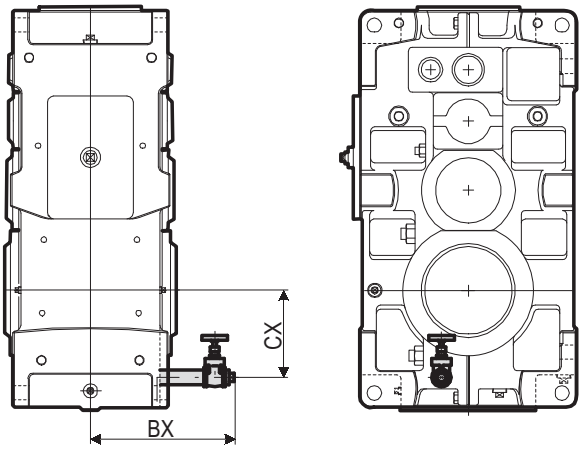

Size	BX	CY
9060	335	214
9065	335	253
9070	360	251
9075	360	298
9080	380	283
9085	380	327

TECHNICAL DATA Option Dimension

9090 ▶ 9115 Right Angle Double, Triple, Quadruple /Parallel Double, Triple, Quadruple

Air Breather

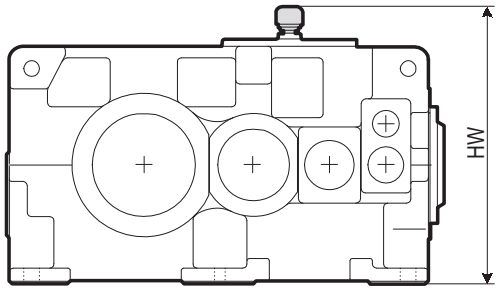

Size	HW
9090	839
9095	889
9100	939
9105	989
9110	1039
9115	1089

Oil Level Gauge

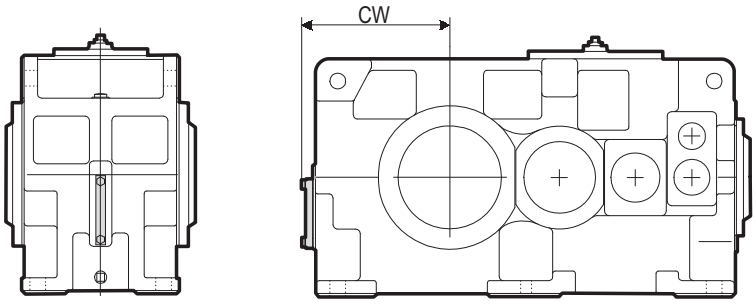

Size	CW
9090	435
9095	465
9100	475
9105	510
9110	525
9115	575

Drain Valve

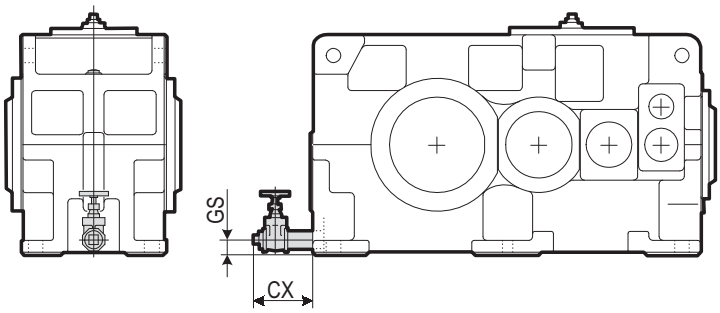

Size	CX	GS
9090	162	45
9095	162	45
9100	162	46
9105	162	46
9110	162	48
9115	162	48

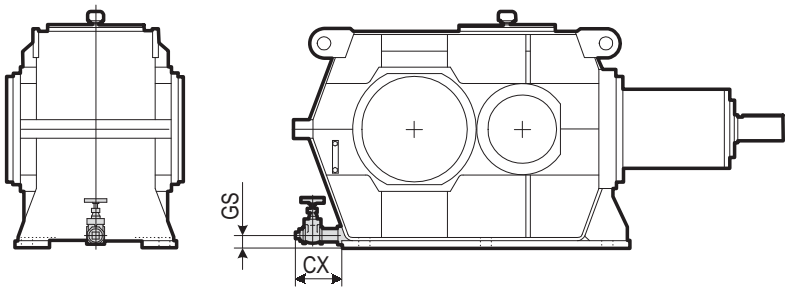

Size	CX	GS
9095R2	172	62
9105R2	172	62
9115R2	172	69

9090 ▶ 9115 Right Angle Double, Triple, Quadruple / Parallel Double, Triple, Quadruple

Air Breather

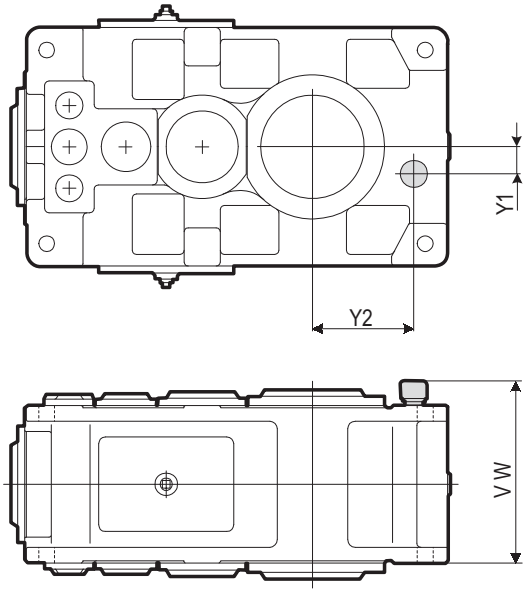

Size	V W	Y1	Y2
9090	626	90	315
9095	626	90	345
9100	706	100	355
9105	706	100	390
9110	766	100	405
9115	766	100	440

Oil Level Gauge

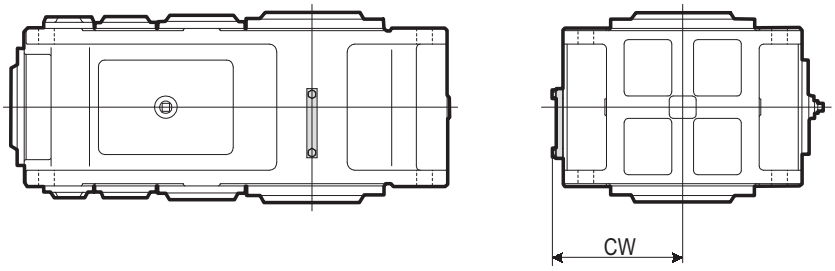

Size	CW
9090	405
9095	430
9100	455
9105	480
9110	505
9115	530

Drain Valve

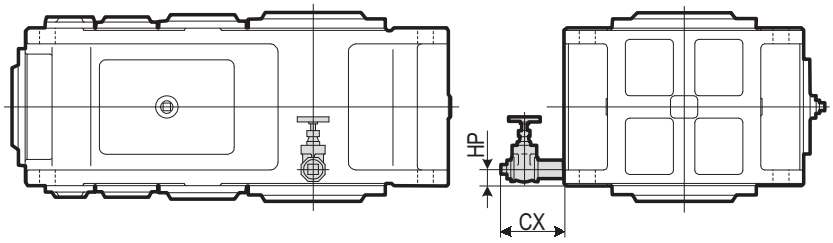

Size	CX	HP
9090	162	42
9095	162	42
9100	162	43
9105	162	43
9110	162	44
9115	162	44

Option

	Standard Specifications	Optional Specifications
Housing	Cast Iron Housing	
Slow / High Speed Shaft	Solid Single-end Shaft Slow Speed Shaft Hollow Shaft (Shrink) Slow Speed Shaft Hollow Shaft (Key)	Solid Both-end Shaft
Bearing		Heavy Duty LSS Bearing
Air Vent	Air Vent	Air Breather
Oil Gauge	Dip Stick Round Gauge	Oil Sight Gauge (Stick Type)
Drain	Drain Plug	Drain Valve
Auxiliary Cooling Unit		Cooling Fan
Hollow Shaft Auxiliary Unit		Torque Arm Mounting & Removal Kit
Coating	Standard Paint (indoor)	Rust-Proof Paint (Acrylic / Epoxy) Anticorrosion Paint (Epoxy / Polyurethane)

Coverage of this catalog - Optional Specifications

Main Parts

Housing

Ductile Iron Housing ····· C-36
Steel Fabricated Housing ····· C-36

Slow / High Speed Shaft

Keeper Plate with Washer ····· C-48
Shaft-End Tapped Hole (LSS) ····· C-51

Seal

Double Shaft Seals (LSS) ····· C-52
FKM Seal ····· C-53
Taconite Seal ····· C-54

Backstop

Internal Backstop ····· C-56

Accessory

Air Vent

Washdown Breather ····· C-60
Anti-Dust Breather ····· C-63
Anti-Humidity Breather ····· C-64

Drain

Stainless Steel Drain Valve ····· C-68

Auxiliary Cooling Unit
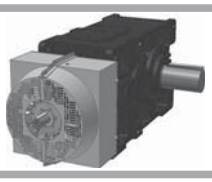
Split Fan Hood (Right Angle Shaft) ····· C-72

Safety Cover
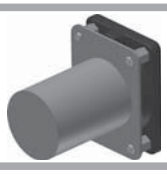
Shaft Cap ····· C-74

External Parts

Instruments / Switches

Oil Flow Switch ····· C-76
Oil Pressure Switch ····· C-77

Option

Recommended Option for Applications

Options		Charactaristics of Applications and Major Applications		
		Large moment applied on slow speed shaft	Moment applied on the slow speed shaft	Dusty environment Rotation in single direction
		Agitator	Aerator	Coal conveyor
Housing	Cast Iron Housing	C	C	C
	Steel Fabricated Housing			C
	Reversible Housing			C
High Speed Shaft	Both-end Shaft			C
Slow Speed Shaft	Both-end Shaft			C
	Keeper Plate with Washer	B	B	B
	Shaft-End Tapped Hole (LSS)	B	B	B
Bearing	Slow Speed Shaft Heavy Load Bearing	C	C	C
Seal	High speed shaft FKM seal	C	C	C
	Slow speed shaft FKM seal	C	C	C
	High speed shaft taconite seal			B
	Slow speed shaft taconite seal			B
Output Base	Drop bearing housing	C	A	
	LS base	B	C	
	Output flange	C		
Backstop	Internal Backstop	C	C	B
Air Vent	Air breather	B	B	C
	Washdown Breather	C	C	C
	Anti-Dust Breather			A
	Anti-Humidity Breather	C	C	
Oil Gauge	Oil Sight Gauge	B	B	B
Drain	Drain valve	B	B	B
	Stainless steel drain valve	C		
Auxiliary Cooling Unit	Cooling fan	C	C	C
	Split fan hood (Right angle shaft)			C
Auxiliary Hollow Shaft	Torque arm			B
	Heavy load torque arm			C
	Mounting / dismounting tools			C
Safety Cover	Shaft cap			B
Base	Motor adaptor	B	B	C
	Baseplate			C
	Heavy load bracket			
Instruments / Switches	Oil Flow Switch	B	B	C
	Oil Pressure Switch	B	B	C
Oil Lubrication	Pump mounted to shaft directly	A	A	
Grease Lubrication	Dry well	A	A	
Paint	Rust-Proof Paint (Epoxy / Acrylic)	A	A	B
	Anticorrosion Paint (Epoxy / Polyurethane)	C	C	C
	Anticorrosive paint on the underside		B	
	Undercoat only	C	C	C
	Paint color specified	C	C	C

: Models shown in this catalog

: Consult us for these models

A: Specification of the base unit as a standard specification
B: Recommended optional specification
C: Option required under some usage conditions

Ductile Iron Housing

Ductile cast iron housing is more durable compared to the standard gray cast iron. It is suitable for applications requiring strength for housing, such as when impact load or upward load is applied on the slow speed shaft.

Specification

- Housing material: Spheroidal graphite cast iron, FCD450
  (Standard housing: Gray cast iron)

Dimension

Same as standard cast iron housing.

Example of Nomenclature

PHA9055R3F - RL - 35.5
|
F: Ductile Cast Iron (FCD) housing

Steel Fabricated Housing

Steel housing is more durable compared to the standard gray cast iron. It is suitable for applications requiring strength for housing, such as when impact load or upward load is applied on the slow speed shaft.

Specification

- Housing material: Rolled steel sheet SS400
  (Standard housing: Gray cast iron)

- Steel housing models come with oil sight gauge and air breather.

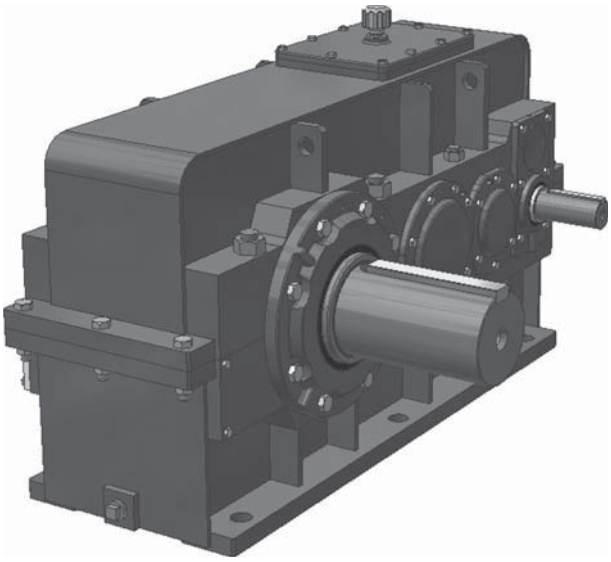

Note:
- Some of dimensions of this housing are different from FC or FCD housing.
- Consult us on the hollow shaft type.

Example of Nomenclature

PHD9055R3A - RL - 35.5
|
A: Steel fabricated housing

Dimension

Horizontal Mounting

PHD9015 ～ 9085 Parallel Shaft Double Stage Reduction

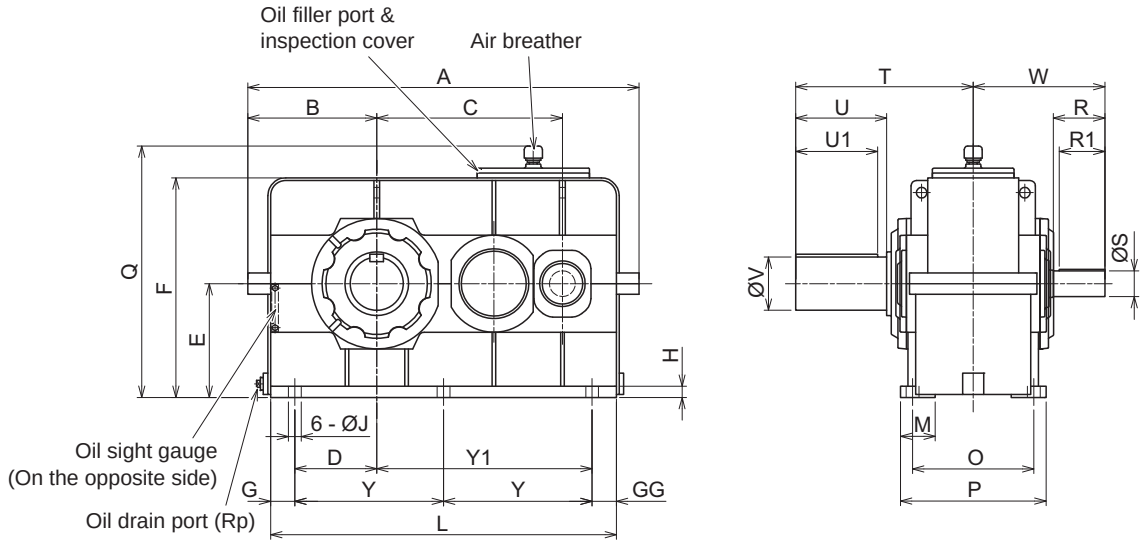

Size	A	B	C	D	E	F	G	GG	H	J	L	Y	Y1	M	O	P	Q
9015	475	175	194	95	135	262	30	30	19	15	375		220	65	185	220	367
9025	530	190	227	105	155	293	35	35	22	19	430		255	70	205	245	398
9030	610	210	264	115	160	316	45	45	25	24	510		305	75	230	275	421
9035	655	225	295	130	185	361	45	45	25	24	555		335	75	230	275	466
9040	685	235	306	140	200	381	45	50	25	28	585		350	85	260	315	486
9045	745	255	345	160	220	431	45	50	25	28	645	275		85	260	315	536
9050	805	275	358	165	210	417	50	55	27	28	685	290		90	290	345	522
9055	865	295	397	185	245	482	50	55	27	28	745	320		90	290	345	587
9060	915	310	414	195	265	510	55	60	29	35	795	340		105	340	410	615
9065	980	330	460	215	300	574	55	55	29	35	860	375		105	340	410	679
9070	1050	345	482	215	300	576	70	70	33	42	930	395		115	380	460	681
9075	1125	370	535	240	335	644	70	75	33	42	1005	430		115	380	460	749
9080	1205	395	556	240	335	644	80	85	37	42	1055	445		115	400	480	749
9085	1290	425	612	270	375	724	80	80	37	42	1140	490		115	400	480	829

Size	High speed shaft					Slow speed shaft					Rp	Approx. mass [kg]	Approx. oil quantity [ℓ]
	W	R	S	R1	Key	T	U	V	U1	Key			
9015	211	80	30k6	70	8 x 7	245	110	58m6	95	18 x 11	3/4"	110	5
9025	226	80	35k6	70	10 x 8	285	140	70m6	125	20 x 12	3/4"	130	7
9030	269	110	40k6	95	12 x 8	330	170	80m6	150	25x 14	1"	185	10
9035	269	110	40k6	95	12 x 8	330	170	90m6	150	25x 14	1"	200	13
9040	284	110	50k6	95	14 x 9	349	170	95m6	150	25x 14	1"	260	17
9045	284	110	50k6	95	14 x 9	391	210	105m6	190	28 x 16	1"	320	21
9050	303	110	55m6	95	16 x 10	411	210	110m6	190	28 x 16	1"	410	24
9055	303	110	55m6	95	16 x 10	411	210	120m6	185	32 x 18	1"	450	31
9060	360	140	65m6	125	18 x 11	440	210	125m6	185	32 x 18	1 1/4"	580	32
9065	360	140	65m6	125	18 x 11	484	250	140m6	225	36 x 20	1 1/4"	665	41
9070	385	140	75m6	125	20 x 12	509	250	145m6	225	36 x 20	1 1/4"	830	47
9075	385	140	75m6	125	20 x 12	562	300	160m6	275	40 x 22	1 1/4"	1030	60
9080	434	170	85m6	150	22 x 14	582	300	165m6	275	40 x 22	1 1/4"	1200	66
9085	434	170	85m6	150	22 x 14	585	300	175m6	270	45 x 25	1 1/4"	1450	84

Unit: mm

Steel Fabricated Housing

Dimension

Horizontal Mounting

PHD9090 ～ 9115 Parallel Shaft Double Stage Reduction

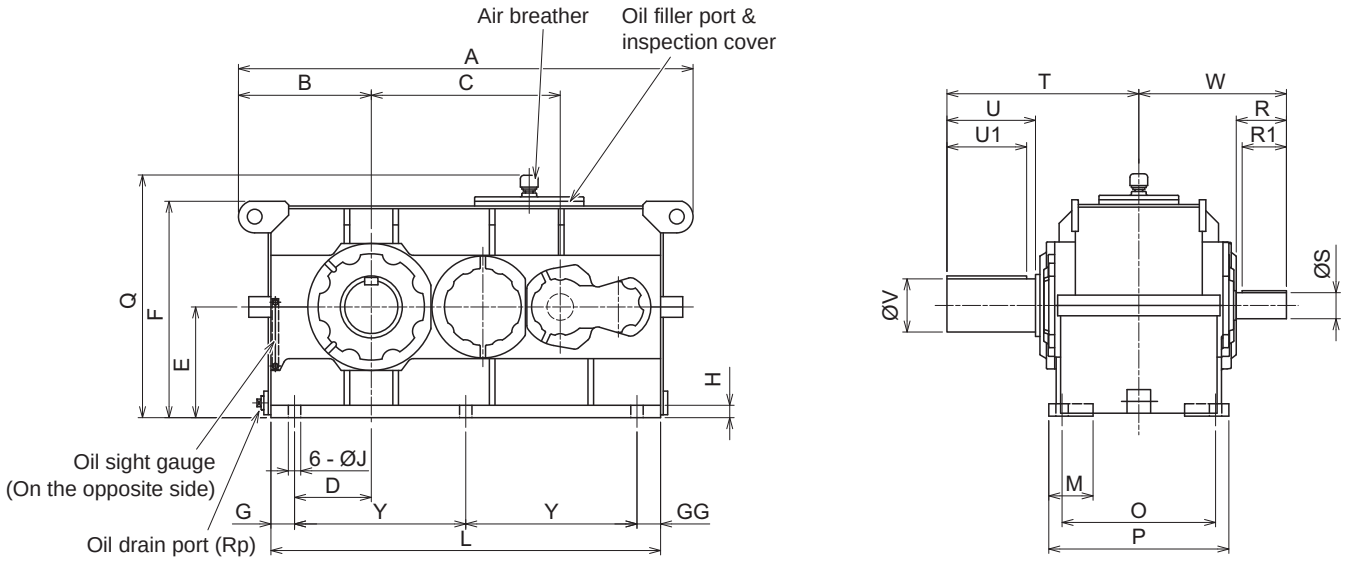

Size	A	B	C	D	E	F	G	GG	H	J	L	Y	M	O	P	Q
9090	1540	450	640	260	375	733	80	80	42	42	1320	580	150	520	610	822
9095	1600	480	670	285	400	783	85	95	42	42	1380	600	150	520	610	872
9100	1710	490	724	290	425	832	90	90	46	48	1490	655	150	570	660	921
9105	1780	525	758	315	450	882	100	100	46	48	1560	680	150	570	660	971
9110	1910	540	824	320	475	928	110	110	50	56	1690	735	165	630	730	1017
9115	2010	590	873	365	500	998	115	115	50	56	1790	780	165	630	730	1087

Size	High speed shaft					Slow speed shaft					Rp	Approx. mass [kg]	Approx. oil quantity [ℓ]
	W	R	S	R1	Key	T	U	V	U1	Key			
9090	500	170	90m6	150	25 x 14	650	300	180m6	270	45 x 25	1 1/2"	2100	100
9095	500	170	90m6	150	25 x 14	700	350	190m6	320	45 x 25	1 1/2"	2300	120
9100	585	210	100m6	190	28 x 16	740	350	200m6	320	45 x 25	1 1/2"	2700	150
9105	585	210	100m6	190	28 x 16	740	350	220m6	320	50 x 28	1 1/2"	3300	170
9110	615	210	110m6	190	28 x 16	770	350	220m6	320	50 x 28	1 1/2"	4000	210
9115	615	210	110m6	190	28 x 16	830	410	240m6	375	56 x 32	1 1/2"	4400	250

Unit: mm

Dimension

Horizontal Mounting

PHD9015 ～ 9085 Parallel Shaft Triple Stage Reduction

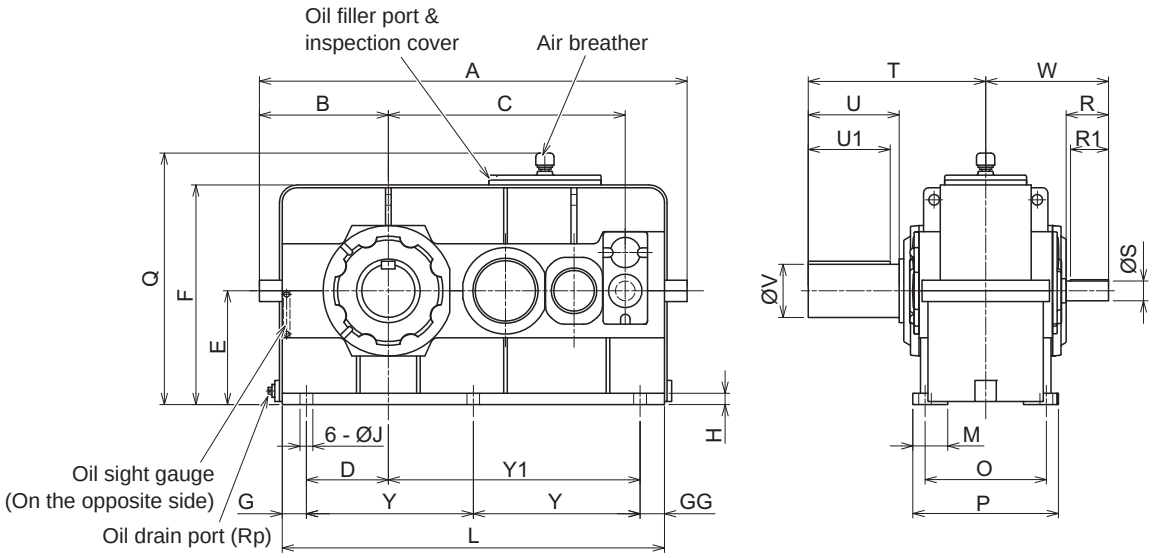

Size	A	B	C	D	E	F	G	GG	H	J	L	Y	Y1	M	O	P	Q
9015	540	175	257	95	135	262	30	30	19	15	440		285	65	185	220	367
9025	605	190	306	105	155	293	35	35	22	19	505		330	70	205	245	398
9030	670	210	343	115	160	316	45	45	25	24	570		365	75	230	275	421
9035	715	225	374	130	185	361	45	50	25	24	615		390	75	230	275	466
9040	770	235	398	140	200	381	45	85	25	28	670		400	85	260	315	486
9045	825	255	437	160	220	431	45	50	25	28	725	315		85	260	315	536
9050	885	275	467	165	210	417	50	85	27	28	765	315		90	290	345	522
9055	945	295	506	185	245	482	50	55	27	28	825	360		90	290	345	587
9060	1005	310	540	195	265	510	55	90	29	35	885	370		105	340	410	615
9065	1070	330	586	215	300	574	55	55	29	35	950	420		105	340	410	679
9070	1145	345	630	215	300	576	70	115	33	42	1025	420		115	380	460	681
9075	1220	370	683	240	335	644	70	70	33	42	1100	480		115	380	460	749
9080	1325	395	725	240	335	644	80	95	37	42	1175	500		115	400	480	749
9085	1410	425	781	270	375	724	80	80	37	42	1260	550		115	400	480	829

Size	High speed shaft					Slow speed shaft					Rp	Approx. mass [kg]	Approx. oil quantity [ℓ]
	W	R	S	R1	Key	T	U	V	U1	Key			
9015	190	60	25k6	50	8 x 7	245	110	58m6	95	18 x 11	3/4"	110	6
9025	204	60	28k6	50	8 x 7	285	140	70m6	125	20 x 12	3/4"	160	9
9030	241	80	30k6	70	8 x 7	330	170	80m6	150	25x 14	1"	200	11
9035	241	80	30k6	70	8 x 7	330	170	90m6	150	25x 14	1"	215	15
9040	256	80	35k6	70	10 x 8	349	170	95m6	150	25x 14	1"	285	20
9045	256	80	35k6	70	10 x 8	391	210	105m6	190	28 x 16	1"	350	25
9050	304	110	40k6	95	12 x 8	411	210	110m6	190	28 x 16	1"	440	28
9055	304	110	40k6	95	12 x 8	411	210	120m6	185	32 x 18	1"	485	36
9060	329	110	50k6	95	14 x 9	440	210	125m6	185	32 x 18	1 1/4"	630	41
9065	329	110	50k6	95	14 x 9	484	250	140m6	225	36 x 20	1 1/4"	720	51
9070	354	110	55m6	95	16 x 10	509	250	145m6	225	36 x 20	1 1/4"	900	60
9075	354	110	55m6	95	16 x 10	562	300	160m6	275	40 x 22	1 1/4"	1120	74
9080	405	140	65m6	125	18 x 11	582	300	165m6	275	40 x 22	1 1/4"	1300	82
9085	405	140	65m6	125	18 x 11	585	300	175m6	270	45 x 25	1 1/4"	1560	102

Unit: mm

Steel Fabricated Housing

Dimension

Horizontal Mounting

PHD9090 ～ 9115 Parallel Shaft Triple Stage Reduction

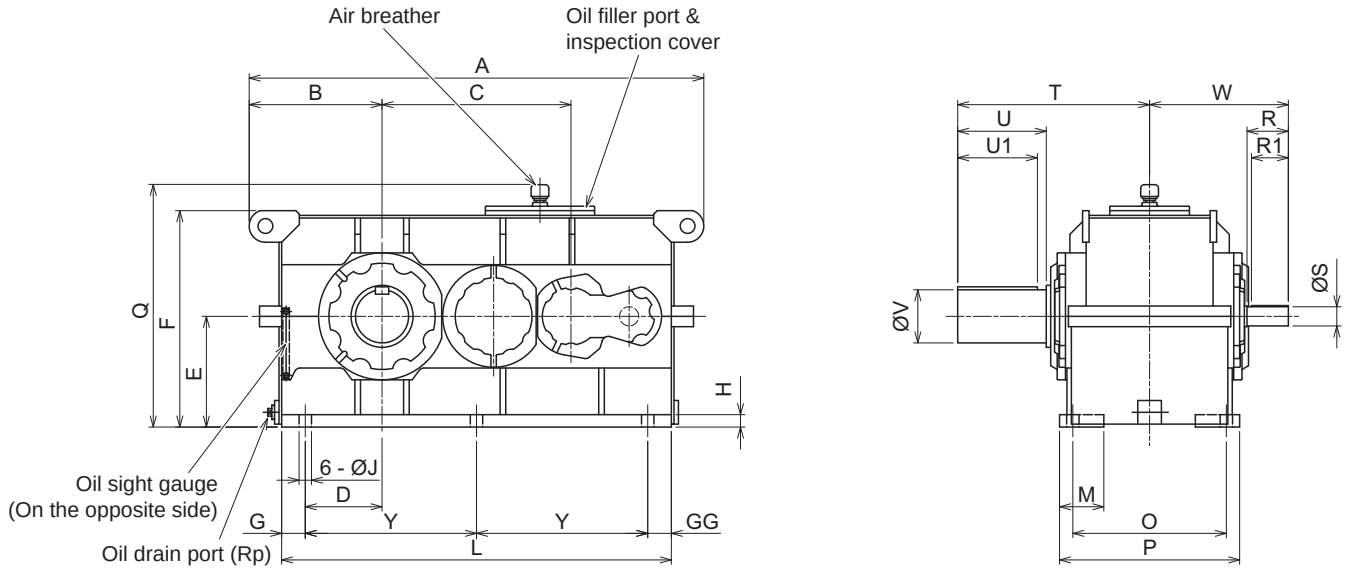

Size	A	B	C	D	E	F	G	GG	H	J	L	Y	M	O	P	Q
9090	1540	450	837	260	375	733	80	80	42	42	1320	580	150	520	610	822
9095	1600	480	867	285	400	783	85	95	42	42	1380	600	150	520	610	872
9100	1710	490	950	290	425	832	90	90	46	48	1490	655	150	570	660	921
9105	1780	525	984	315	450	882	100	100	46	48	1560	680	150	570	660	971
9110	1910	540	1050	320	475	928	110	110	50	56	1690	735	165	630	730	1017
9115	2010	590	1099	365	500	998	115	115	50	56	1790	780	165	630	730	1087

Size	High speed shaft					Slow speed shaft					Rp	Approx. mass [kg]	Approx. oil quantity [ℓ]
	W	R	S	R1	Key	T	U	V	U1	Key			
9090	470	140	65m6	125	18 x 11	650	300	180m6	270	45 x 25	1 1/2"	2100	100
9095	470	140	65m6	125	18 x 11	700	350	190m6	320	45 x 25	1 1/2"	2400	130
9100	515	140	75m6	125	20 x 12	740	350	200m6	320	45 x 25	1 1/2"	2800	150
9105	515	140	75m6	125	20 x 12	740	350	220m6	320	50 x 28	1 1/2"	3300	190
9110	575	170	80m6	150	22 x 14	770	350	220m6	320	50 x 28	1 1/2"	4000	220
9115	575	170	80m6	150	22 x 14	830	410	240m6	375	56 x 32	1 1/2"	4500	280

Unit: mm

Dimension

Horizontal Mounting

PHD9030 ～ 9085 Parallel Shaft Quadruple Stage Reduction

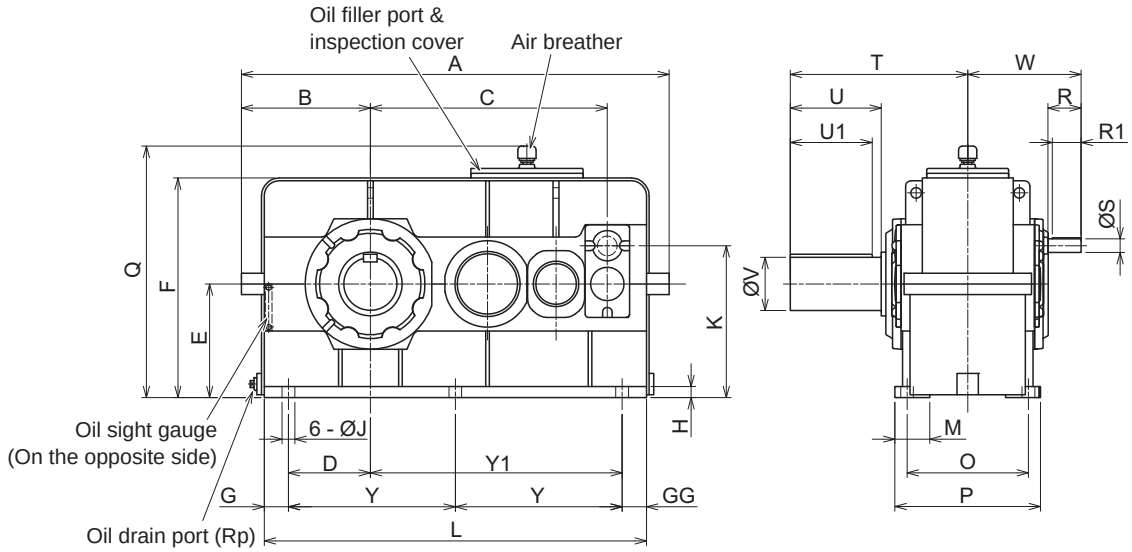

Size	A	B	C	D	E	F	G	GG	H	J	K	L	Y	Y1	M	O	P	Q
9030	670	210	343	115	160	316	45	45	25	24	223	570		365	75	230	275	421
9035	715	225	374	130	185	361	45	50	25	24	248	615		390	75	230	275	466
9040	770	235	398	140	200	381	45	85	25	28	279	670		400	85	260	315	486
9045	825	255	437	160	220	431	45	50	25	28	299	725	315		85	260	315	536
9050	885	275	467	165	210	417	50	85	27	28	289	765	315		90	290	345	522
9055	945	295	506	185	245	482	50	55	27	28	324	825	360		90	290	345	587
9060	1005	310	540	195	265	510	55	90	29	35	357	885	370		105	340	410	615
9065	1070	330	586	215	300	574	55	55	29	35	392	950	420		105	340	410	679
9070	1145	345	630	215	300	576	70	115	33	42	409	1025	420		115	380	460	681
9075	1220	370	683	240	335	644	70	70	33	42	444	1100	480		115	380	460	749
9080	1325	395	725	240	335	644	80	95	37	42	461	1175	500		115	400	480	749
9085	1410	425	781	270	375	724	80	80	37	42	501	1260	550		115	400	480	829

Size	High speed shaft					Slow speed shaft					Rp	Approx. mass [kg]	Approx. oil quantity [ℓ]
	W	R	S	R1	Key	T	U	V	U1	Key			
9030	219	60	25k6	50	8 x 7	330	170	80m6	150	22 x 14	1"	205	17
9035	219	60	25k6	50	8 x 7	330	170	90m6	150	25 x 14	1"	220	21
9040	235	60	28k6	50	8 x 7	349	170	95m6	150	25 x 14	1"	290	29
9045	235	60	28k6	50	8 x 7	391	210	105m6	190	28 x 16	1"	350	34
9050	275	80	30k6	70	8 x 7	411	210	110m6	190	28 x 16	1"	440	39
9055	275	80	30k6	70	8 x 7	411	210	120m6	185	32 x 18	1"	490	48
9060	301	80	35k6	70	10 x 8	440	210	125m6	185	32 x 18	1 1/4"	625	46
9065	301	80	35k6	70	10 x 8	484	250	140m6	225	36 x 20	1 1/4"	720	57
9070	354	110	40k6	95	12 x 8	509	250	145m6	225	36 x 20	1 1/4"	905	69
9075	354	110	40k6	95	12 x 8	562	300	160m6	275	40 x 22	1 1/4"	1120	84
9080	374	110	45k6	95	14 x 9	582	300	165m6	275	40 x 22	1 1/4"	1300	94
9085	374	110	45k6	95	14 x 9	585	300	175m6	270	45 x 25	1 1/4"	1560	115

Unit: mm

Steel Fabricated Housing

Dimension

Horizontal Mounting

PHD9090 ～ 9115 Parallel Shaft Quadruple Stage Reduction

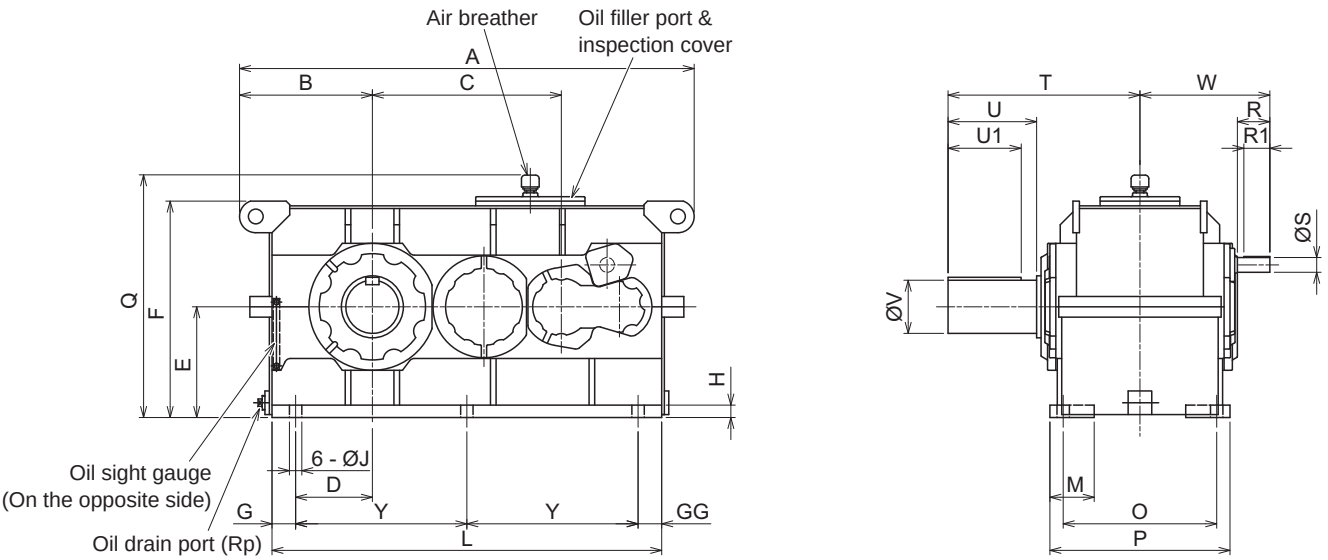

Size	A	B	C	D	E	F	G	GG	H	J	K	L	Y	M	O	P	Q
9090	1540	450	795	260	375	733	80	80	42	42	517	1320	580	150	520	610	822
9095	1600	480	825	285	400	783	85	95	42	42	542	1380	600	150	520	610	872
9100	1710	490	901	290	425	832	90	90	46	48	587	1490	655	150	570	660	921
9105	1780	525	935	315	450	882	100	100	46	48	612	1560	680	150	570	660	971
9110	1910	540	1001	320	475	928	110	110	50	56	637	1690	735	165	630	730	1017
9115	2010	590	1050	365	500	998	115	115	50	56	662	1790	780	165	630	730	1087

Size	High speed shaft					Slow speed shaft					Rp	Approx. mass [kg]	Approx. oil quantity [ℓ]
	W	R	S	R1	Key	T	U	V	U1	Key			
9090	440	110	50k6	95	14 x 9	650	300	180m6	270	45 x 25	1 1/2"	2200	130
9095	440	110	50k6	95	14 x 9	700	350	190m6	320	45 x 25	1 1/2"	2400	150
9100	515	140	60m6	125	18 x 11	740	350	200m6	320	45 x 25	1 1/2"	2800	190
9105	515	140	60m6	125	18 x 11	740	350	220m6	320	50 x 28	1 1/2"	3400	220
9110	545	140	60m6	125	18 x 11	770	350	220m6	320	50 x 28	1 1/2"	4100	260
9115	545	140	60m6	125	18 x 11	830	410	240m6	375	56 x 32	1 1/2"	4500	310

Unit: mm

Dimension

Horizontal Mounting

PHD9030 ～ 9085 Right Angle Shaft Triple Stage Reduction

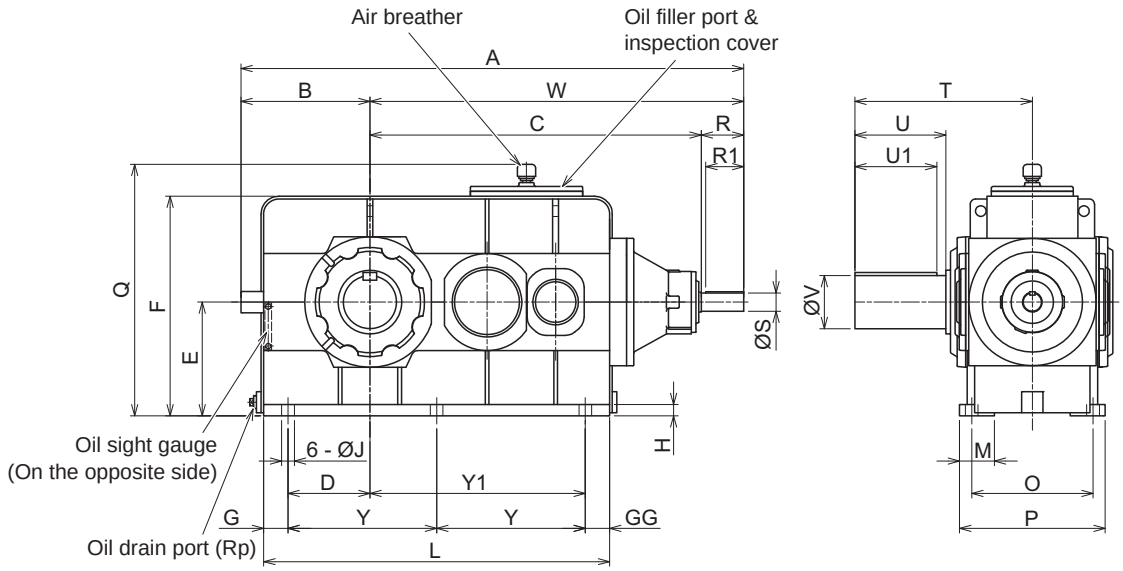

Size	A	B	C	D	E	F	G	GG	H	J	L	Y	Y1	M	O	P	Q
9030	866	210	576	115	160	316	45	45	25	24	510		305	75	230	275	421
9035	912	225	607	130	185	361	45	45	25	24	555		335	75	230	275	466
9040	951	235	636	140	200	381	45	50	25	28	585		350	85	260	315	486
9045	1010	255	675	160	220	431	45	50	25	28	645	275		85	260	315	536
9050	1083	275	728	165	210	417	50	55	27	28	685	290		90	290	345	522
9055	1142	295	767	185	245	482	50	55	27	28	745	320		90	290	345	587
9060	1249	310	829	195	265	510	55	60	29	35	795	340		105	340	410	615
9065	1315	330	875	215	300	574	55	55	29	35	860	375		105	340	410	679
9070	1372	345	917	215	300	576	70	70	33	42	930	395		115	380	460	681
9075	1450	370	970	240	335	644	70	75	33	42	1005	430		115	380	460	749
9080	1571	395	1036	240	335	644	80	85	37	42	1055	445		115	400	480	749
9085	1657	425	1092	270	375	724	80	80	37	42	1140	490		115	400	480	829

Size	High speed shaft					Slow speed shaft					Rp	Approx. mass [kg]	Approx. oil quantity [ℓ]
	W	R	S	R1	Key	T	U	V	U1	Key			
9030	656	80	28k6	70	8 x 7	330	170	80m6	150	25x 14	1"	205	10
9035	687	80	28k6	70	8 x 7	330	170	90m6	150	25x 14	1"	220	13
9040	716	80	30k6	70	8 x 7	349	170	95m6	150	25x 14	1"	290	17
9045	755	80	30k6	70	8 x 7	391	210	105m6	190	28 x 16	1"	350	21
9050	808	80	35k6	70	10 x 8	411	210	110m6	190	28 x 16	1"	440	24
9055	847	80	35k6	70	10 x 8	411	210	120m6	185	32 x 18	1"	490	31
9060	939	110	45k6	95	14 x 9	440	210	125m6	185	32 x 18	1 1/4"	650	36
9065	985	110	45k6	95	14 x 9	484	250	140m6	225	36 x 20	1 1/4"	730	46
9070	1027	110	50k6	95	14 x 9	509	250	145m6	225	36 x 20	1 1/4"	925	54
9075	1080	110	50k6	95	14 x 9	562	300	160m6	275	40 x 22	1 1/4"	1140	67
9080	1176	140	60m6	125	18 x 11	582	300	165m6	275	40 x 22	1 1/4"	1330	73
9085	1232	140	60m6	125	18 x 11	585	300	175m6	270	45 x 25	1 1/4"	1580	92

Unit: mm

Steel Fabricated Housing

Dimension

Horizontal Mounting

PHD9090 ～ 9115 Right Angle Shaft Triple Stage Reduction

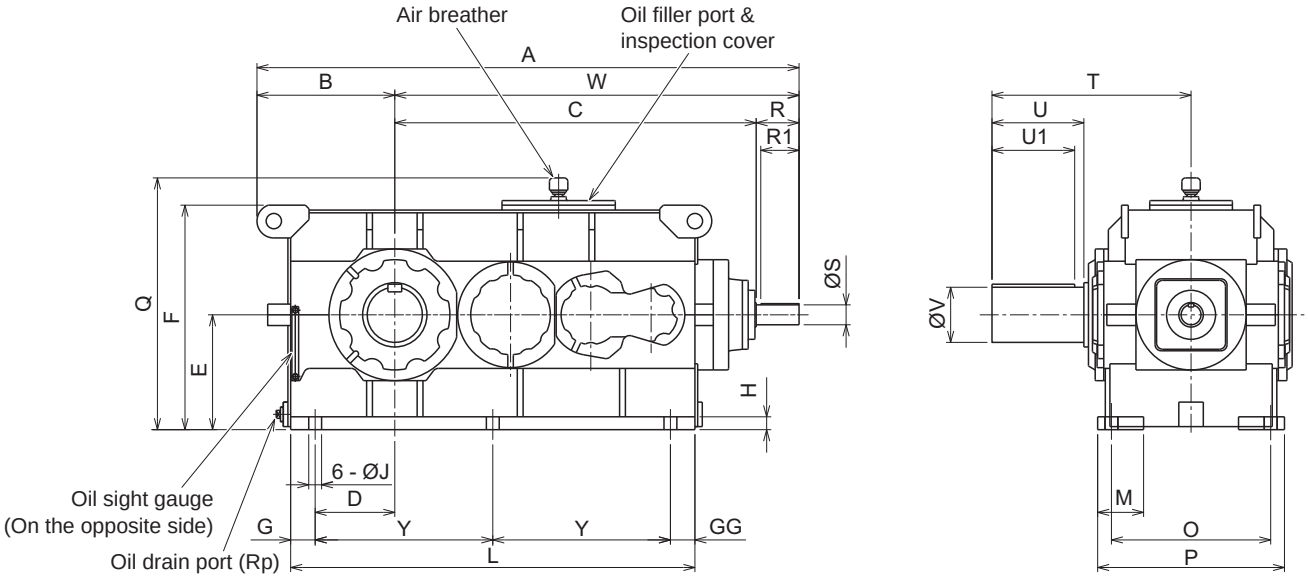

Size	A	B	C	D	E	F	G	GG	H	J	L	Y	M	O	P	Q
9090	1770	450	1180	260	375	733	80	80	42	42	1320	580	150	520	610	822
9095	1830	480	1210	285	400	783	85	95	42	42	1380	600	150	520	610	872
9100	1964	490	1334	290	425	832	90	90	46	48	1490	655	150	570	660	921
9105	2033	525	1368	315	450	882	100	100	46	48	1560	680	150	570	660	971
9110	2224	540	1514	320	475	928	110	110	50	56	1690	735	165	630	730	1017
9115	2323	590	1563	365	500	998	115	115	50	56	1790	780	165	630	730	1087

Size	High speed shaft					Slow speed shaft					Rp	Approx. mass [kg]	Approx. oil quantity [ℓ]
	W	R	S	R1	Key	T	U	V	U1	Key			
9090	1320	140	65m6	125	18 x 11	650	300	180m6	270	45 x 25	1 1/2"	2200	100
9095	1350	140	65m6	125	18 x 11	700	350	190m6	320	45 x 25	1 1/2"	2400	130
9100	1474	140	75m6	125	20 x 12	740	350	200m6	320	45 x 25	1 1/2"	2900	150
9105	1508	140	75m6	125	20 x 12	740	350	220m6	320	50 x 28	1 1/2"	3400	190
9110	1684	170	80m6	150	22 x 14	770	350	220m6	320	50 x 28	1 1/2"	4200	210
9115	1733	170	80m6	150	22 x 14	830	410	240m6	375	56 x 32	1 1/2"	4600	260

Unit: mm

Dimension

Horizontal Mounting

PHD9040 ～ 9085 Right Angle Shaft Quadruple Stage Reduction

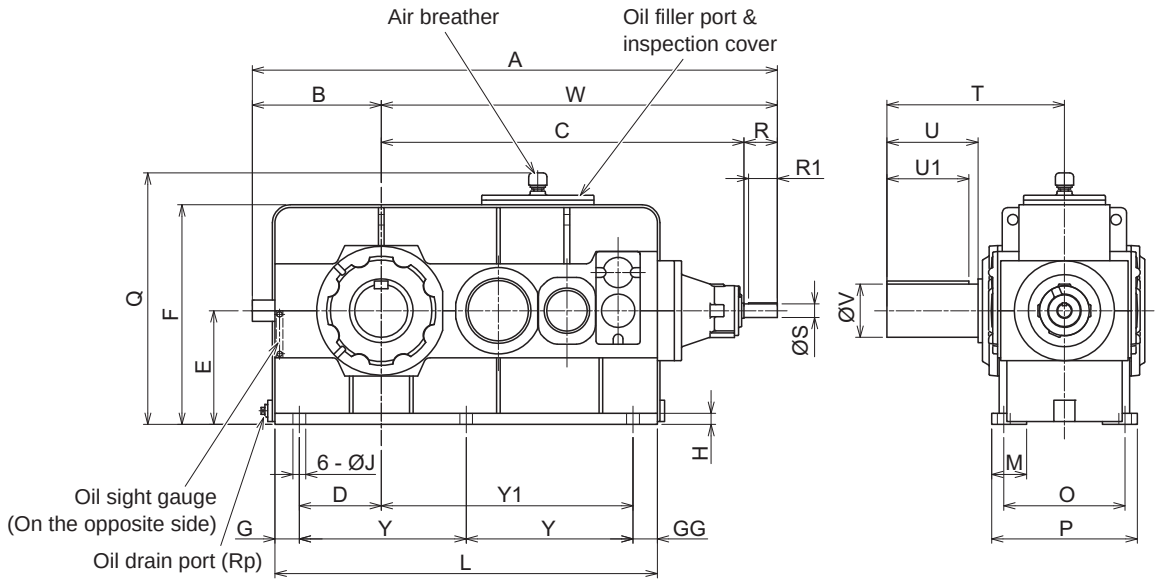

Size	A	B	C	D	E	F	G	GG	H	J	L	Y	Y1	M	O	P	Q
9040	1025	235	710	140	200	381	45	85	25	28	670		400	85	260	315	486
9045	1084	255	749	160	220	431	45	50	25	28	725	315		85	260	315	536
9050	1134	275	779	165	210	417	50	85	27	28	765	315		90	290	345	522
9055	1193	295	818	185	245	482	50	55	27	28	825	360		90	290	345	587
9060	1260	310	870	195	265	510	55	90	29	35	885	370		105	340	410	615
9065	1326	330	916	215	300	574	55	55	29	35	950	420		105	340	410	679
9070	1425	345	1000	215	300	576	70	115	33	42	1025	420		115	380	460	681
9075	1503	370	1053	240	335	644	70	70	33	42	1100	480		115	380	460	749
9080	1645	395	1140	240	335	644	80	95	37	42	1175	500		115	400	480	749
9085	1731	425	1196	270	375	724	80	80	37	42	1260	550		115	400	480	829

Size	High speed shaft					Slow speed shaft					Rp	Approx. mass [kg]	Approx. oil quantity [ℓ]
	W	R	S	R1	Key	T	U	V	U1	Key			
9040	790	80	28k6	70	8 x 7	349	170	95m6	150	25 x 14	1"	310	20
9045	829	80	28k6	70	8 x 7	391	210	105m6	190	28 x 16	1"	375	25
9050	859	80	28k6	70	8 x 7	411	210	110m6	190	28 x 16	1"	460	28
9055	898	80	28k6	70	8 x 7	411	210	120m6	185	32 x 18	1"	505	36
9060	950	80	30k6	70	8 x 7	440	210	125m6	185	32 x 18	1 1/4"	950	47
9065	996	80	30k6	70	8 x 7	484	250	140m6	225	36 x 20	1 1/4"	740	58
9070	1080	80	35k6	70	10 x 8	509	250	145m6	225	36 x 20	1 1/4"	930	70
9075	1133	80	35k6	70	10 x 8	562	300	160m6	275	40 x 22	1 1/4"	1150	85
9080	1250	110	45k6	95	14 x 9	582	300	165m6	275	40 x 22	1 1/4"	1350	96
9085	1306	110	45k6	95	14 x 9	585	300	175m6	270	45 x 25	1 1/4"	1620	117

Unit: mm

Steel Fabricated Housing

Dimension

Horizontal Mounting

PHD9090 ～ 9115 Right Angle Shaft Quadruple Stage Reduction

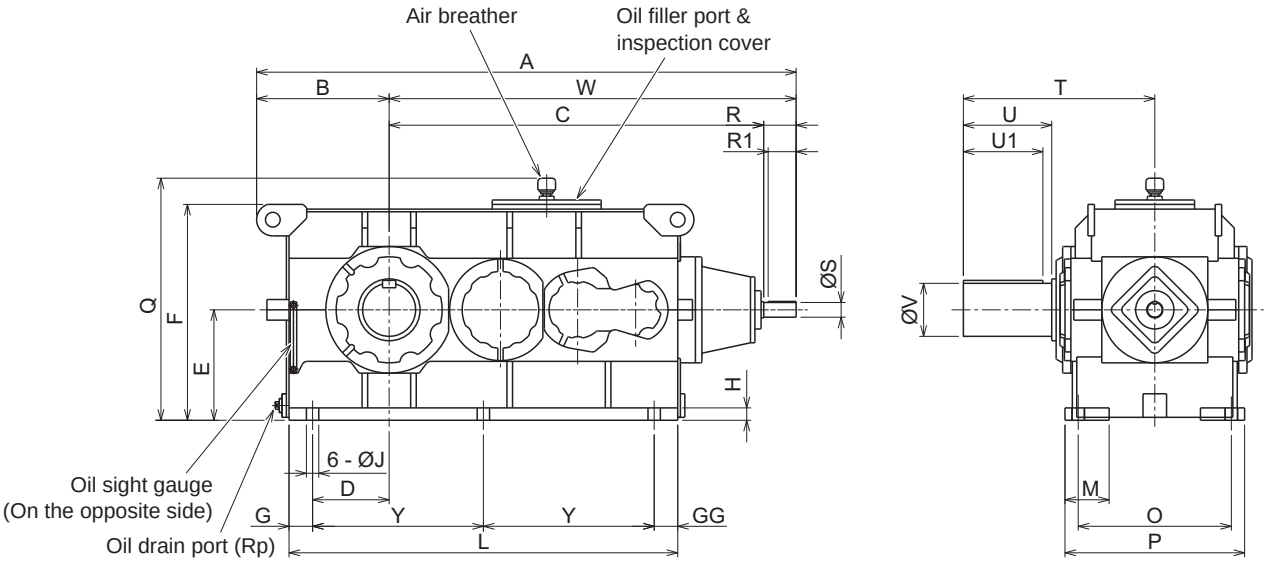

Size	A	B	C	D	E	F	G	GG	H	J	L	Y	M	O	P	Q
9090	1832	450	1272	260	375	733	80	80	42	42	1320	580	150	520	610	822
9095	1892	480	1302	285	400	783	85	95	42	42	1380	600	150	520	610	872
9100	2060	490	1430	290	425	832	90	90	46	48	1490	655	150	570	660	921
9105	2129	525	1464	315	450	882	100	100	46	48	1560	680	150	570	660	971
9110	2210	540	1530	320	475	928	110	110	50	56	1690	735	165	630	730	1017
9115	2309	590	1579	365	500	998	115	115	50	56	1790	780	165	630	730	1087

Size	High speed shaft					Slow speed shaft					Rp	Approx. mass [kg]	Approx. oil quantity [ℓ]
	W	R	S	R1	Key	T	U	V	U1	Key			
9090	1382	110	50k6	95	14 x 9	650	300	180m6	270	45 x 25	1 1/2"	2200	130
9095	1412	110	50k6	95	14 x 9	700	350	190m6	320	45 x 25	1 1/2"	2400	150
9100	1570	140	60m6	125	18 x 11	740	350	200m6	320	45 x 25	1 1/2"	2900	180
9105	1604	140	60m6	125	18 x 11	740	350	220m6	320	50 x 28	1 1/2"	3400	220
9110	1670	140	60m6	125	18 x 11	770	350	220m6	320	50 x 28	1 1/2"	4100	260
9115	1719	140	60m6	125	18 x 11	830	410	240m6	375	56 x 32	1 1/2"	4500	310

Unit: mm

Keeper Plate with Washer

Keeper plate is for retaining the high speed shaft, slow speed shaft, etc. It is attached when mounting coupling and gears.

Specification

- There is a standard keeper plate for each shaft size.
- Keeper plate of high speed shaft is fixed by used by affixing a bolt by bending a retaining washer along the keyway.
- Keeper plate of slow speed shaft is used by affixing two bolts by bending a retaining washer.

Note: ・Key length is shorter than the standard models for keeper plate on a high speed shaft. This is because the retaining washer is bent along the keyway.
・Two tap holes are added on the shaft end for keeper plate on slow speed shaft.

Dimension

High speed shaft keeper plate (1 bolt)

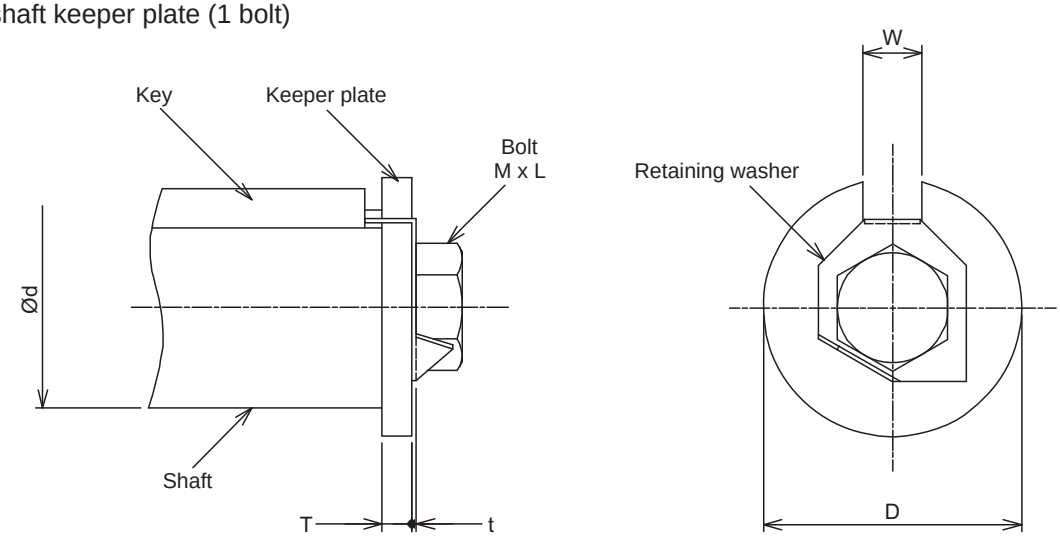

Shaft diameter d	Outer diameter D	Keyway width W	Thickness T	Thickness t	Nominal bolt diameter x Screw length M × L		Reduced key length
25	35	8	5	0.8	M10	25	5
28	35	8	5	0.8	M10	25	5
30	35	8	5	0.8	M10	25	5
35	45	10	5	0.8	M12	30	5
40 (a)	50	12	5	1.2	M16	40	5
40 (b)	50	14	6	1.2	M16	40	5
45	60	14	8	1.2	M16	40	5
50	60	14	8	1.2	M16	40	5
55	70	16	8	1.2	M20	45	5
58	75	18	8	1.2	M20	45	5
60	75	18	8	1.2	M20	45	5
65	75	18	8	1.2	M20	45	5
70	90	20	8	1.2	M20	45	5
75	90	20	8	1.2	M20	45	5
80	100	22	8	1.2	M20	45	5
85	100	22	8	1.2	M20	45	5
90	110	25	10	1.6	M24	55	6
95	120	25	10	1.6	M24	55	6
100	120	28	10	1.6	M24	55	6
105	130	28	10	1.6	M24	55	6
110	140	28	10	1.6	M24	55	6
120	140	32	10	1.6	M24	55	6
125	150	32	10	1.6	M24	55	6
130	160	32	10	1.6	M24	55	6

Refer to the shaft diameter table for the suitable reducer size that corresponds to a specific shaft diameter. Unit: mm

Keeper Plate with Washer

High speed shaft diameter

Size	P2	P3	P4	R2	R3	R4
9015	30	25	-	28	-	-
9025	35	28	-	35	-	-
9030	40 (a)	30	25	40 (b)	28	-
9035	40 (a)	30	25	40 (b)	28	-
9040	50	35	28	45	30	28
9045	50	35	28	45	30	28
9050	55	40 (a)	30	50	35	28
9055	55	40 (a)	30	50	35	28
9060	65	50	35	60	45	30
9065	65	50	35	60	45	30
9070	75	55	40 (a)	65	50	35
9075	75	55	40 (a)	65	50	35
9080	85	65	45	75	60	45
9085	85	65	45	75	60	45
9090	90	65	50	-	65	50
9095	90	65	50	90	65	50
9100	100	75	60	-	75	60
9105	100	75	60	100	75	60
9110	110	80	60	-	85	60
9115	110	80	60	110	85	60

Unit: mm

Keeper Plate with Washer

Dimension

Slow speed shaft keeper plate (2 bolts)

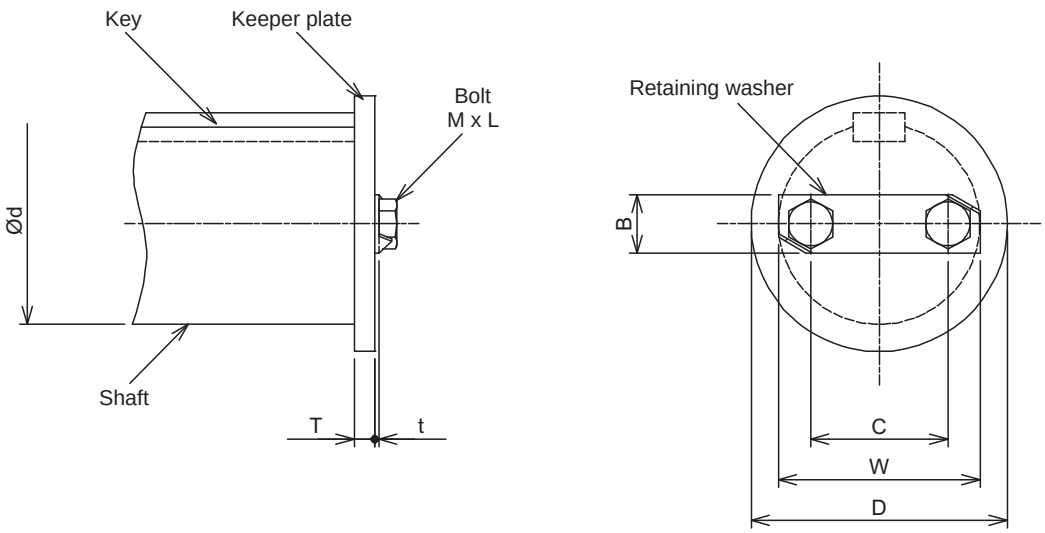

Size	Shaft diameter d	Pitch C	Outer diameter D	Thickness T	W	B	Thickness t	Nominal bolt diameter x Screw length M × L	
9015	58	42	75	9	65	25	0.8	M10	25
9025	70	46	85	9	75	25	0.8	M12	30
9030	80	50	100	9	77	25	0.8	M12	30
9035	90	55	105	9	85	25	1.2	M12	30
9040	95	60	120	12	95	32	1.2	M16	40
9045	105	60	120	12	95	32	1.2	M16	40
9050	110	75	140	12	110	32	1.2	M16	40
9055	120	75	140	12	110	32	1.2	M16	40
9060	125	85	150	16	130	40	1.2	M20	50
9065	140	95	175	16	140	40	1.2	M20	50
9070	145	95	175	16	140	40	1.2	M20	50
9075	160	110	190	16	155	40	1.2	M20	50
9080	165	110	190	16	155	40	1.2	M20	50
9085	175	130	210	16	175	40	1.2	M20	50
9090	180	130	210	16	175	40	1.2	M20	50
9095	190	140	220	16	185	40	1.2	M20	50
9100	200	145	230	16	197	48	1.2	M24	55
9105	220	165	250	16	217	48	1.2	M24	55
9110	220	165	250	16	217	48	1.2	M24	55
9115	240	180	270	16	232	48	1.2	M24	55
9118	260	190	290	18	254	55	1.6	M30	75
9121	280	200	310	18	264	55	1.6	M30	75
9126	300	220	330	18	284	55	1.6	M30	75
9128	320	200	350	21	272	64	1.6	M36	90
9131	340	215	370	21	287	64	1.6	M36	90
9136	360	230	390	21	302	64	1.6	M36	90

Unit: mm

Shaft-End Tapped Hole (LSS)

Shaft end tap on LSS end is to fix keeper plate etc. using two bolts.

Specification

- This adds two tap holes to the end of a standard low speed shaft, which has one tap hole at the center.

Dimension

Slow speed shaft

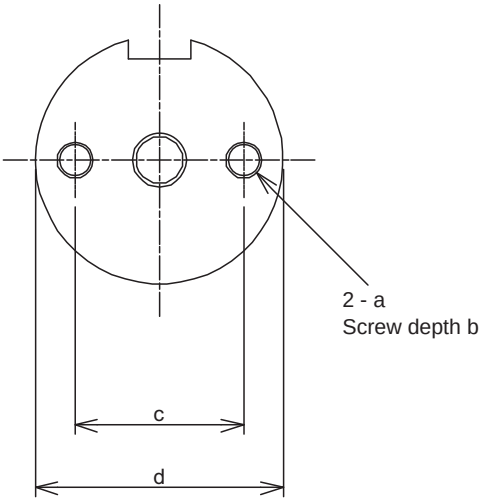

Size	d	a	b	c
9015	58	M10	20	42
9025	70	M12	25	46
9030	80	M12	25	50
9035	90	M12	25	55
9040	95	M16	30	60
9045	105	M16	30	60
9050	110	M16	30	75
9055	120	M16	30	75
9060	125	M20	38	85
9065	140	M20	38	95
9070	145	M20	38	95
9075	160	M20	38	110
9080	165	M20	38	110
9085	175	M20	38	130
9090	180	M20	38	130
9095	190	M20	38	140
9100	200	M24	45	145
9105	220	M24	45	165
9110	220	M24	45	165
9115	240	M24	45	180

Unit: mm

Double Shaft Seals (LSS)

Oil seal may be doubled in applications where oil leakage may have severe impact on production or the environment. Use of double oil seal enhance the reliability of the oil leakage prevention.

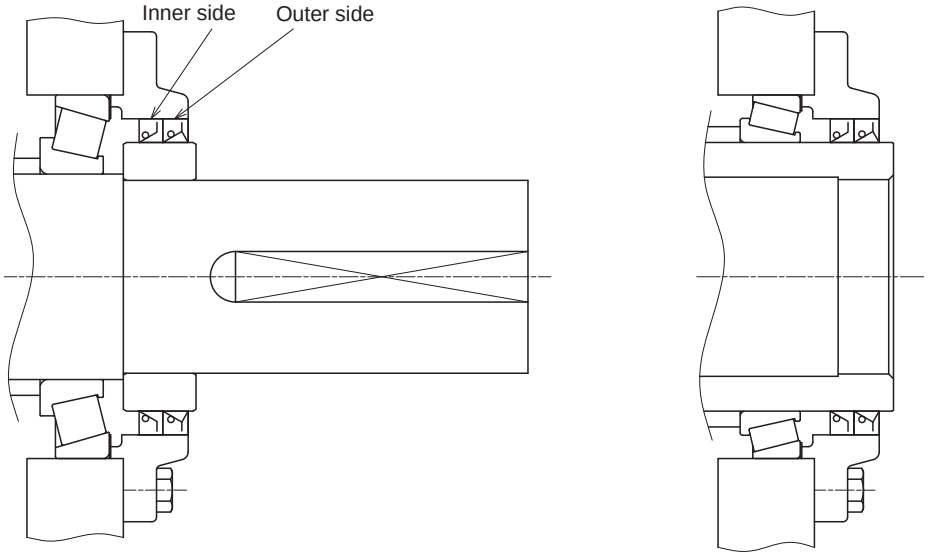

Solid Shaft　　Hollow Shaft

Specification

- This specification comes with double nitrile rubber oil seal.
- The optional double oil seals on slow speed shaft is available for the combinations marked with “S” in the table below.

Note: ・ Double oil seal on the slow speed shaft is standard for quadruple stage reduction horizontal mounting models, vertical mounting slow speed shaft models facing the bottom, and upright models.
・ Double oil seal is used only for the seal at the bottom for vertical mounting hollow shaft models.

Standard specifications of slow speed shaft oil seal

Installation	Number of reduction stage	Right angle shaft						Parallel shaft								
		RL	RR	RB	LR	LL	LB	RL	RR	RB	LR	LL	LB	BR	BL	BB
Horizontal	Double stage	S	S	S	S	S	S	S	S	S	S	S	S	S	S	S
	Triple stage	S	S	S	S	S	S	S	S	S	S	S	S	S	S	S
	Quadruple stage	D	D	D	D	D	D	D	D	D	D	D	D	D	D	D
Vertical	Double stage	D	S	-	-	-	-	D	S	-	-	-	-	-	-	-
	Triple stage	D	S	-	-	-	-	D	S	-	-	-	-	-	-	-
	Quadruple stage	-	-	-	S	D	-	D	S	-	-	-	-	-	-	-
Upright	Double stage	D	D	D	D	D	D	D	D	D	D	D	D	D	D	D
	Triple stage	D	D	D	D	D	D	D	D	D	D	D	D	D	D	D
	Quadruple stage	D	D	D	D	D	D	D	D	D	D	D	D	D	D	D

S: Single oil seal, D: Double oil seal

FKM Seal

FKM seal has better heat resistance compared to the nitrile rubber seal. Use FKM seal when the ambient temperature is 60 degrees Celsius or higher.
FKM seal is also recommended for ambient environment requiring chemical resistance.

Specification

- This is an oil seal with dust lip made of fluorine-containing rubber.

Dimension

The installation dimension is the same as the standard oil seal.
FKM seal do not affect the installation dimension of high speed and slow speed shafts.

Taconite Seal

Taconite seal is suitable used when operating a reducer in a dusty environment, such as applications for coal conveyors.

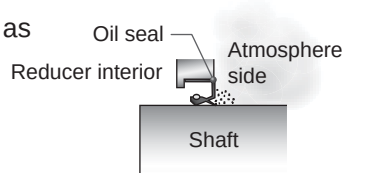

Oil seal

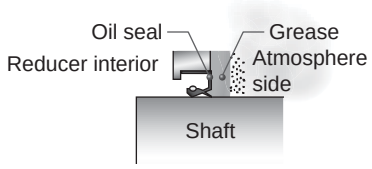

Taconite Seal

Specification

- The seal structure has grease on the open air side. This prevents dust particles from reaching the oil seal lip to prevent wear and tear.
- There are two types of seal structures, “standard” and “labyrinth.”

Standard type

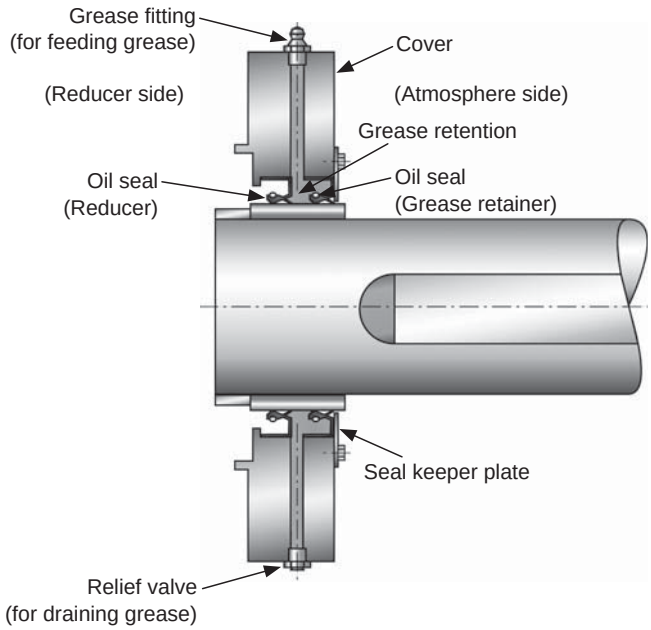

Labyrinth type

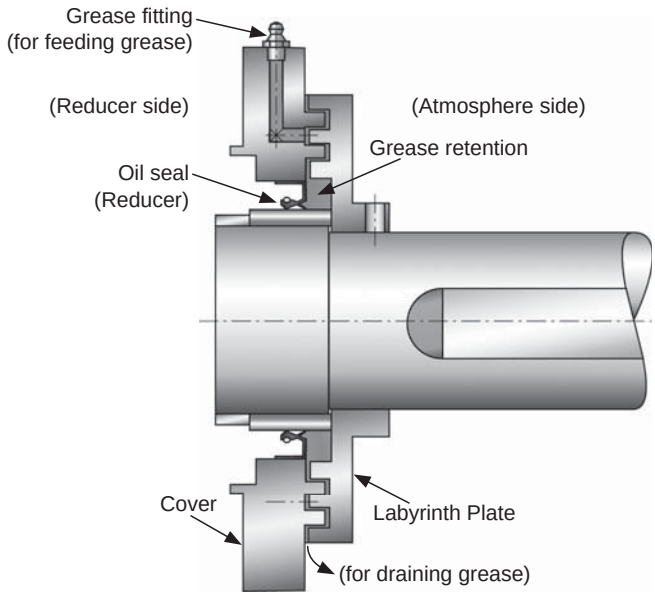

Seal structure application table
S: Standard type L: Labyrinth type

Size	High speed shaft						Slow speed shaft
	P2	P3	P4	R2	R3	R4	
9015	S	S	–	S	–	–	S
9025	S	S	–	S	–	–	
9030	S	S	S	S	S	–	
9035	S	S	S	S	S	–	
9045 ~ 9085	S	S	S	S	S	S	
9090 ~ 9115	L	L	S	S	S	S	

Dimension

- The above table shows that output dimension of the shaft with “Standard type” taconite seal is the same as those described in this catalog as standard.
- The high speed shaft seal for 9090 - 9115 P2 , P3 is the “Labyrinth type (L)” with different shaft output dimensions and collar-end dimensions from standard.

Dimension

Taconite seal “labyrinth type” high speed shaft-end

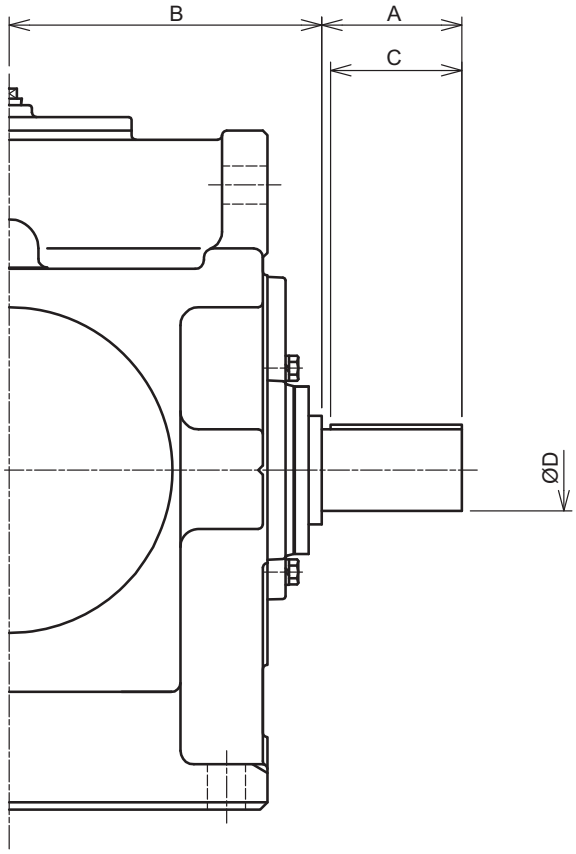

Parallel Shaft Double Stage Reduction Horizontal Mounting

Size	A	B	C	D	Key
9090	155	345	150	90m6	25x14
9095	155	345	150	90m6	25x14
9100	195	390	190	100m6	28x16
9105	195	390	190	100m6	28x16
9110	195	420	190	110m6	28x16
9115	195	420	190	110m6	28x16

Unit : mm

Parallel Shaft Triple Stage Reduction Horizontal Mounting

Size	A	B	C	D	Key
9090	125	345	125	65m6	18x11
9095	125	345	125	65m6	18x11
9100	125	390	125	75m6	20x12
9105	125	390	125	75m6	20x12
9110	155	420	150	80m6	22x14
9115	155	420	150	80m6	22x14

Unit : mm

Internal Backstop

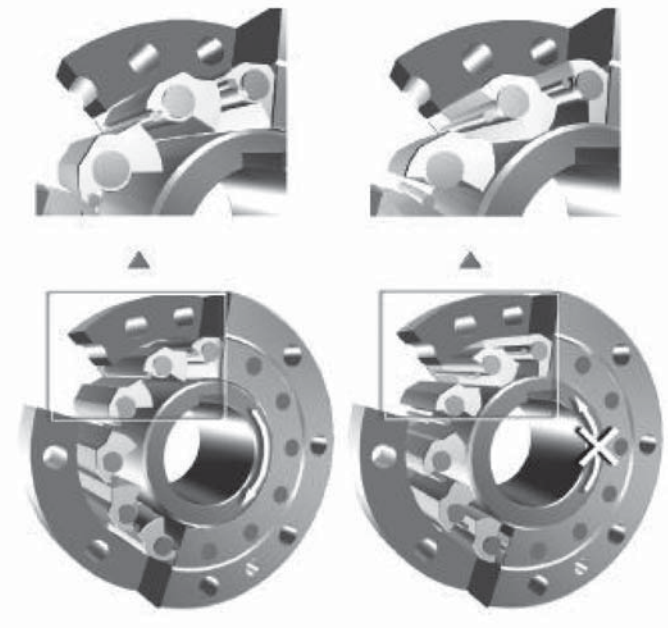

Internal backstop is mounted directly on the intermediate shaft of the reducer.
Internal type does not require the torque arm for the back stop, bearing, oil seal, and specialized lubrication, unlike the exterior-mount type. It makes the application device more simple, compact, and maintenance free.

Specification

- Inner race rotate in single direction only. This is a centrifugal lift-off backstop with no contact of cam.

Dimension

Parallel Shaft Triple Stage Reduction Horizontal Mounting

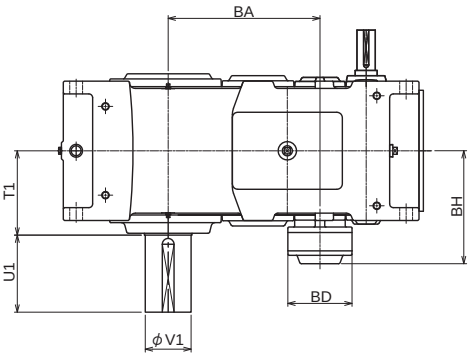

Size	BA	BH	BD	T1	V1	U1	Approx. oil quantity [ℓ]
9050	358	263	150	201	110	210	24
9055	397	263	150	201	120	210	24
9060	414	308	175	230	125	210	35 *
9065	460	308	175	234	140	250	40 *
9070	482	330	190	259	145	250	53 *
9075	535	330	190	262	160	300	64 *
9080	556	365	210	282	165	300	69 *
9085	612	365	210	285	175	300	85 *

Note: The oil volumes marked with "*" are different from the standard oil volume. Unit : mm

Standard Shaft Arrangement Configuration

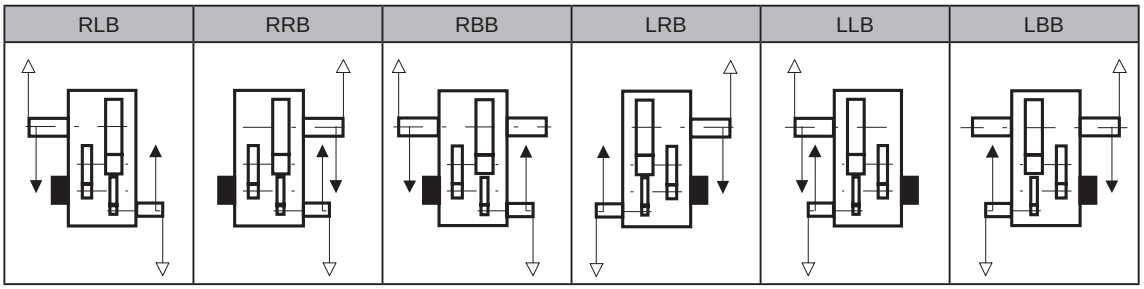

(■ : Backstop)

Parallel Shaft Quadruple Stage Reduction Horizontal Mounting

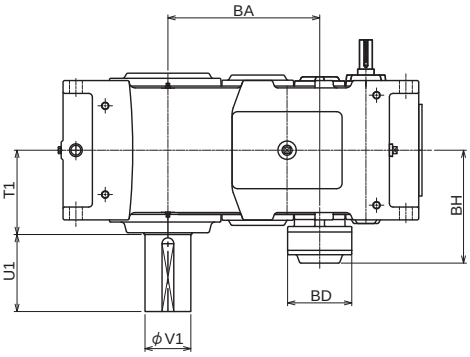

Size	BA	BH	BD	T1	V1	U1	Approx. oil quantity [ℓ]
9050	358	263	150	201	110	210	56
9055	397	263	150	201	120	210	56
9060	414	308	175	230	125	210	37
9065	460	308	175	234	140	250	42
9070	482	330	190	259	145	250	56
9075	535	330	190	262	160	300	67
9080	556	365	210	282	165	300	73
9085	612	365	210	285	175	300	90

Unit : mm

Standard Shaft Arrangement Configuration

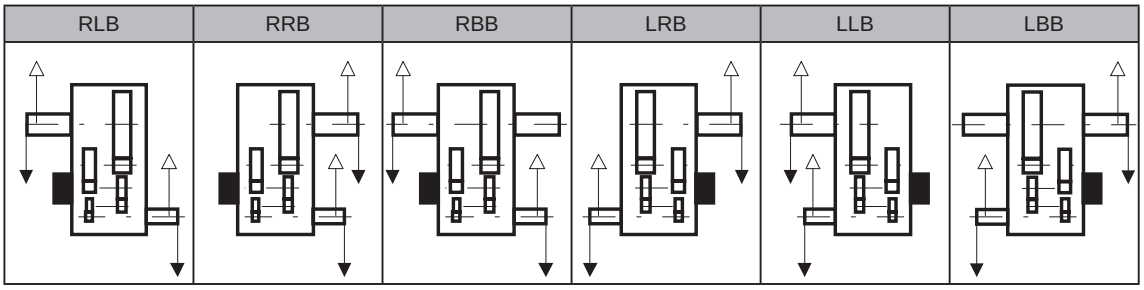

(■ : Backstop)

Internal Backstop

Right Angle Shaft Double Stage Reduction Horizontal Mounting

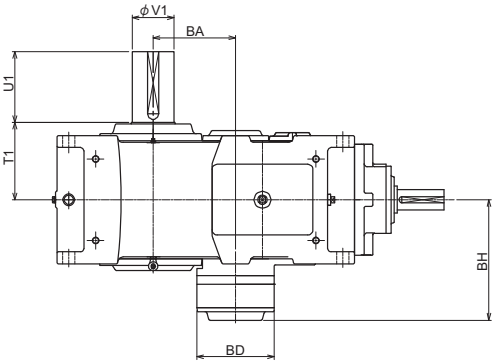

Size	BA	BH	BD	T1	V1	U1	Approx. oil quantity [ℓ]
9060	245	358	230	230	125	210	25
9065	291	358	230	234	140	250	34
9070	285	402.5	290	259	145	250	37
9075	338	402.5	290	262	160	300	46
9080	330	416.5	322	282	165	300	53
9085	386	416.5	322	285	175	300	67

Unit : mm

Note: Consult us when a backstop is used more than twenty times per an hour.

Standard Shaft Arrangement Configuration

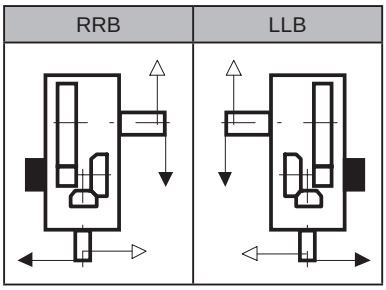

(■ : Backstop)

Right Angle Shaft Triple Stage Reduction Horizontal Mounting

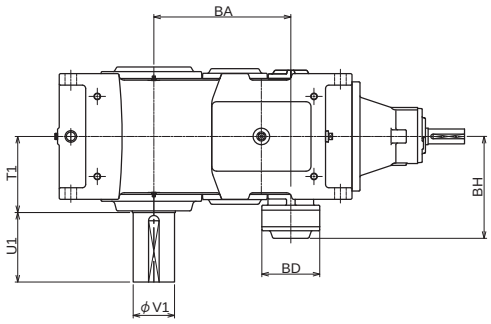

Size	BA	BH	BD	T1	V1	U1	Approx. oil quantity [ℓ]
9050	358	263	150	201	110	210	32
9055	397	263	150	201	120	210	32
9060	414	308	175	230	125	210	29
9065	460	308	175	234	140	250	33
9070	482	330	190	259	145	250	45
9075	535	330	190	262	160	300	52
9080	556	365	210	282	165	300	60
9085	612	365	210	285	175	300	75

Unit : mm

Standard Shaft Arrangement Configuration

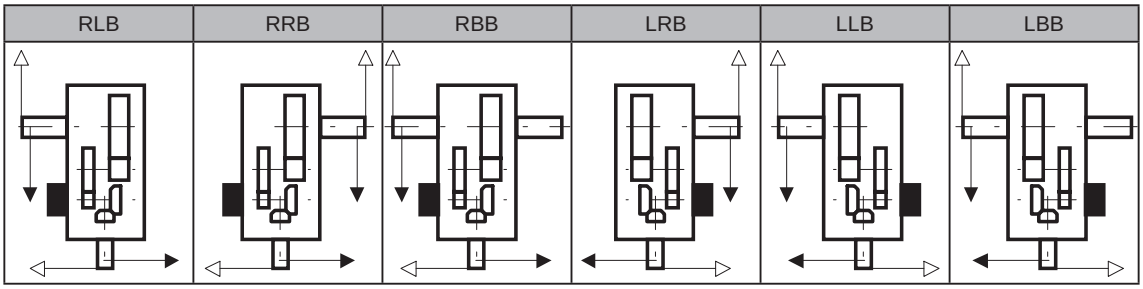

(■ : Backstop)

Right Angle Shaft Quadruple Stage Reduction Horizontal Mounting

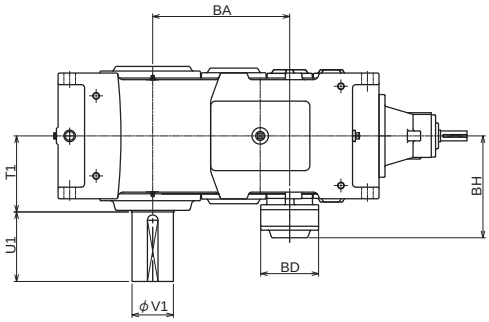

Size	BA	BH	BD	T1	V1	U1	Approx. oil quantity [ℓ]
9050	358	263	150	201	110	210	24
9055	397	263	150	201	120	210	24
9060	414	308	175	230	125	210	38
9065	460	308	175	234	140	250	43
9070	482	330	190	259	145	250	57
9075	535	330	190	262	160	300	67
9080	556	365	210	282	165	300	73
9085	612	365	210	285	175	300	90

Unit : mm

Standard Shaft Arrangement Configuration

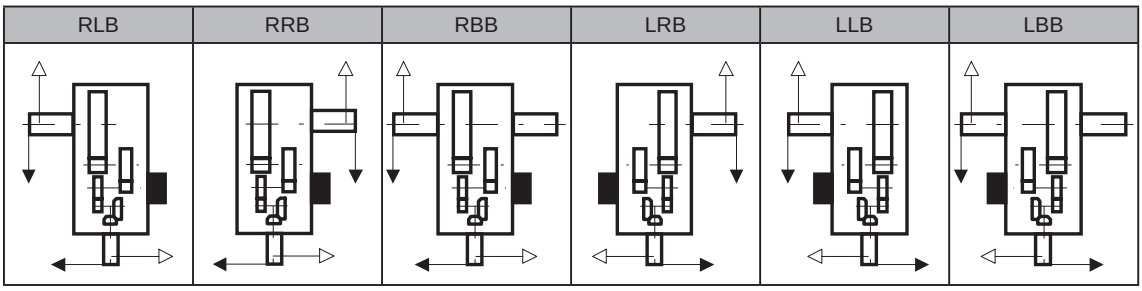

(■ : Backstop)

Washdown Breather

Select washdown breather for outdoor environment with exposure to rain or water splash.

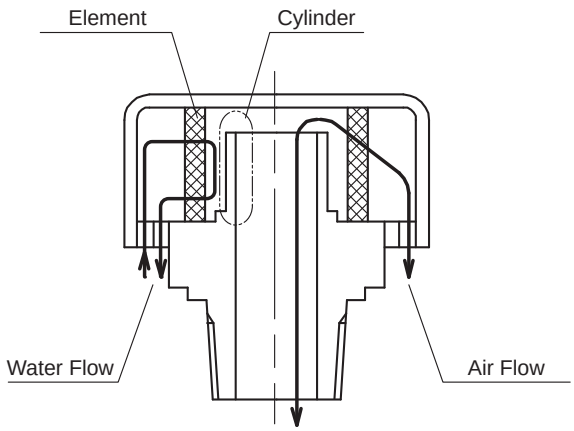

Specification

- Compared to the normal air breather, this one has an internal cylindrical section to prevent drops of water from the outside from entering into the inside of the reducer.
- The element is made of stainless steel.

Dimension

Horizontal Mounting

PHA9015-9055 Right Angle Shaft Double, Triple, Quadruple Stage Reduction;
Parallel Shaft Double, Triple, Quadruple Stage Reduction

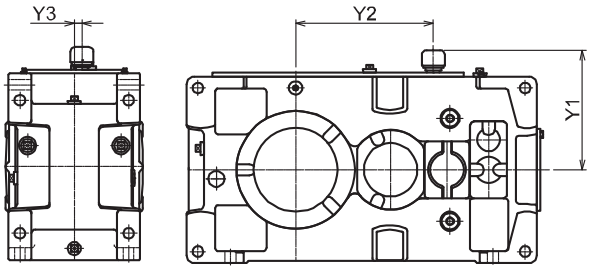

Size	Y1	Y2	Y3
9015	205	150	0
9025	225	200	18
9030	230	232	20
9035	255	263	20
9040	270	274	20
9045	290	313	20
9050	280	322	20
9055	315	361	20

Unit : mm

PHD9060-9085 Right Angle Shaft Double, Triple, Quadruple Stage Reduction;
Parallel Shaft Double, Triple, Quadruple Stage Reduction

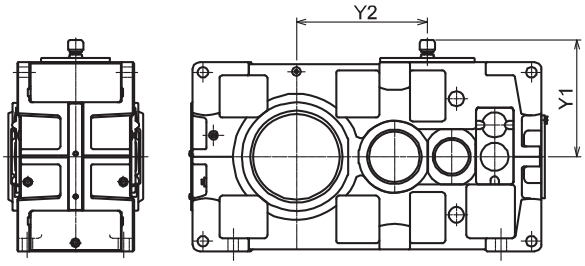

Size	Y1	Y2
9060	354	325
9065	389	371
9070	389	370
9075	424	423
9080	424	460
9085	464	516

Unit : mm

PHD9090-9115 Right Angle Shaft Double, Triple, Quadruple Stage Reduction;
Parallel Shaft Double, Triple, Quadruple Stage Reduction

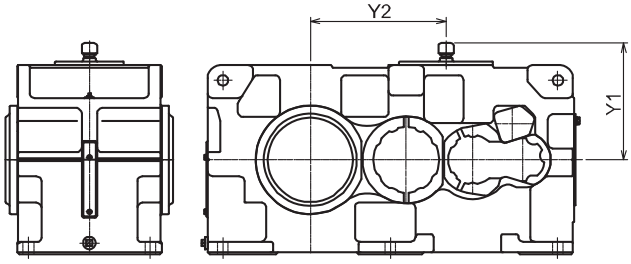

Size	Y1	Y2
9090	464	535
9095	489	565
9100	514	620
9105	539	655
9110	564	710
9115	589	760

Unit : mm

Dimension

Vertical Mounting

PVA9015-9055 Right Angle Shaft Double, Triple, Quadruple Stage Reduction;
Parallel Shaft Double, Triple, Quadruple Stage Reduction

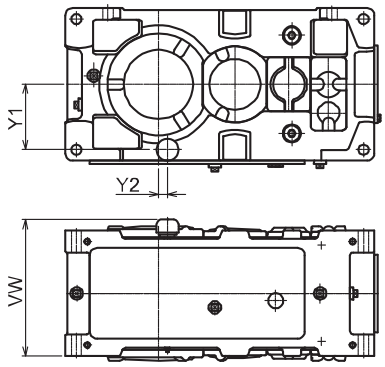

Size	Y1	Y2	VW
9015	110	35	243
9025	130	25	270
9030	135	0	351
9035	160	0	298
9040	175	30	340
9045	195	30 *1	340
9050	180	25	375
9055	215	0	375

Unit : mm

Note : ・ *1; The size for the Right Angle Shaft Double Stage model, Right Angle Shaft Triple Stage model and Parallel Shaft Double Stage model of 9045 is 29.
・ Consult us when upward vertical shaft is required.

PVD9060-9085 Right Angle Shaft Double, Triple, Quadruple Stage Reduction;
Parallel Shaft Double, Triple, Quadruple Stage Reduction

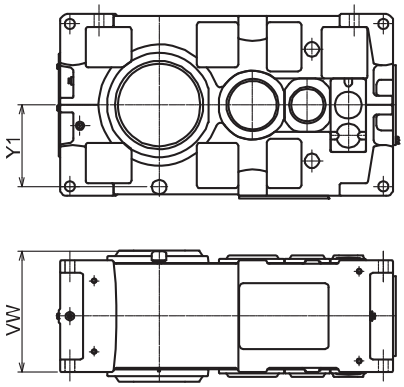

Size	Y1	VW
9060	229	413
9065	264	413
9070	263	463
9075	298	463
9080	298	498
9085	338	498

Unit : mm

Note: Consult us when upward vertical shaft is required.

PVD9090-9115 Right Angle Shaft Double, Triple, Quadruple Stage Reduction;
Parallel Shaft Double, Triple, Quadruple Stage Reduction

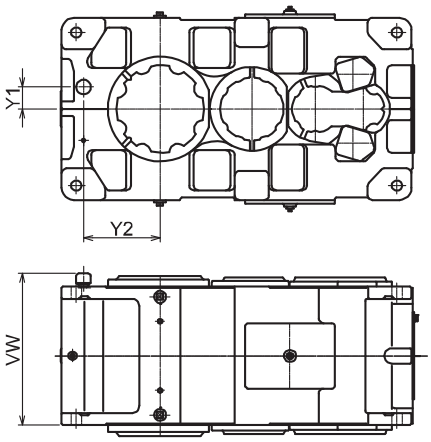

Size	Y1	Y2	VW
9090	90	315	625
9095	90	345	625
9100	100	355	705
9105	100	390	705
9110	100	405	765
9115	100	440	765

Unit : mm

Note: Consult us when upward vertical shaft is required.

Washdown Breather

Dimension

Upright Mounting

PWA9015-9055 Parallel Shaft Double, Triple, Quadruple Stage Reduction

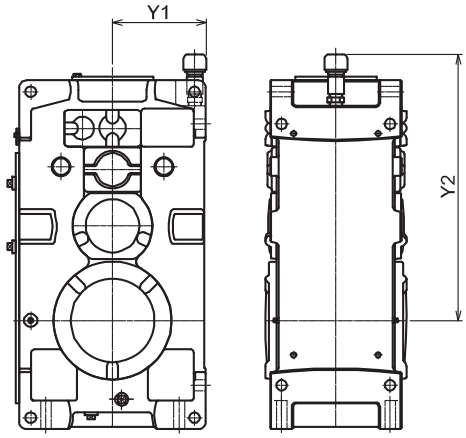

Parallel Shaft Double Stage Reduction (P2)

Size	Y1	Y2
9015	142	358
9025	161	408
9030	166	465
9035	191	496
9040	202	519
9045	222	558
9050	211	589
9055	246	628

Unit : mm

Note: Consult us when you use a right angle shaft.

Parallel Shaft Triple Stage Reduction (P3),
Parallel Shaft Quadruple Stage Reduction (P4)

Size	Y1	Y2
9015	142	403
9025	161	473
9030	166	515
9035	191	546
9040	202	593
9045	222	632
9050	211	662
9055	246	701

Unit : mm

Note: Consult us when you use a right angle shaft.

PWD9060-9085 Parallel Shaft Double, Triple, Quadruple Stage Reduction

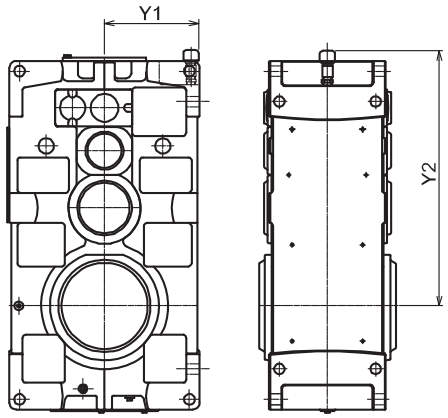

Parallel Shaft Double Stage Reduction (P2)

Size	Y1	Y2
9060	264	655
9065	299	701
9070	297	738
9075	332	791
9080	331	831
9085	371	887

Unit : mm

Note: Consult us when you use a right angle shaft.

Parallel Shaft Triple Stage Reduction (P3),
Parallel Shaft Quadruple Stage Reduction (P4)

Size	Y1	Y2
9060	264	740
9065	299	786
9070	297	833
9075	332	886
9080	331	951
9085	371	1007

Unit : mm

Note: Consult us when you use a right angle shaft.

Anti-Dust Breather

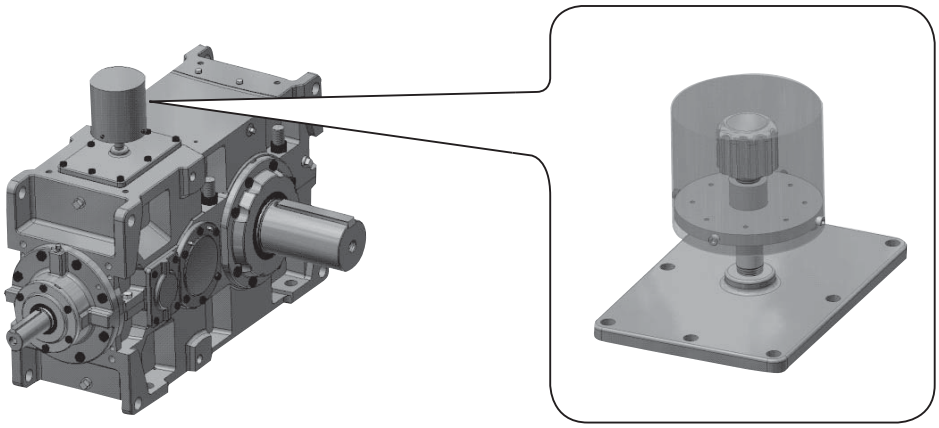

This air breather should be used when installing a reducer in a very dusty environment.
This unit may be used even in an environment whereby the unit with a normal air breather becomes buried under dust.

Specification

- A long nipple is used to raise the unit from the standard installation position, so as to prevent it from becoming buried under dust.
- A dustproof cover is installed over the air breather to prevent direct accumulation of dust.

Dimension

9015 ～ 9136 (all sizes)

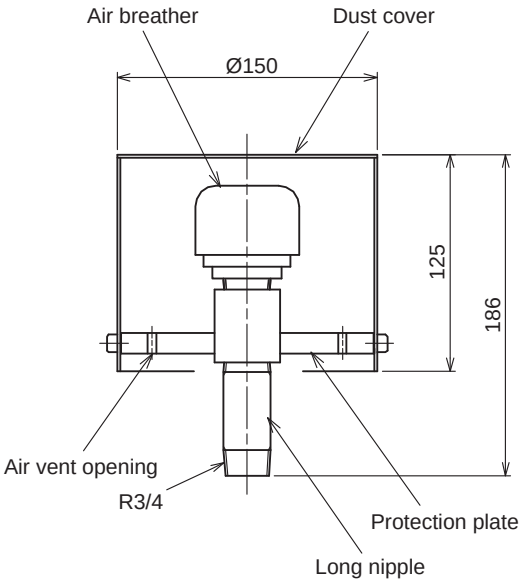

Anti-Humidity Breather

Specification

- This breather should be used in a high-humidity environment with the humidity of 85% or above.
- The main unit of the air breather contains an absorbent agent to prevent moisture penetration.

  The use of this air breather protects the reducer, and prevents the following types of problems:

  ・Rust development on gears and bearings

  ・Burning, pitching and other damage caused by the deterioration of lubrication oil
- The absorbent agent can be replaced easily at a timing that is visually indicated.

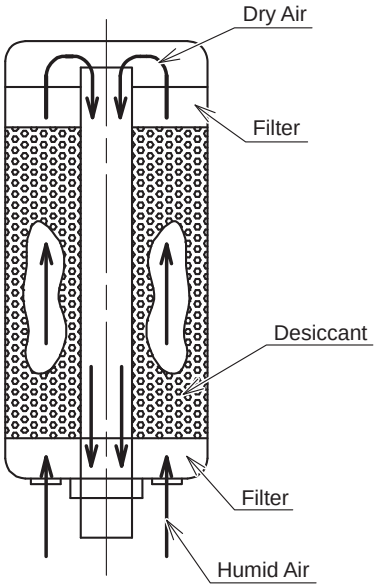

Dimension

Horizontal Mounting

PHA9015-9055 Right Angle Shaft Double, Triple, Quadruple Stage Reduction;
Parallel Shaft Double, Triple, Quadruple Stage Reduction

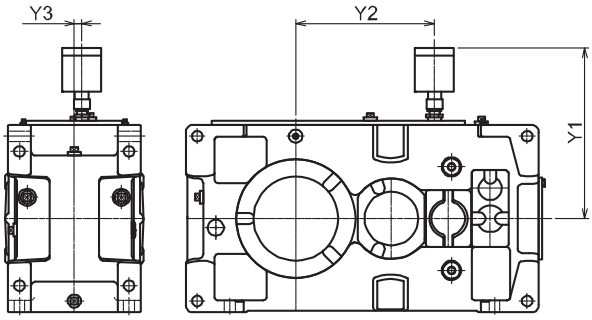

Size	Y1	Y2	Y3
9015	320	150	0
9025	340	200	18
9030	345	232	20
9035	370	263	20
9040	401	274	20
9045	421	313	20
9050	411	322	20
9055	446	361	20

Unit : mm

PHD9060-9085 Right Angle Shaft Double, Triple, Quadruple Stage Reduction;
Parallel Shaft Double, Triple, Quadruple Stage Reduction

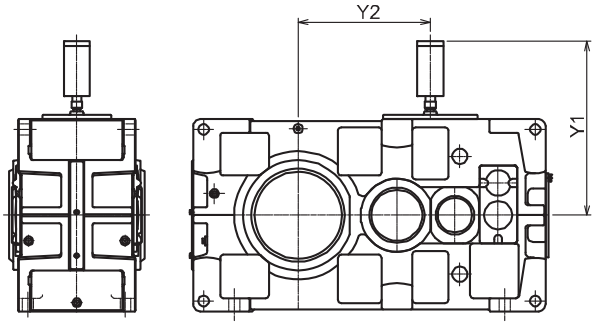

Size	Y1	Y2
9060	469	325
9065	504	371
9070	504	370
9075	539	423
9080	640	460
9085	680	516

Unit : mm

PHD9090-9115 Right Angle Shaft Double, Triple, Quadruple Stage Reduction;
Parallel Shaft Double, Triple, Quadruple Stage Reduction

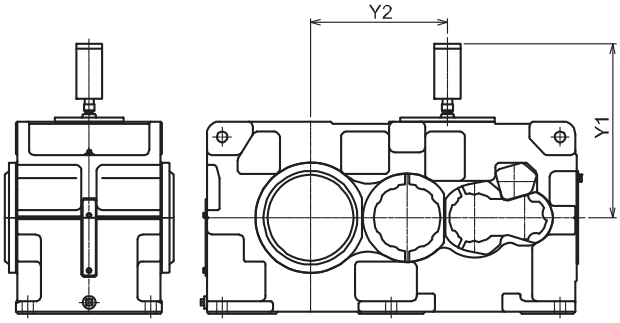

Size	Y1	Y2
9090	680	535
9095	705	565
9100	730	620
9105	755	655
9110	780	710
9115	805	760

Unit : mm

Dimension

Vertical Mounting

PVA9015-9055 Right Angle Shaft Double, Triple, Quadruple Stage Reduction;
Parallel Shaft Double, Triple, Quadruple Stage Reduction

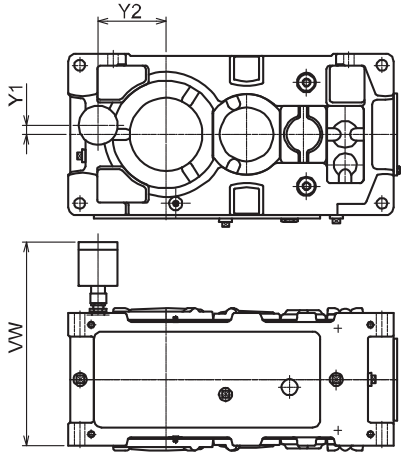

Right Angle Shaft Double Stage Reduction (R2),
Right Angle Shaft Triple Stage Reduction (R3),
Parallel Shaft Double Stage Reduction (P2)

Size	Y1	Y2	VW
9015	23	107	364
9025	26	117	391
9030	24	135	419
9035	24	154	419
9040	28	165	478
9045	28	186	478
9050	32	177	513
9055	32	208	513

Unit : mm

Note: Consult us when upward vertical shaft is required.

Right Angle Shaft Quadruple Stage Reduction (R4),
Parallel Shaft Triple Stage Reduction (P3),
Parallel Shaft Quadruple Stage Reduction (P4)

Size	Y1	Y2	VW
9015	19	107	364
9025	23	117	391
9030	23	135	419
9035	23	154	419
9040	24	165	478
9045	24	186	478
9050	24	177	513
9055	24	208	513

Unit : mm

Note: Consult us when upward vertical shaft is required.

PVD9060-9085 Right Angle Shaft Double, Triple, Quadruple Stage Reduction;
Parallel Shaft Double, Triple, Quadruple Stage Reduction

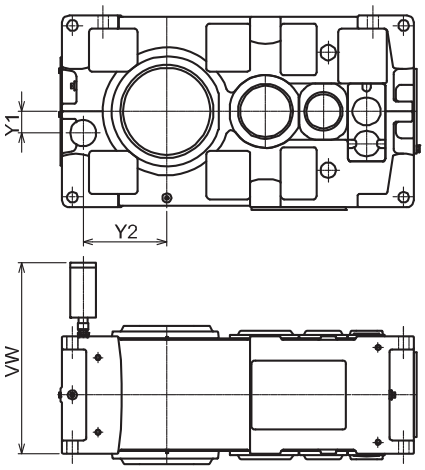

Size	Y1	Y2	VW
9060	65	214	551
9065	65	253	551
9070	75	251	601
9075	75	298	601
9080	85	283	738
9085	85	327	738

Unit : mm

Note: Consult us when upward vertical shaft is required.

Anti-Humidity Breather

Dimension

Vertical Mounting

PVD9090-9115 Right Angle Shaft Double, Triple, Quadruple Stage Reduction;
Parallel Shaft Double, Triple, Quadruple Stage Reduction

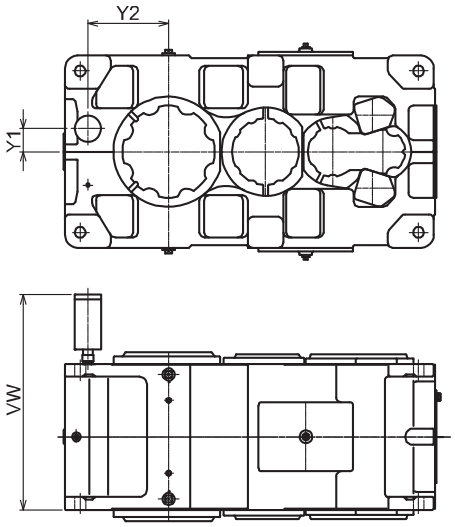

Size	Y1	Y2	VW
9090	90	315	858
9095	90	345	858
9100	100	355	938
9105	100	390	938
9110	100	405	998
9115	100	440	998

Unit : mm

Note: Consult us when upward vertical shaft is required.

Dimension

Upright Mounting

PWA9015-9055 Parallel Shaft Double, Triple, Quadruple Stage Reduction

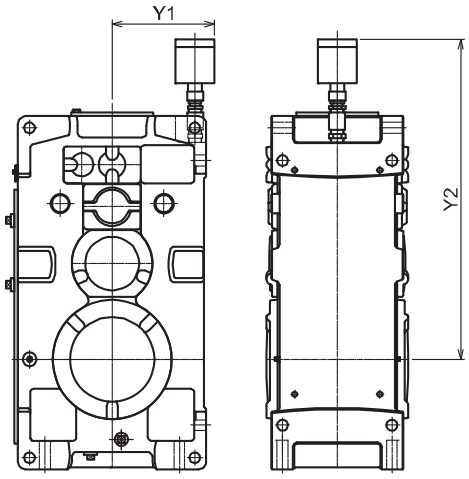

Parallel Shaft Double Stage Reduction (P2)

Size	Y1	Y2
9015	163	473
9025	182	523
9030	187	580
9035	212	611
9040	223	650
9045	243	689
9050	232	720
9055	267	759

Unit : mm

Note: Consult us when you use a right angle shaft.

Parallel Shaft Triple Stage Reduction (P3),
Parallel Shaft Quadruple Stage Reduction (P4)

Size	Y1	Y2
9015	163	518
9025	182	588
9030	187	630
9035	212	661
9040	223	724
9045	243	763
9050	232	793
9055	267	832

Unit : mm

Note: Consult us when you use a right angle shaft.

PWD9060-9085 Parallel Shaft Double, Triple, Quadruple Stage Reduction

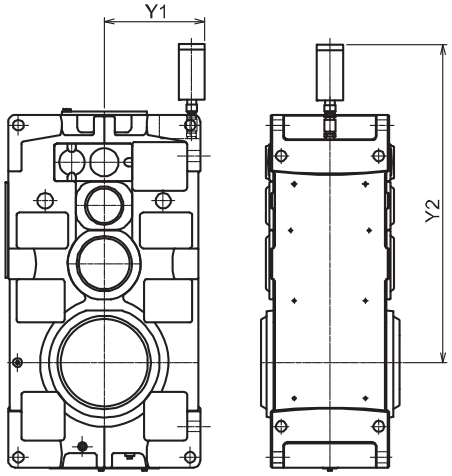

Parallel Shaft Double Stage Reduction (P2)

Size	Y1	Y2
9060	285	786
9065	320	832
9070	318	869
9075	353	922
9080	352	1064
9085	392	1120

Unit : mm

Note: Consult us when you use a right angle shaft.

Parallel Shaft Triple Stage Reduction (P3),
Parallel Shaft Quadruple Stage Reduction (P4)

Size	Y1	Y2
9060	285	871
9065	320	917
9070	318	964
9075	353	1017
9080	352	1184
9085	392	1240

Unit : mm

Note: Consult us when you use a right angle shaft.

Stainless Steel Drain Valve

This drain valve is less corrosive than a bronze valve, and can be used in a corrosive atmosphere for an extended period of time.

Specification

- If you require anticorrosive performance, use a stainless-steel drain valve.
- The drain valve uses a ball valve made of stainless steel (equivalent to SUS304).
  * Consult us for gate valves, which can be also manufactured.

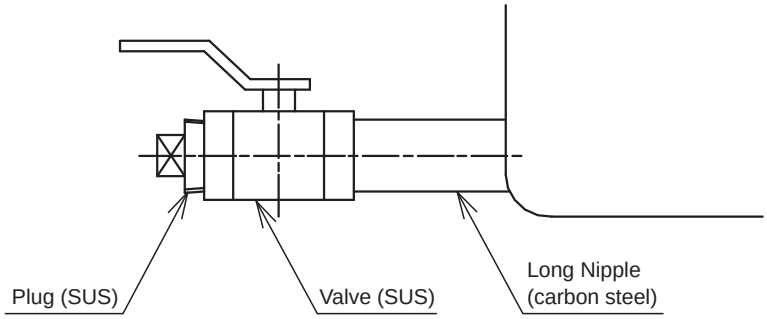

Dimension

Horizontal Mounting

PHA9015-9055 Right Angle Shaft Double, Triple, Quadruple Stage Reduction;
Parallel Shaft Double, Triple, Quadruple Stage Reduction

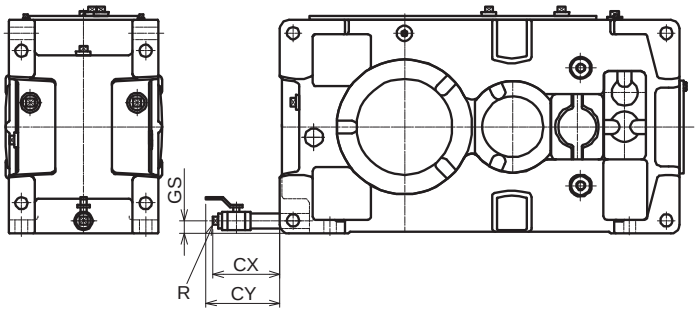

Size	R	CX	CY	GS
9015	3/4"	133	170	23
9025	3/4"	133	170	24
9030	3/4"	130	167	24
9035	3/4"	130	167	24
9040	1"	154	198	28
9045	1"	154	198	28
9050	1"	154	198	29
9055	1"	154	198	29

Unit : mm

PHD9060-9085 Right Angle Shaft Double, Triple, Quadruple Stage Reduction;
Parallel Shaft Double, Triple, Quadruple Stage Reduction

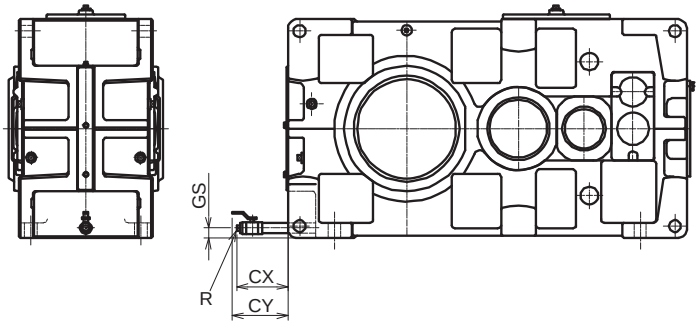

Size	R	CX	CY	GS
9060	1"	191	235	31
9065	1"	191	235	31
9070	1"	176	220	33
9075	1"	176	220	33
9080	1"	176	220	34
9085	1"	176	220	34

Unit : mm

PHD9090-9115 Right Angle Shaft Triple, Quadruple Reduction,
Parallel Shaft Double, Triple, Quadruple Stage Reduction

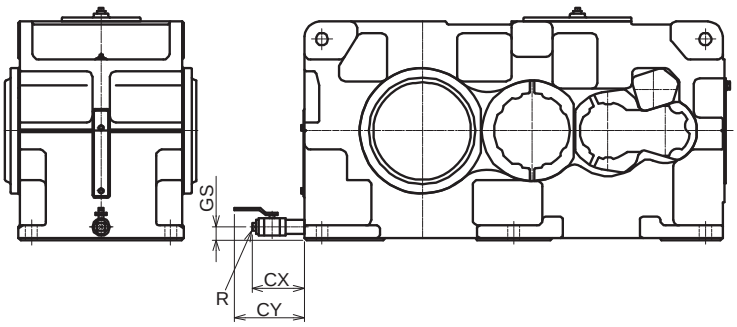

Size	R	CX	CY	GS
9090	1 1/2"	181	241	45
9095	1 1/2"	181	241	45
9100	1 1/2"	181	241	45
9105	1 1/2"	181	241	45
9110	1 1/2"	181	241	48
9115	1 1/2"	181	241	48

Unit : mm

Stainless Steel Drain Valve

Dimension

Vertical Mounting

PVA9015-9055 Right Angle Shaft Double, Triple, Quadruple Stage Reduction;
Parallel Shaft Double, Triple, Quadruple Stage Reduction

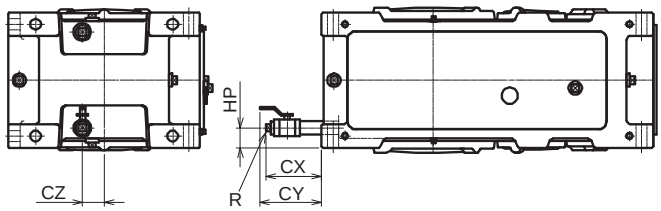

9030-9055 Right Angle Shaft Double Stage Reduction (R2),
Right Angle Shaft Triple Reduction (R3),
Parallel Shaft Double Stage Reduction (P2)

Size	R	CX	CY	CZ	HP
9030	3/4"	121	158	40	43
9035	3/4"	121	158	40	43
9040	1"	149	193	48	55
9045	1"	149	193	48	55
9050	1"	141	185	55	50
9055	1"	141	185	55	50

Unit : mm

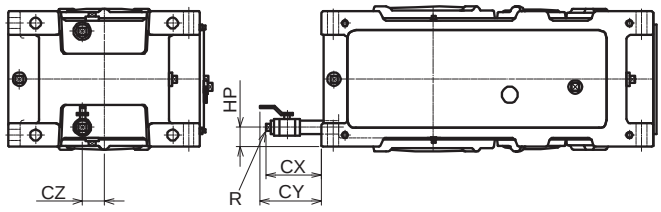

9015,9025 Right Angle Shaft Double Stage Reduction (R2),
Parallel Shaft Double Stage Reduction (P2),
Parallel Shaft Triple Stage Reduction (P3)
9030-9055 Right Angle Shaft Quadruple Stage Reduction (R4),
Parallel Shaft Triple Stage Reduction (P3),
Parallel Shaft Quadruple Stage Reduction (P4)

Size	R	CX	CY	CZ	HP
9015	3/4"	133	170	25	38
9025	3/4"	128	165	30	40.5
9030	3/4"	121	158	44	43
9035	3/4"	121	158	44	43
9040	1"	149	193	56	55
9045	1"	149	193	56	55
9050	1"	141	185	56	50
9055	1"	141	185	56	50

Unit : mm

PVD9060-9085 Right Angle Shaft Double, Triple, Quadruple Stage Reduction;
Parallel Shaft Double, Triple, Quadruple Stage Reduction

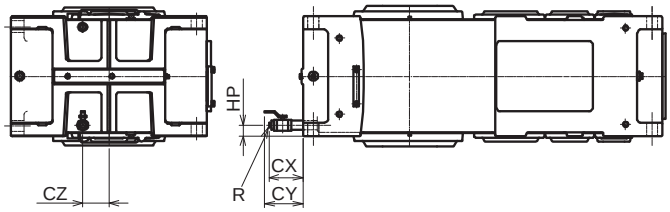

Size	R	CX	CY	CZ	HP
9060	1"	141	185	75	47
9065	1"	141	185	75	47
9070	1"	141	185	85	47
9075	1"	141	185	85	47
9080	1"	131	175	100	42
9085	1"	131	175	100	42

Unit : mm

PVD9090-9115 Right Angle Shaft Triple, Quadruple Stage Reduction;
Parallel Shaft Double, Triple, Quadruple Stage Reduction

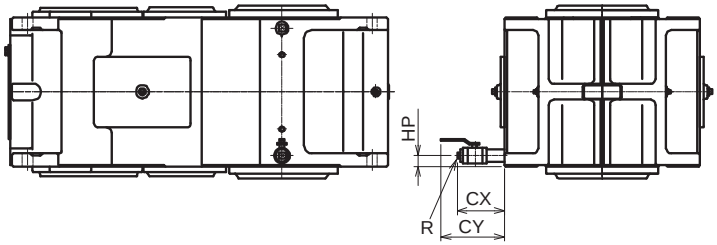

Size	R	CX	CY	HP
9090	1 1/2"	181	241	42
9095	1 1/2"	181	241	42
9100	1 1/2"	181	241	43
9105	1 1/2"	181	241	43
9110	1 1/2"	181	241	44
9115	1 1/2"	181	241	44

Unit : mm

Dimension

Upright Mounting

PWA9015-9055 Right Angle Shaft Double, Triple, Quadruple Stage Reduction;
Parallel Shaft Double, Triple, Quadruple Stage Reduction

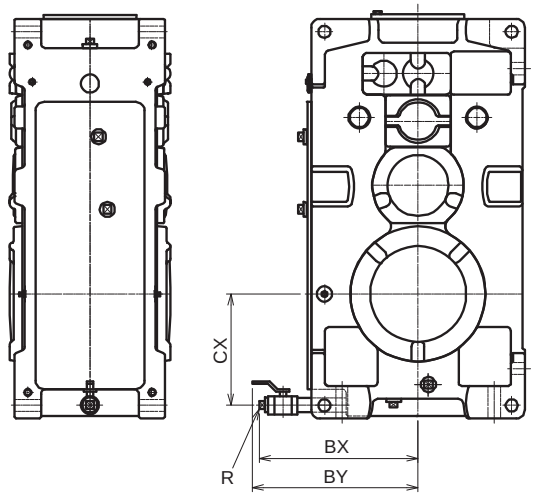

Size	R	BX	BY	CX
9015	3/4"	271	308	135
9025	3/4"	288	325	149
9030	3/4"	290	327	173
9035	3/4"	308	345	192
9040	1"	379	423	205
9045	1"	354	398	226
9050	1"	364	408	224
9055	1"	364	430	255

Unit : mm

PWA9060-9085 Right Angle Shaft Double, Triple, Quadruple Stage Reduction;
Parallel Shaft Double, Triple, Quadruple Stage Reduction

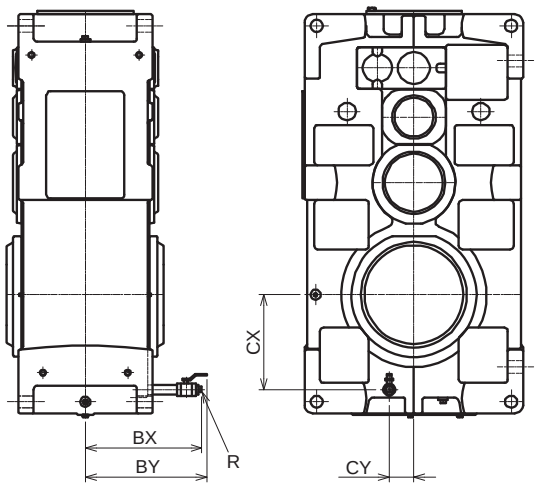

Size	R	BX	BY	CX	CY
9060	1"	356	400	214	65
9065	1"	356	400	253	65
9070	1"	381	425	251	75
9075	1"	381	425	298	75
9080	1"	401	445	283	85
9085	1"	401	445	327	85

Unit : mm

Split Fan Hood (Right Angle Shaft)

This fan hood may be dismounted to facilitate the installation and removal of the coupling.

It creates additional space when using a fluid coupling on the reducer for a conveyor, or when conducting maintenance work on a large coupling.

Specification

- It is designed so that it breaks up into two sections.
- It is only for horizontal models, and has the identical exterior dimensions as the standard fan hood for installation compatibility.
- Similarly to the standard fan hood, this fan hood has a perforated steel plate on the back for safety reasons, ensuring that people cannot touch the fan rotor.

Note: Make sure not to cover the air inlet of the fan hood.

Dimension

Horizontal Mounting

PHD9060-9085 Right Angle Shaft Double Stage Reduction

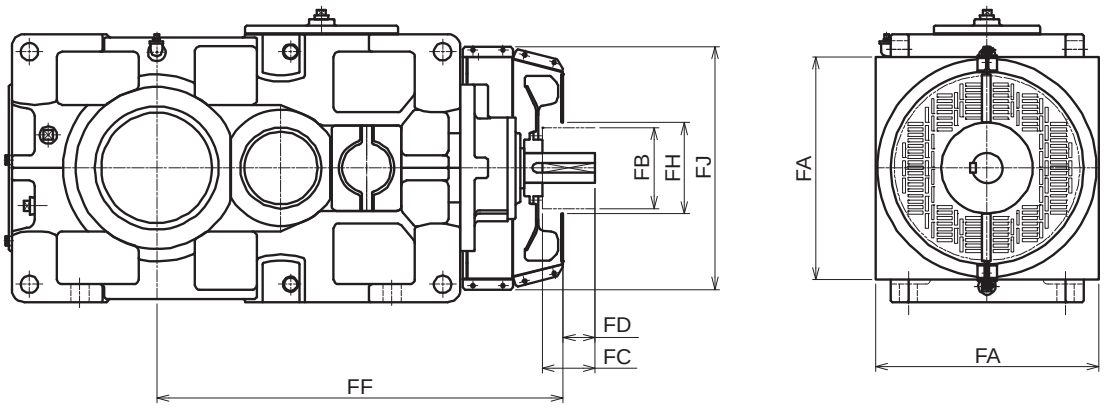

Size	FA	FB	FC	FD	FF	FH	FJ
9060	440	160	105	64	801	180	480
9065	440	160	105	64	847	180	480
9070	490	200	105	64	901	220	530
9075	490	200	105	64	954	220	530
9080	540	225	105	59	1021	245	580
9085	540	225	105	59	1077	245	580

Unit: mm

Split Fan Hood (Right Angle Shaft)

Dimension

Horizontal Mounting

PHD9060-9085 Right Angle Shaft Triple Stage Reduction

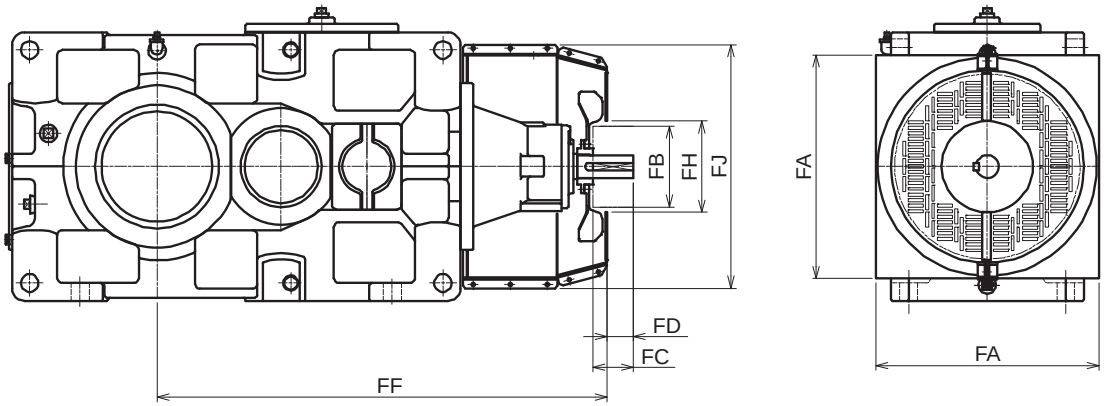

Size	FA	FB	FC	FD	FF	FH	FJ
9060	440	160	80	51	888	180	480
9065	440	160	80	51	934	180	480
9070	490	160	80	51	976	180	530
9075	490	160	80	51	1029	180	530
9080	540	160	105	64	1112	180	580
9085	540	160	105	64	1168	180	580

Unit: mm

PHD9090-9105 Right Angle Shaft Triple Stage Reduction

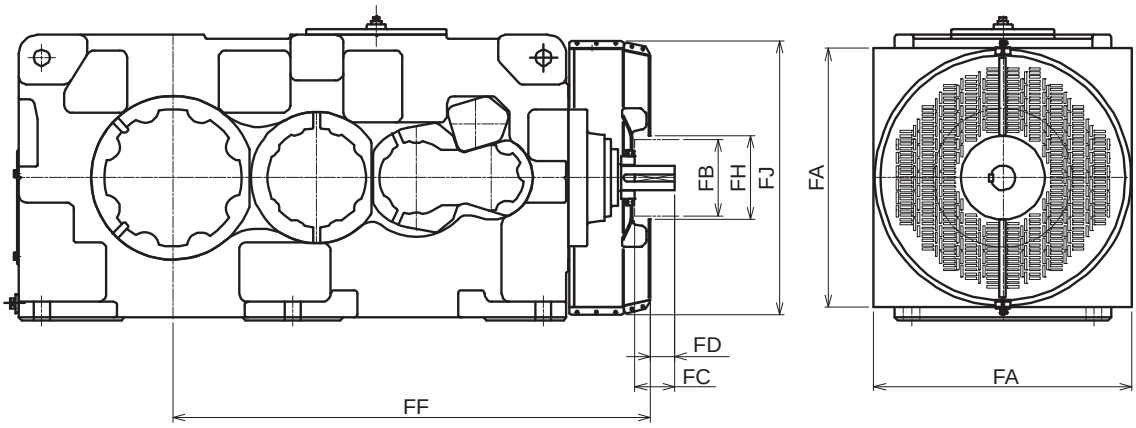

Size	FA	FB	FC	FD	FF	FH	FJ
9090	680	200	105	67	1257	220	720
9095	680	200	105	67	1287	220	720
9100	760	225	105	62	1416	245	800
9105	760	225	105	62	1450	245	800

Unit: mm

Shaft Cap

For a machine or auxiliary unit that has to use a different shaft due to layout change, a dual output shaft reducer is often chosen so that either side may be used for the output. This cap is used as a safety cover in such cases.

Specification

- The cap is made of welded thin sheet metal.
- The cap is processed for installation on both sides. You can remove a fitted shaft cap, and place it over the shaft on the other side.

Dimension

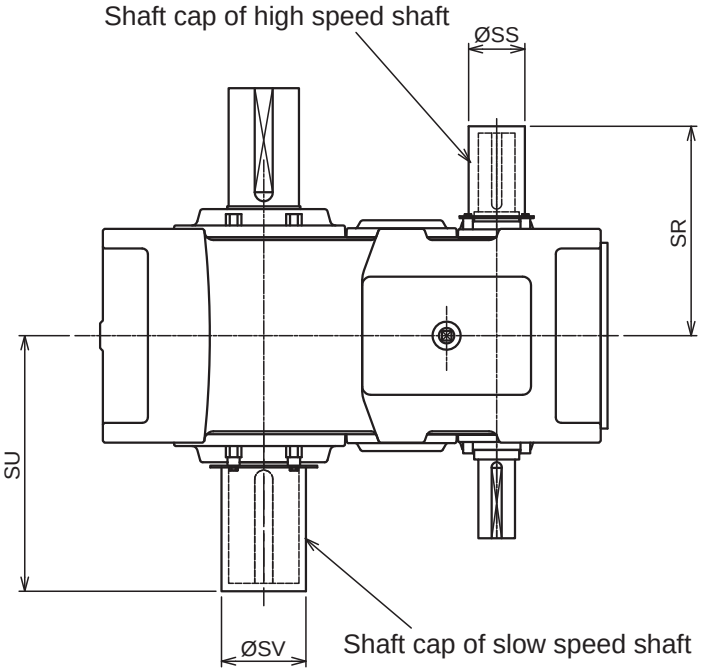

For high speed shaft

Size		SR	ØSS
9050	2 stage	312	90
	3 stage	278	70
9055	2 stage	312	90
	3 stage	278	70
9060	2 stage	372	100
	3 stage	337	80
9065	2 stage	372	100
	3 stage	337	80
9070	2 stage	394	100
	3 stage	362	90
	4 stage	362	70
9075	2 stage	394	100
	3 stage	362	90
	4 stage	362	70
9080	2 stage	444	110
	3 stage	414	100
	4 stage	384	75
9085	2 stage	444	110
	3 stage	414	100
	4 stage	384	75
9090	2 stage	508	120
	3 stage	478	90
	4 stage	448	75
9095	2 stage	508	120
	3 stage	478	90
	4 stage	448	75
9100	2 stage	595	130
	3 stage	525	100
	4 stage	526	85

Unit: mm

For slow speed shaft

Size	SU	ØSV
9030	345	120
9035	342	130
9040	362	135
9045	404	145
9050	424	150
9055	424	160
9060	454	150
9065	499	170
9070	524	170
9075	577	190
9080	597	190
9085	601	230
9090	666	230
9095	716	230
9100	756	240

Unit: mm

Oil Flow Switch

This flow switch may be directly installed on the forced lubrication pipe to sound an alarm if a pump stops to terminate the oil flow or to control the operation of the reducer. This is useful to prevent reducer damage attributable to poor lubrication. The diagram on the right shows an installation example of the flow switch.

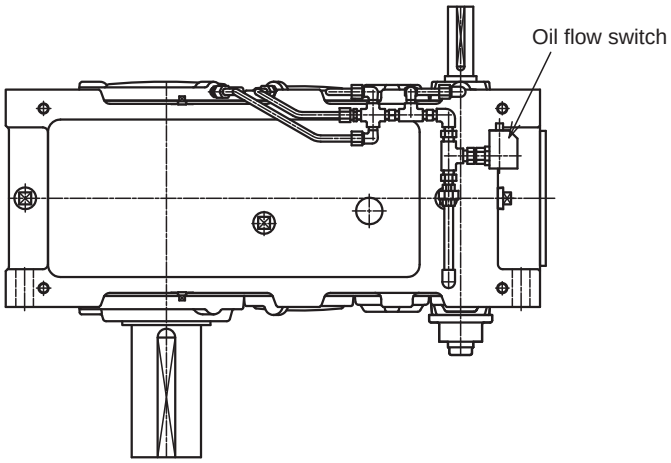

Specification

- This flow switch (fluid sensor) uses an electronic sensor system, and therefore has no moving parts to remain free from problems caused by grime accumulation or blockage. This feature makes it a maintenance-free switch.
- The sensor is adjusted at the factory on shipment, and requires no further adjustment by users.

Oil Pressure Switch

This pressure switch may be directly installed on the forced lubrication pipe to sound an alarm if a pump stops to terminate oil circulation and reduces hydraulic pressure, or to stop the operation of the reducer. This is useful to prevent reducer damage attributable to poor lubrication. The diagram below shows an installation example of the pressure switch.

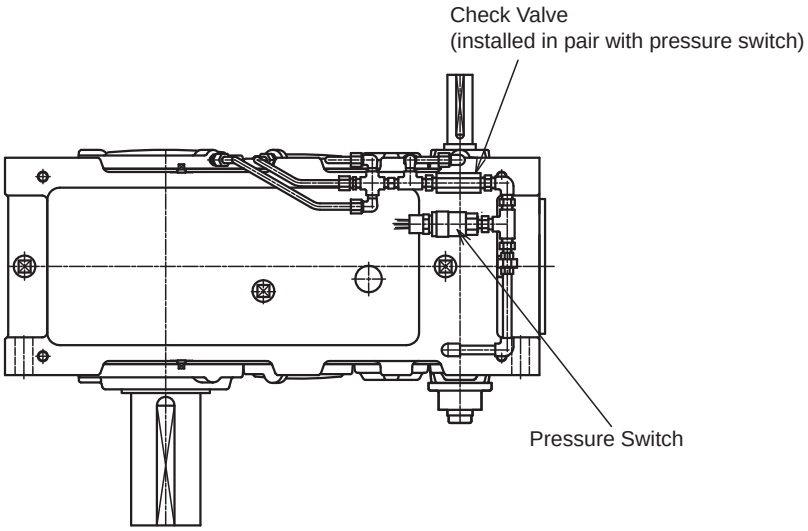

Specification

- The pressure in the forced lubrication pipe fluctuates largely according to oil temperature. However, this option applies a check valve to generate pressure above a certain level as long as there is oil flow, and therefore allows you to positively determine whether there is oil flow or not. The sensor is adjusted at the factory on shipment, and requires no further adjustment by users.

TECHNICAL DATA Formula of Drive System SI Units

1. Revolving Speed N(r/min), Velocity V(m/s)

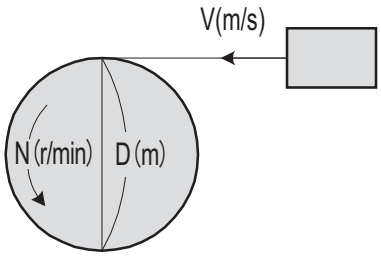

$$V = \pi \cdot D \cdot \frac{N}{60} \quad (m/s)$$

π : Circular constant (≈3.14)
D : Wheel Diameter (m)

2. Torque T (Nm)

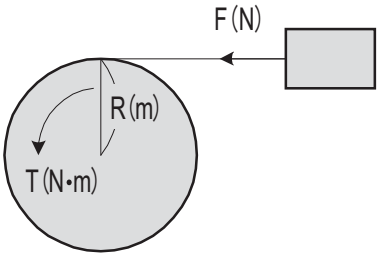

$$T = F \cdot R \quad (N \cdot m)$$

F : Load (N)
R : Wheel Radius (m)

3. Power P(kW)

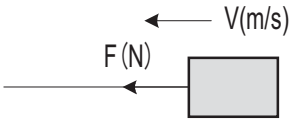

$$P = \frac{F \cdot V}{1000} \quad (kW)$$

F : Load (N)
V : Velocity (m/s)

4. Power P(kW), Torque T(Nm), Revolving Speed N(r/min)

$$P = \frac{N \cdot T}{9550} \ (kW), \quad T = \frac{9550 \cdot P}{N} \ (N \cdot m)$$

$$P = \frac{F \cdot V}{1000} \ (kW), \quad V = \pi \cdot 2 \cdot R \cdot \frac{N}{60} \ (m/s)$$

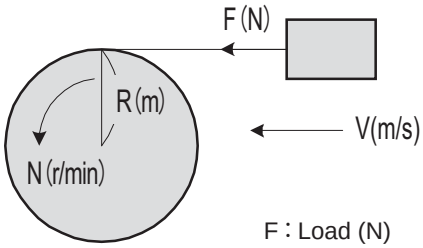

F : Load (N)

$$\therefore P = \frac{F \cdot \pi \cdot 2 \cdot R \cdot \frac{N}{60}}{1000} = \frac{2 \cdot \pi}{1000 \times 60} \cdot N \cdot F \cdot R \ (kW)$$

Since T = F • R

$$P = \frac{2 \cdot \pi}{1000 \times 60} \cdot N \cdot T = \frac{N \cdot T}{9550} \ (kW)$$

5. Acceleration Force F_A (N)

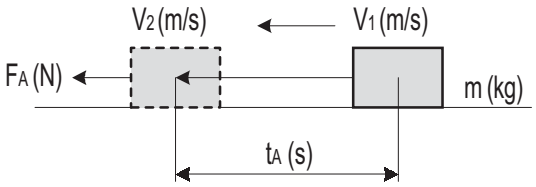

$$F_A = m \cdot \alpha = m \cdot \frac{V_2 - V_1}{t_A} \text{ (N)}$$

$$\alpha = m \cdot \frac{V_2 - V_1}{t_A}$$

m : Mass (kg)
α : Acceleration (m/s^2)
t_A : Acceleration Time (s)

6. Acceleration Torque T_A (Nm)

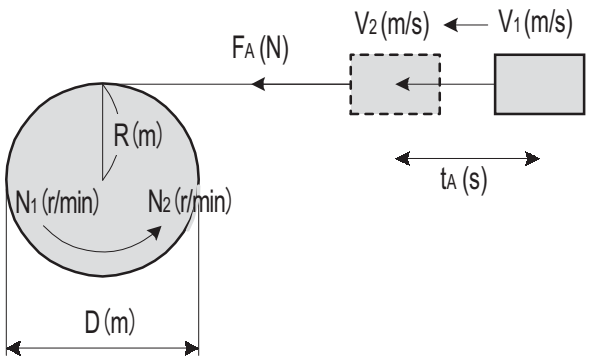

$$T_A = F_A \cdot R, \quad F_A = m \cdot \frac{V_2 - V_1}{t_A}$$

$$V_2 = \pi \cdot D \cdot \frac{N_2}{60}, \quad V_1 = \pi \cdot D \cdot \frac{N_1}{60},$$

$$D = 2 \cdot R$$

$$\therefore T_A = m \cdot \frac{\frac{\pi \cdot 2 \cdot R}{60}(N_2 - N_1)}{t_A} \cdot R$$

$$= \frac{2\pi \cdot m \cdot R}{60} \cdot \frac{N_2 - N_1}{t_A} \cdot R$$

$$= \frac{m \cdot R^2}{9.55} \cdot \frac{N_2 - N_1}{t_A} \text{ (N} \cdot \text{m)}$$

Since $m \cdot R^2$ is J (Moment of Inertia : kg-m^2)

$$T_A = \frac{J}{9.55} \cdot \frac{N_2 - N_1}{t_A} \text{ (N} \cdot \text{m)}$$

7. Synchronized Revolving Speed of AC Motor N_0 (r/min)

$$N_o = \frac{120 \cdot f}{P} \text{ (r/min)}$$

f : Power Supply Frequency (Hz)
P : No. of Motor Poles

8. Rated Revolving Speed of AC Motor N(r/min)

$$N = N_o(1 - S) \text{ (r/min)}$$

N_o : Synchronized Revolving Speed (r/min)
S : Slippage

Warranty

Warranty Period	The warranty period for the Products shall be 18 months after the commencement of delivery or 18 months after the shipment of the Products from the seller's works or 12 months from the Products coming into operation, whether comes first.
Warranty Condition	In Case that any problems, troubles or damages on the Products arise due to the defects in the Products during the above "Warranty Period" , although the Products are appropriately and properly installed in, connected or combined to the equipment or machines, or maintained in accordance with the maintenance manual and are properly operated under the conditions as described in the catalogue or otherwise as agreed upon in writing between the Seller and the Buyer or its customers, the Seller will provide, at its sole discretion, appropriate repair or replacement on the Products free of charge, except as stipulated in the "Exception for Warranty" as described below. However, in the event that the Products is installed in, connected or combined to or integrated into the equipment or machines, the Seller shall not reimburse the costs for removal or re-installation of the Products or other incidental costs related thereto and any lost opportunity, loss of profit or any other incidental or consequential losses or damages incurred by the Buyer or its customers.
Exception for Warranty	Notwithstanding the above warranty, the warranty as set forth herein shall not be applied to the problems, troubles or damages on the Products which are caused by: 1. installations, connections, combinations or integration of the Products in or to the other equipment or machines, which are rendered by any person or entity other than the Seller, 2. the insufficient maintenance or improper operation by the Buyer or its customers, such that the Product is not appropriately maintained in accordance with the maintenance manual provided or designated by the Seller, 3. the improper use or operation of the Products by the Buyer or its customers which are not informed to the Seller, including, without limitation, the Buyer's or its customers' operation of the Products not in conformity with the specifications, or use of the lubrication oil in the Products which is not recommended by the Seller, 4. troubles, problems or damages on any equipment or machines in or to which the Products are installed, connected or combined or installed, or any specifications particular to the Buyer or its customers.

⚠ SAFETY PRECAUTIONS

- Strictly observe the safety rules for the installation place and the equipment to use.
  (Industrial Safety and Health Law, Technical Standard for Electric Facilities, Extension Rules, Plant Explosion Guidelines, Building Standards Law, etc.)
- Carefully read the maintenance manual before use. If the maintenance manual is not on hand, make a request for one to the distributor at which you purchased the product or to our sales department. The maintenance manual should be sent to the actual user.
- Select an appropriate product that matches the operating environment and usage.
- Install a protective equipment on the machine side when the machine is used for transportation of passengers or for elevators, escalators, and dumbwaiters.
- When the machine is used for food processing equipment and others that are susceptible to oil, install an oil pan or other damage preventive devices in case of oil leakage due to failure or termination of service life.